GHS KITCHEN & WEIGHTROOM

GROSSMONT HIGH SCHOOL
1100 MURRAY DR, EL CAJON, CA 92020
GROSSMONT UNION HIGH SCHOOL

RUHNAU CLARKE ARCHITECTS

3775 TENTH STREET, RIVERSIDE CALIFORNIA 92501 (951) 684 4664 / 5751 PALMER WAY, SUITE C, CARLSBAD CALIFORNIA 92010 (760) 438 5899

LICENSED ARCHITECT ROGER CLARKE No. C-21340 Exp. 10-31-23 STATE OF CALIFORNIA

STAMPS

IDENTIFICATION STAMP
DIV. OF THE STATE ARCHITECT
APP: 04-120895 INC:
REVIEWED FOR
SS ☑ FLS ☑ ACS ☑
DATE: 06/27/2022

RUHNAU CLARKE ARCHITECTS

CONSULTANT BRANDING

CONTACT LIST

Owner
Grossmont High School Unified School District, Facilities Planning
1100 Murray Drive (PO Box 1043)
El Cajon, CA 91944
Phone: *619.644.8000*
Contact: *Katy Wright*
kwright@guhsd.net

Architect
Ruhnau Clarke Architects
5751 Palmer Way Suite C,
Carlsbad, CA 92010
Phone: 760.438.5899
Contact: *Chris Perez*
cperez@ruhnauclarke.com
Contact: *Roger Clarke*
rclarke@ruhnauclarke.com

Specifications
SPEC STUDIO
9783 E. Maplewood Ave.
Englewood, CO, 80111
Phone: *909.374.2011*
Contact: *Richard Gonser*
specstudio@icloud.com

Civil
Cross Civil Engineering
4653 Carmel Mtn. Rd.
San Diego, CA, 92130
Phone: *858.519.7783*
Contact: *Jeff Cross*
jeff@crosscivilengineering.com

Landscape
MM+LA ASSOCIATES
1982 White Birch Drive
Vista, CA, 92081
Phone: *760.525.2343*
Contact: *Brandt Maughan*
bmaughan@mmlandarc.com

Structural
KNA
9931 Murlands Blvd.
Irvine, CA, 92618
Phone: *949.462.3200*
Contact: *Larry Kaprielian*
lkaprielian@knastructural.com

Mechanical & Plumbing
MA Engineers
5160 Carroll Canyon Rd. Suite 200
San Diego, CA 92121
Phone: *858.200.0030*
Contact: *Roy C. Campbell*
rcampbell@ma-engr.com

Electrical
Johnson Consulting Engineers, Inc.
1287 Brookprinter Place Suite 300
Poway, CA,92064
Phone: *858.679.4030*
Contact: *John Frisbie*
jfrisbie@jce-inc.com

Food Service
Orness Design Group, Inc.
5955 Mira Mesa Blvd. Suite H
San Diego, CA,92121
Phone: *858.457.5955*
Contact: *Ken Relethford*
krelethford@ornessdesigngroup.com

TYPICAL ABBREVIATIONS

@	AT
&	AND
<	ANGLE
ACPL	ACOUSTIC PLASTER
ACT	ACOUSTIC TILE
AFF	ABOVE FINISHED FLOOR
BB	BULLETIN BOARD
BD	BOARD
BLKG	BLOCKING
BOS	BOTTOM OF STRUCTURE
CAB	CABINET
CEM	CEMENT
CF	CUBIC FEET
CJ	CONTROL JOINT
CL	CENTERLINE
CLF	CHAIN LINK FNECE
CLG	CEILING
CLR	CLEAR
CMU	CONCRETE MASONRY UNIT
COL	COLUMN
CONC	CONCRETE
CONT	CONTINUOUS
CPL	CEMENT PLASTER
CPT	CARPET
CSWK	CASEWORK
CT	CERAMIC TILE
DET	DETAIL
DF	DRINKING FOUNTAIN
DIM	DIMENSION
DL	DOOR LOUVER
DN	DOWN
DP	DEMOUNTABLE PARTITION
DR	DOOR
DRF	DOOR FRAME
DS	DOWN SPOUT
DSA	DIVISION OF STATE ARCHITECT
DWGS	DRAWINGS
(E)	EXISTING
EA	EACH
EJ	EXPANSION JOINT
ELEC	ELECTRIC
ELEV	ELEVATION
ENCL	ENCLOSURE
EP	EPOXY
EQ	EQUAL
EQUIP	EQUIPMENT
EW	EACH WAY
EWC	ELECTRIC WATER COOLER
EXP	EXPANSION/EXPOSED
EXT	EXTERIOR
FC	FINISH CEILING
FD	FLOOR DRAIN
FEC	FIRE EXTINGUISER CABINET
FF	FINISHED FLOOR / FACTORY FINISH
FFE	FURNITURE, FIXTURES & EQUIPMENT
FG	FINISHED GRADE
FHC	FIRE HOSE CABINET
FIN	FINISH
FLR	FLOOR
FOF	FACE OF FINISH
FOM	FACE OF MASONRY
FOS	FACE OF STUD
FRPF	FIREPROOF/FIREPROOFING
FS	FINISHED SURFACE
FURN	FURNISH/FURNITURE
GA	GAUGE
GALV	GALVANIZED
GB	GRAB BAR
GC	GENERAL CONTRACTOR
GL	GLASS
GLU-LAM:	GLUE LAMINATED
GPL	GYPSUM PLASTER
GWB	GYPSUM WALLBOARD
GWW	WATER RESISTANT GWB
H	HIGH
HDW	HARDWARE
HORIZ	HORIZONTAL
HR	HOUR
HSS	HOLLOW STRUCTURAL STEEL
HT	HEIGHT
ID	INSIDE DIAMETER
INSUL	INSULATION
INT	INTERIOR
JH	JOIST HANGER
JST	JOIST
JT	JOINT
LAM	LAMINATE
LT	LIGHT
LVR	LOUVER
MACH	MACHINE
MAX	MAXIMUM
MECH	MECHANICAL
MFR	MANUFACTURER
MH	MANHOLE
MIN	MINIMUM
ML	METAL LATHE
MO	MASONRY OPENING
MS	METAL STUD
MTD	MOUNTED
MTL	METAL
NIC	NOT IN CONTRACT
NO	NUMBER
NTS	NOT TO SCALE
O	ROUND
OC	ON CENTER
OD	OUTSIDE DIAMETER
OFCI	OWNER FURNISHED/ CONTRACTOR INSTALLED
OFOI	OWNER FURNISHED/ OWNER INSTALLED
OH	OPPOSITE HAND/ OVERHEAD
OPNG	OPENING
OPP	OPPOSITE
P	PAINT
PA	PLANTING AREA
PFIN	PRE FINISHED
PL	PLATE/PROPERTY LINE
PLAS	PLASTIC
PLWD	PLYWOOD
PSG	PAINT SEMI-GLOSS
PTD	PAINTED
PTN	PARTITION
R	RADIUS/RISER
RB	RUBBER BASE
RD	ROOF DRAIN
REF	REFERENCE
REINF	REINFORCED
REQD	REQUIRED
RO	ROUGH OPENING
RQMT	REQUIREMENT
RSLB	RESILIENT BASE
RT	RUBBER TREAD
RWL	RAIN WATER LEADER
SB	SPLASH BLOCK
SC	SOLID CORE
SHT	SHEET
SHTG	SHEATHING
SIM	SIMILAR
SM	SHEET METAL
SRF	SEAMLESS RESILIENT FLOORING
SS	SERVICE SINK/ STAINLESS STEEL
STD	STANDARD
STL	STEEL
STN	STAIN
STR	STRUCTURAL/STRUCTURE
SUSP	SUSPENDED
T	TILE / TEMPERED GLASS
TB	TACK BOARD
TC	TOP OF CONCRETE CURB
TEL	TELEPHONE
TEMP	TEMPERATURE
TJ	TOOLED JOINT
TOC	TOP OF CANOPY
TOP	TOP OF PARAPET
TOR	TOP OF ROOF
TOS	TOP OF STRUCTURE
TOW	TOP OF WALL
TW	TOP OF WALK
TYP	TYPICAL
UC	UNDER CUT/ UNDER COUNTER
UNO	UNLESS NOTED OTHERWISE
UOS	UNDERSIDE OF STRUCTURE
VC	VINYL COATED
VCT	VINYL COMPOSITION TILE
VERT	VERTICAL
VIF	VERIFIED IN FIELD
VSF	VINYL SHEET FLOORING
VT	VINYL TILE
VTR	VENT THROUGH ROOF
VWC	VINYL WALL COVERING
W/	WITH
WD	WOOD
WI	WOODWORK INSTITUTE
WIN	WINDOW
W/O	WITHOUT
WWF	WELD WIRE FABRIC

ARCHITECTURAL SYMBOLS

BUILDING SECTION
DIRECTION OF VIEW CUT
DIRECTION OF VIEW
VIEW ON SHEET
SHEET ON WHICH DETAIL OCCURS
SIM 1 A101

EXTERIOR ELEVATION
DIRECTION OF VIEW
VIEW ON SHEET
SHEET ON WHICH DETAIL OCCURS
SIM 1 A101

DETAIL REFERENCE TO DRAWINGS
VIEW ON SHEET
SHEET ON WHICH DETAIL OCCURS
DIRECTION OF VIEW
SIM 1 A101

ROOM TAG
ROOM NAME
ROOM NUMBER
SHEET ON WHICH INTERIOR ELEVATION OCCURS
INTERIOR ELEVATION VIEW
Room name 1 1001 9/A1-7.1 2 3 4

DOOR TAG
DOOR TAG — 101
DOOR RATING — 20 MIN.

WINDOW TAG
WINDOW TAG — 1t

KEYNOTE
CONSTRUCTION KEY NOTE
NUMBER
ASSOCIATED DETAIL REFERENCE
X.X X 1 A101 SIM

CASEWORK IDENTIFICATION:
DEPTH
HEIGHT
INDICATES SPECIAL CONDITION
W.I.C. NUMBER
LENGTH
LOCK
EXPLANATION OF SPECIAL CONDITION IF NEEDED
40 30 M 102 48 L M=REVERSE

GENERAL NOTES

1. THE CONTRACTOR IS SOLELY RESPONSIBLE FOR MEANS, METHODS, SEQUENCE, TECHNIQUES OR PROCEDURES NECESSARY FOR PERFORMING, SUPERINTENDING OR COORDINATING ALL PORTIONS OF THE WORK OF CONSTRUCTION IN ACCORDANCE WITH THE CONTRACT DOCUMENTS AND ANY HEALTH OR SAFETY PRECAUTIONS REQUIRED BY ANY REGULATORY AGENCIES.
2. THE CONTRACTOR SHALL COMPLY WITH CALIFORNIA FIRE CODE, CHAPTER 33 FOR FIRE SAFETY DURING CONSTRUCTION.
3. CONTRACTOR WILL BE REQUIRED TO PROVIDE AND INSTALL ALL EQUIPMENT AND RELATED ITEMS AS SHOWN IN THESE DOCUMENTS AND AS SPECIFIED. IT SHALL BE THE CONTRACTOR'S RESPONSIBILITY TO VERIFY ALL EXISTING CONDITIONS IN THE FIELD PRIOR TO BID AND TO DETERMINE THE WORK NECESSARY TO COMPLETE THE PROJECT.
4. ALL WORK SHALL CONFORM TO TITLE 24, CALIFORNIA CODE OF REGULATIONS (C.C.R.) AND SECTION 4-333.
5. CHANGES TO THE DIVISION OF THE STATE ARCHITECT-APPROVED DRAWINGS AND SPECIFICATIONS SHALL BE MADE BY ADDENDA OR CONSTRUCTION CHANGE DOCUMENTS FOR CHANGES TO THE STRUCTURAL, ACCESSIBILITY OR FIRE-SAFETY PORTIONS OF THE PROJECT. CHANGES SHALL BE SUBMITTED TO AND APPROVED BY DSA PRIOR TO COMMENCEMENT OF THE WORK SHOWN THEREON [CAC 4-338 (C)].
6. A PROJECT INSPECTOR, EMPLOYED BY THE DISTRICT (OWNER) AND APPROVED BY THE DIVISION OF THE STATE ARCHITECT, SHALL PROVIDE CONTINUOUS INSPECTION OF THE WORK. THE DUTIES OF THE INSPECTOR IS DEFINED IN SECTION 4-342, PART 1, TITLE 24, C.C.R.
7. THE ARCHITECT OF RECORD SHALL HAVE THE RIGHT TO MAKE FINAL JUDGMENTS RELATIVE TO SUBMITTAL DRAWING REVISIONS IN ORDER TO ENSURE COMPLIANCE WITH ENGINEERING STANDARDS, APPLICABLE CODES, AND ARCHITECTURAL INTENT.
8. CONTRACTOR SHALL VERIFY ALL DIMENSIONS AND LOCATIONS OF EXISTING CONDITIONS ON THE JOB SITE PRIOR TO THE START OF ANY WORK. NOTIFY THE ARCHITECT IMMEDIATELY OF ANY DISCREPANCIES BETWEEN ACTUAL FIELD CONDITIONS AND CONSTRUCTION DOCUMENTS. EXISTING CONDITIONS ARE INDICATED AS A RESULT OF INFORMATION SHOWN ON AVAILABLE DOCUMENTS. ANY DAMAGE TO EXISTING CONDITIONS IS THE SOLE RESPONSIBILITY OF THE CONTRACTOR.
9. THE EXISTENCE OR LOCATION OF ANY UNDERGROUND UTILITIES, PIPES, OR STRUCTURE SHOWN ON THESE PLANS WERE OBTAINED BY A SEARCH OF AVAILABLE RECORDS. TO THE BEST OF OUR KNOWLEDGE, EXISTING UTILITIES ARE AS SHOWN ON THESE PLANS. THE CONTRACTOR SHALL ASCERTAIN THE TRUE VERTICAL AND HORIZONTAL LOCATION AND SIZE OF ALL UNDERGROUND UTILITIES AND SHALL BE RESPONSIBLE FOR DAMAGE TO ANY PUBLIC OR PRIVATE UTILITIES SHOWN OR NOT SHOWN HEREON.
10. THE CONTRACTOR SHALL BE SOLELY RESPONSIBLE FOR ADEQUACY AND SAFETY OF THE DESIGN/ERECTION OF BRACING, SHORING, TEMPORARY SUPPORTS AND SCAFFOLDING.
11. UNDER NO CIRCUMSTANCE SHALL WORKING DIMENSIONS BE SCALED FROM PLANS, SECTIONS, OR DETAILS ON THE DRAWINGS.
12. ALL STANDARDS, MATERIALS AND WORKMANSHIP SHALL COMPLY WITH THE STATE BUILDING CODES, ORDINANCES, REGULATIONS, AND LAWS.
13. WHERE ANY CONFLICT OCCURS BETWEEN THE REQUIREMENTS OF FEDERAL, STATE AND LOCAL LAWS, CODES, ORDINANCES, RULES AND REGULATIONS, THE MOST STRINGENT SHALL GOVERN.
14. ITEMS MARKED "TYP." OR "TYPICAL" SHALL APPLY IN ALL CASES UNLESS SPECIFICALLY INDICATED OTHERWISE.
15. THE CONTRACTOR SHALL BE RESPONSIBLE FOR COORDINATION OF REQUIREMENTS BETWEEN THE DISCIPLINES (ARCHITECTURAL, STRUCTURAL, PLUMBING, MECHANICAL, AND ELECTRICAL, ETC.) AND BETWEEN DRAWING AND SPECIFICATION IN ORDER TO ENSURE THAT ALL ITEMS SHOWN IN RELATIONSHIP TO ONE ANOTHER OR SHOWN IN MULTIPLE LOCATIONS ARE IN AGREEMENT. THE CONTRACTOR SHALL IMMEDIATELY NOTIFY THE ARCHITECT REGARDING ANY DISCREPANCIES, ERRORS, OMISSIONS OR INCONSISTENCIES AND SHALL NOT PROCEED WITH THE WORK UNTIL CLARIFICATION HAS BEEN ISSUED BY THE ARCHITECT.
16. MAINTAIN THE INTEGRITY OF ALL EXISTING RATED ASSEMBLIES U.N.O.
17. GRADING PLANS DRAINAGE IMPROVEMENTS, ROAD & ACCESS REQUIREMENTS AND ENVIRONMENTAL HEALTH CONSIDERATIONS SHALL COMPLY WITH ALL LOCAL ORDINANCES. INSPECTOR OF RECORD (IOR CLASSIFICATION 2).
18. FABRICATION AND INSTALLATION OF DEFERRED SUBMITTALS ITEMS SHALL NOT BE STARTED UNTIL CONTRACTORS DRAWINGS, SPECIFICATIONS , AND ENGINEERING CLACULATION FOR THE ACTUAL SYSTEMS TO BE INSTALLED HAVE BEEN ACCEPTED AND SIGNED BY THE ARCHITECT OR STRCUTURAL ENGINEER AND APPROVED BY THE DSA. LIST DEFERRED SUBMITTAL ITEMS FOR THIS PROJECT.
19. A DSA ACCEOTED TESTING LABORATORY DIRECTLY EMPLOYED BY THE DISTRCIT (OWNER) SHALL CONDUCT ALL THE REQUIRED TESTS AND INSPECTIONS FOR THE PROJECT.
20. THE INTENT OF THESE DRAWINGS AND SPECIFCIATIONS IS THAT THE WORK OF THE ALTERATION, REHABILIATION OR RECONSTRUCTION IS TO BE IN ACCORDANCE WITH TITLE 24, CCR. SHOULD ANY EXISTING CONDITIONS SUCH AS DETERIORATION OR NONCOMPLYING CONSTRUCTION BE DISCOVERED WHICH IS NOT COVERED BY THE CONTRACT DOCUMENTS WHEREIN THE FINSIHED WORK WILL NOT COMLY WITH TITILE 24, CCR, A CONSTRUCTION CHANGE DOCUMENT (CCD), OR A SEPARATE SET OF PLANS AND SPECIFICATIONS, DETAILING AND SPECIFYING THE REQUIRES WORK SHALL BE SUBMITTED TO AND APPROVED BY DSA BEFORE PROCEEDING WITH THE WORK. (SECTION 4-317 (C), PART 1 , TITLE 24, CCR)

REGIONAL MAP

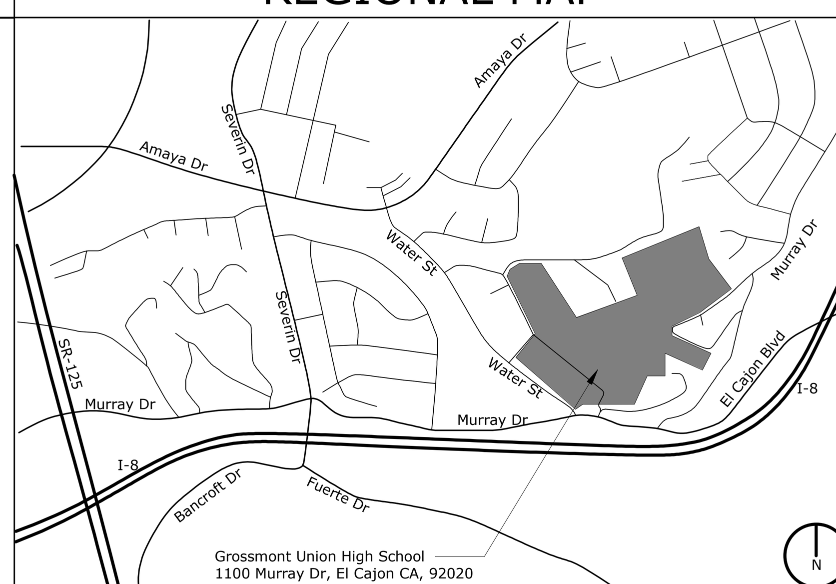

SITE MAP

APPLICABLE AGENCIES

STATE OF CALIFORNIA

DEPARTMENT OF GENERAL SERVICES
DIVISION OF THE STATE ARCHITECT
10920 VIA FRONTERA ROAD, STE. 300
SAN DIEGO, CA 92127
TEL: (858) 674-5400

COUNTY OF SAN DIEGO

DEPARTMENT OF ENVIRONMENTAL HEALTH
AND QUAILTY FOOD AND HOUSING DIVISION
P.O. BOX 12926 SAN DIEGO, CA 92112
TEL: (858) 505-6666

LOCAL FIRE AUTHORITY

HEARTLAND FIRE AND RESCUE
8054 ALLISON AVEUNE
LA MESA, CA 91942
TEL: (619) 667-1470

SHEET INDEX

GENERAL
T-1 TITLE SHEET & SHEET INDEX
SHEET COUNT: 1

CIVIL
C-1.0 GRADING AND DRAINAGE
C-1.1 GRADING AND DRAINAGE
C-1.2 GRADING AND DRAINAGE
C-2.0 UTILITY PLAN
C-3.0 CIVIL DETAILS
C-4.0 HORIZONTAL CONTROL PLAN
SHEET COUNT: 6

LANDSCAPE
LI-1 IRRIGATION PLAN
LI-2 IRRIGATION PLAN / LEGEND
LI-3 IRRIGATION DETAILS
LP-1 PLANTING PLAN
LP-2 PLANTING PLAN / LEGEND
LP-3 PLANTING DETAILS
SHEET COUNT: 6

ARCHITECTURE SITE
AS0.2 CODE / EGRESS SITE PLAN
AS0.3 ENLARGED EGRESS PLANS
AS-1.0 DEMOLITION SITE PLAN
AS-1.1 OVERALL SITE PLAN
AS-1.2 MODERNIZATION SITE PLAN
AS-1.3 ENLARGED SITE PLAN
ASD-1.0 SITE DETAILS
ASD-2.0 SITE DETAILS
ASD-3.0 SITE DETAILS
ASD-4.0 SITE DETAILS

ARCHITECTURE - BUILDING 900
A1-1.0 FLOOR PLAN AND RCP
A1-3.0 ROOF PLANS
A1-4.0 BUILDING ELEVATIONS
A1-5.0 BUILDING ELEVATIONS & SECTIONS
A1-5.1 BUILDING SECTIONS
A1-6.0 WALL SECTIONS
A1-7.0 ENLARGED RESTROOM PLANS & ELEVATIONS
A1-7.1 INTERIOR ELEVATIONS
A1-7.2 INTERIOR ELEVATIONS
A1-8.0 DOOR & WINDOW SCHEDULE

ARCHITECTURE - BUILDING 400
A2-1.0 NEW FOOD SERVICE FLOOR & CLG PLANS
A2-3.0 NEW FOOD SERVICE ROOF PLAN
A2-4.0 BUILDING ELEVATIONS
A2-5.0 BUILDING SECTIONS
A2-6.0 WALL SECTIONS
A2-7.0 ENLARGED PLAN & INTERIOR ELEVATIONS
A2-8.0 DOOR SCHEDULE & WINDOW TYPES

ARCHITECTURE DETAILS
AD-1.0 ACCESSIBILITY & SIGNAGE DETAILS
AD-2.0 WALL TYPES
AD-2.1 WALL DETAILS
AD-3.0 ROOF DETAILS
AD-3.1 ROOF DETAILS
AD-4.0 CEILING DETAILS
AD-4.1 CEILING DETAILS
AD-5.0 CASEWORK DETAILS
AD-6.0 DOOR DETAILS
AD-6.1 DOOR & WINDOW DETAILS
AD-6.2 DOOR & WINDOW DETAILS
AD-8.0 MISCELLANEOUS DETAILS
SHEET COUNT: 39

INTERIORS
ID-1.0 FINISHES PLAN / SCHED & CMF LEGEND
SHEET COUNT: 1

STRUCTURAL
S0-0.1 GENERAL NOTES
S0-0.2 GENERAL NOTES
S0-0.3 GENERAL NOTES
S0-1.1 TYPICAL CONCRETE DETAILS
S0-1.2 TYPICAL CONCRETE DETAILS
S0-1.3 TYPICAL MASONRY DETAILS
S0-1.4 TYPICAL STEEL DETAILS
S0-1.5 TYPICAL WOOD DETAILS
S0-1.6 TYPICAL WOOD DETAILS
S0-1.7 TYPICAL WOOD DETAILS
S0-1.8 TYPICAL WOOD DETAILS
S1-1.1 BUILDING 900 FOUNDATION PLAN
S1-3.1 BUILDING 900 ROOF FRAMING PLAN
S2-1.0 BUILDING 400 FOUNDATION & ROOF FRAMING PLANS
S2-1.1 CANOPY FRAMING DETAILS
S3-1.1 SHADE CANOPY DETAILS
SD-1.1 FOUNDATION DETAILS
SD-2.1 ROOF FRAMING DETAILS
SD-2.2 ROOF FRAMING DETAILS
SD-2.3 ROOF FRAMING DETAILS
SD-2.4 ROOF FRAMING DETAILS
SHEET COUNT: 21

MECHANICAL
M0-0.1 MECHANICAL GENERAL NOTES, LEGEND
M0-0.2 MECHANICAL SCHEDULES
M0-0.3 MECHANICAL TITLE-24
M0-0.4 MECHANICAL TITLE-24
M0-0.5 MECHANICAL TITLE-24
M0-5.1 MECHANICAL DETAILS
M0-5.2 MECHANICAL DETAILS
M0-5.3 MECHANICAL DETAILS
M0-6.1 MECHANICAL CONTROLS
M0-6.2 MECHANICAL CONTROLS
M0-6.3 MECHANICAL CONTROLS
M1-1.1 MECHANICAL WEIGHT ROOM ZONING FLOOR PLAN
M1-2.1 MECHANICAL WEIGHT ROOM FLOOR PLAN
M1-2.2 MECHANICAL WEIGHT ROOM ROOF PLAN
M2-1.1 MECHANICAL KITCHEN ZONING FLOOR PLAN
M2-2.1 MECHANICAL KITCHEN FLOOR PLAN
M2-2.2 MECHANICAL KITCHEN ROOF PLAN
SHEET COUNT: 17

PLUMBING
P0-0.1 PLUMBING GENERAL NOTES, LEGEND
P0-0.2 PLUMBING SCHEDULES
P0-1.1 PLUMBING SITE PLAN
P0-4.1 PLUMBING RISER DIAGRAMS
P0-4.2 PLUMBING RISER DIAGRAMS
P0-5.1 PLUMBING DETAILS
P1-2.1 PLUMBING WEIGHT ROOM DEMO & UNDERGROUND PLANS
P1-2.2 PLUMBING WEIGHT ROOM ROOF PLAN
P1-3.1 PLUMBING ENLARGED PLANS
P2-2.1 PLUMBING KITCHEN FLOOR PLAN
P2-2.2 PLUMBING KITCHEN FLOOR & ROOF PLAN
P2-3.1 PLUMBING ENLARGED PLANS
TOTAL SHEET COUNT: 12

ELECTRICAL
E1.0 ELECTRICAL SYMBOLS, ABBREVIATIONS & NOTES
E1.1 OVERALL SITE PLAN
E1.2 SITE ELECTRICAL DETAILS
E2.0 TITLE 24
E2.1 BLDG. 900 FLOOR PLAN - LIGHTING
E2.2 KITCHEN FLOOR PLAN - LIGHTING
E2.3 FIXTURE SCHEDULE
E2.4 LIGHTING CONTROL DIAGRAM
E2.5 EMERGENCY LIGHTING DETAILS
E2.6 LIGHTING DETAILS
E2.7 LIGHTING DETAILS
E2.8 LIGHTING CONTROL DIAGRAMS
E3.1 BLDG 900 FLOOR PLAN - POWER
E3.2 KITCHEN FLOOR PLAN - POWER
E3.3 POWER DETAILS
E4.0 COMMUNICATION LEGEND & NOTES
E4.1 BLDG 900 FLOOR PLAN - COMMUNICATIONS
E4.2 KITCHEN FLOOR PLAN - COMMUNICATIONS
E4.3 VOICE/DATA INFRASTRUCTURE RISER DIAGRAM AND DETAILS
E4.4 COMMUNICATION DETAILS
E4.5 COMMUNICATION DETAILS
E4.6 COMMUNICATION DETAILS
E4.7 COMMUNICATION DETAILS
E4.8 COMMUNICATION DETAILS
E4.9 AUDIO-VISUAL DETAILS
E4.10 AUDIO-VISUAL DETAILS
E5.1 BLDG 900 FLOOR PLAN - FIRE ALARM
E5.2 KITCHEN FLOOR PLAN - FIRE ALARM
E5.3 FIRE ALARM SCHEDULES AND RISER
E5.4 FIRE ALARM DETAILS AND CALCULATIONS
E6.1 BLDG 900 FLOOR PLAN - MECHANICAL
E6.2 BLDG 900 ROOF PLAN
E6.3 KITCHEN ROOF PLAN
E6.4 MECHANICAL SCHEDULE
E7.1 ONE- LINE DIAGRAM
E7.2 ONE - LINE DETAILS
E7.3 ONE- LINE DETAILS
E8.1 ELECTRICAL DETAILS
E9.1 PANEL SCHEDULES
E9.2 PANEL SCHEDULES
SHEET COUNT: 40

FOOD SERVICE
K 0 FOODSERVICE TITLE SHEET
K 1 FOODSERVICE FLOOR PLAN
K 2 FOODSERVICE EQUIPMENT SCHEDULE
K 3 FOODSERVICE ELECTRICAL ROUGH-INS
K 4 FOODSERVICE PLUMBING ROUGH-INS
K 5 FOODSERVICE UNDERGROUND
K 6 FOODSERVICE ELEVATIONS
K 7.1 FOODSERVICE SECTIONS
K 7.2 FOODSERVICE TYPICAL DETAILS
K 7.3 FOODSERVICE SEISMIC DETAILS
K 8.1 FOODSERVICE EXHAUST HOODS
K 8.2 FOODSERVICE EXHAUST HOODS
K 8.3 FOODSERVICE EXHAUST HOODS
K 8.4 FOODSERVICE EXHAUST HOODS
K 8.5 FOODSERVICE EXHAUST HOODS
K 8.6 FOODSERVICE EXHAUST HOODS
K 8.7 FOODSERVICE EXHAUST HOODS
K 9.1 FOODSERVICE EQUIPMENT WALK-INS
K 9.2 FOODSERVICE REFRIGERATION
SHEET COUNT: 19

TOTAL SHEET COUNT: 162

SCOPE OF WORK

THE PROPOSED SCOPE OF WORK INCLUDES THE DEMOLITION OF THE EXISTING CAFETERIA AND WEIGHT ROOM BUILDING. THE WORK WILL INCLUDE SELECT SITE DEMOLITION OF EXISTING HARDSCAPE AND PLANTER AREAS IN PREPARATION FOR THE NEW SCOPE OF WORK.

THE PROPOSED NEW WORK WILL INCLUDE A NEW APPROXIMATE 3,000 S.F. KITCHEN BUILDING WHICH WILL INCLUDE PREP AND SERVING LINES, COOLER FREEZER BOXES, AND DRY STORAGE, WITH FIRE ALARM SYSTEM. 720 SQFT CANOPY/CARPORT WILL BE PLACED ADJACENT TO THE NEW KITCHEN BUILDING FOR THE SITE ELECTRIC SERVICE CARTS.

THE PROJECT WILL ALSO INCLUDE A NEW APPROXIMATE 8,100 SF NEW WEIGHT ROOM AND CLASSROOM BUILDING, WITH FIRE ALARM SYSTEM. THIS BUILDING WILL INCLUDE A NEW WEIGHT ROOM, SPORT MEDICINE, OFFICE, RESTROOMS, REFLECTION ROOM, CLASSROOMS, STORAGE, AND PUBLICATIONS ROOM.

SITE IMPROVEMENTS TO SUPPORT THE NEW STRUCTURES WILL INCLUDE MINIUMUM CODE REQUIRED ADA PATH OF TRAVEL IMPROVMENTS. PROPOSED SITE IMPROVEMENTS INCLUDE NEW IRRIGATION AND PLANTING AREAS.

APPLICABLE CODES

PARTIAL LIST OF APPLICABLE CODES AS OF JANUARY 1, 2020*

2019 CALIFORNIA ADMINISTRATIVE CODE, PART 1, TITLE 24 C.C.R.

2019 CALIFORNIA BUILDING CODE (CBC), PART 2, TITLE 24 C.C.R.
(**2018** INTERNATIONAL BUILDING CODE VOLUMES 1-2 & **2019** CALIFORNIA AMENDMENTS)

2019 CALIFORNIA ELECTRICAL CODE (CEC), PART 3, TITLE 24 C.C.R.
(**2017** NATIONAL ELECTRICAL CODE AND **2019** CALIFORNIA AMENDMENTS)

2019 CALIFORNIA MECHANICAL CODE (CMC) PART 4, TITLE 24 C.C.R.
(**2018** UNIFORM MECHANICAL CODE AND **2019** CALIFORNIA AMENDMENTS)

2019 CALIFORNIA PLUMBING CODE (CPC), PART 5, TITLE 24 C.C.R.
(**2018** UNIFORM PLUMBING CODE AND **2019** CALIFORNIA AMENDMENTS)

2019 CALIFORNIA ENERGY CODE, PART 6, TITLE 24 C.C.R.

2019 CALIFORNIA FIRE CODE, PART 9, TITLE 24 C.C.R.
(**2018** INTERNATIONAL FIRE CODE AND **2019** CALIFORNIA AMENDMENTS)

2019 CALIFORNIA EXISTING BUILDING CODE (CEBC), PART 10, TITLE 24 C.C.R.
(**2018** INTERNATIONAL EXISTING BUILDING CODE AND **2019** CALIFORNIA AMENDMENTS)

2019 CALIFORNIA GREEN BUILDING STANDARDS CODE, PART 11, TITLE 24 C.C.R.

2019 CALIFORNIA REFERENCED STANDARDS, PART 12, TITLE 24 C.C.R.

TITLE 19 C.C.R., PUBLIC SAFETY, STATE FIRE MARSHAL REGULATIONS.
2016 ASME A17.1/CSA B44-13 SAFETY CODE FOR ELEVATORS AND ESCALATORS (PER **2019** CBC PART 2 CH 35)
NOTE: CAL/OSHA ELEVATOR UNIT ENFORCES CCR TITLE 8 & USES THE **2004** ASME A17.1 BY ADOPTATION

PARTIAL LIST OF APPLICABLE STANDARDS

NFPA 13	STANDARD FOR THE INSTALLATION OF SPRINKLER SYSTEMS (CA AMENDED)	**2016** EDITION
NFPA 14	STANDARD FOR THE INSTALLATION OF STANDPIPE AND HOSE SYSTEMS	**2016** EDITION
NFPA 17	STANDARD FOR DRY CHEMICAL EXTINGUISHING SYSTEMS	**2017** EDITION
NFPA 17A	STANDARD FOR WET CHEMICAL EXTINGUISHING SYSTEMS	**2017** EDITION
NFPA 20	STANDARD FOR THE INSTALLATION OF STATIONARY PUMPS FOR FIRE PROTECTION	**2016** EDITION
NFPA 22	STANDARD FOR WATER TANKS FOR PRIVATE FIRE PROTECTION	**2013** EDITION
NFPA 24	STANDARD FOR THE INSTALLATION OF PRIVATE FIRE MAINS & THEIR APPURTENANCES (CA AMENDED)	**2016** EDITION
NFPA 72	NATIONAL FIRE ALARM & SIGNALING CODE (CA AMENDED)	**2016** EDITION
NFPA 80	STANDARD FOR FIRE DOORS & OTHER OPENING PROTECTIVES	**2016** EDITION
NFPA 2001	STANDARD ON CLEAN AGENT FIRE EXTINGUISHING SYSTEMS (CA AMENDED)	**2015** EDITION
UL 300	STANDARD FOR FIRE TESTING OF FIRE EXTINGUISHING SYSTEMS FOR PROTECTION OF COMMERCIAL COOKING EQUIPMENT	**2005** (R2010)
UL 464	AUDIBLE SIGNALING DEVICES FOR FIRE ALARM & SIGNALING SYSTEMS, INCLUDING ACCESSORIES	**2003** EDITION
UL 521	STANDARD FOR HEAT DETECTORS FOR FIRE PROTECTIVE SIGNALING SYSTEMS	**1999** EDITION
UL 1971	STANDARD FOR SIGNALING DEVICES FOR THE HEARING IMPAIRED	**2002** (R2010)
ICC 300	STANDARD FOR BLEACHERS, FOLDING & TELESCOPIC SEATING, & GRANDSTANDS	**2017** EDITION

FOR A COMPLETE LIST OF APPLICABLE NFPA STANDARDS REFER TO **2019** CBC (SFM) CHAPTER 35 & CALIFORNIA FIRE CODE CHAPTER 80.

SEE CALIFORNIA BUILDING CODE CHAPTER 35 FOR STATE OF CALIFORNIA AMENDMENTS TO THE NFPA STANDARDS.

*ALL PARTS OF THE **2019** CALIFORNIA BUILDING CODE BECOME EFFECTIVE JANUARY 1, **2020** EXCEPT THE EFFECTIVE DATE FOR THE USE OF THE **2019** BUILDING ENERGY EFFICIENCY STANDARDS (TITLE 24, PART 1, CHAPTER 10) IS JANUARY 8, **2019** AND THE EFFECTIVE DATE FOR THE USE OF THE CALIFORNIA ADMINISTRATIVE CODE (TITLE 24, PART 1, CHAPTER 4) IS JANUARY 8, **2019**.

GHS KITCHEN & WEIGHTROOM: 06/13/2022 DSA SUBMITTAL

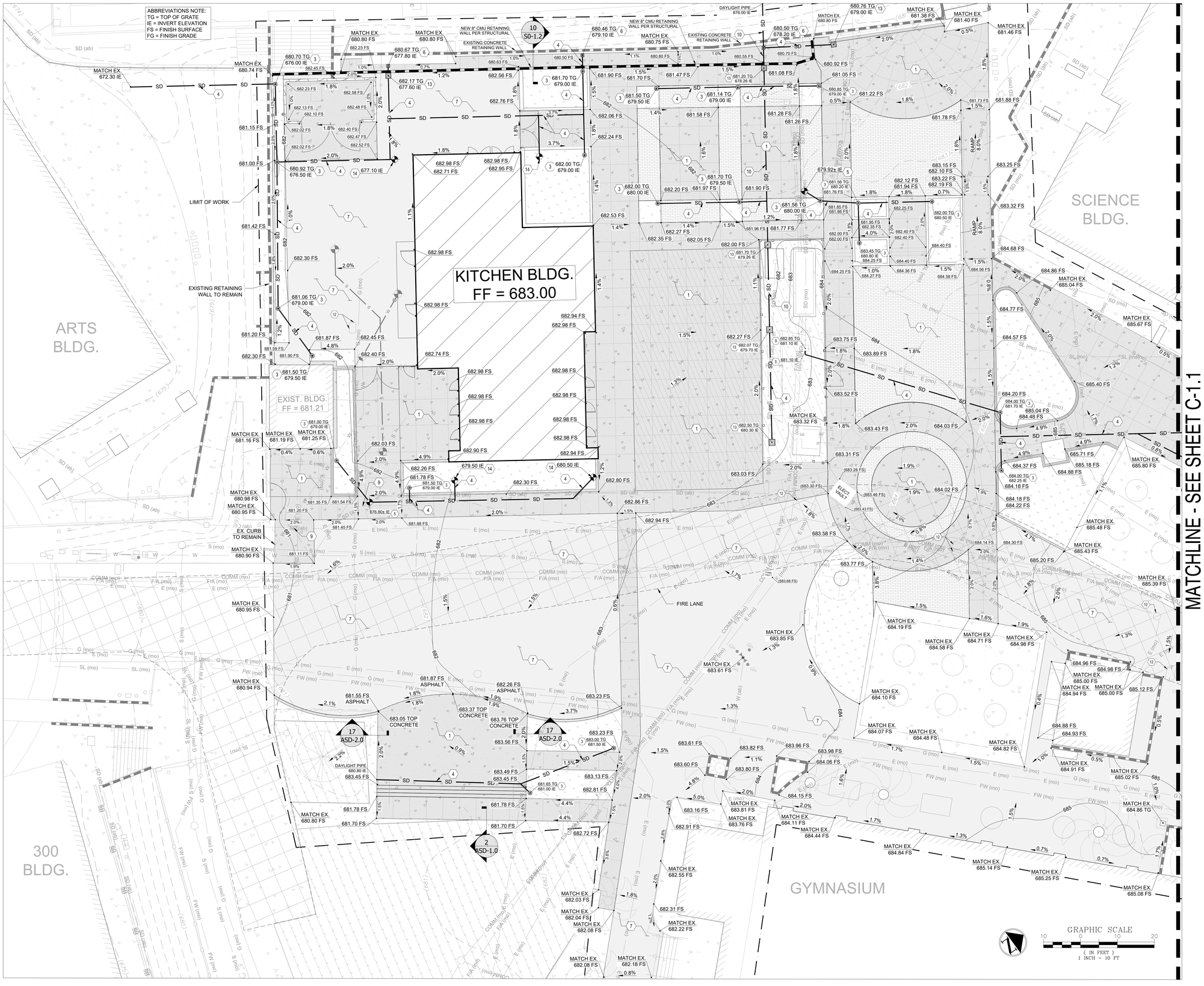

STAMPS

IDENTIFICATION STAMP
DIV. OF THE STATE ARCHITECT
APP: 04-120895 INC:
REVIEWED FOR
SS ☑ FLS ☑ ACS ☑
DATE: 06/27/2022

RUHNAU CLARKE ARCHITECTS

CROSS CIVIL ENGINEERING
4653 CARMEL MOUNTAIN RD. SUITE 308, SAN DIEGO, CA 92130

CONSULTANT BRANDING

CONSTRUCTION KEY NOTES

1. PROVIDE CONCRETE FLATWORK PER ARCHITECTURAL PLANS.
2. PROVIDE VARIABLE HEIGHT CONCRETE CURB PER CIVIL DETAIL 1 / C-3.0.
3. PROVIDE 9" LANDSCAPE AREA DRAIN (NDS OR EQUAL) WITH ATRIUM GRATE AND ALL FITTINGS.
4. PROVIDE 6" PVC (SDR-35) STORM DRAINAGE PIPING AND ALL FITTINGS. PROVIDE TRENCHING, BEDDING, AND BACKFILL PER CIVIL DETAIL 4 / C-3.0.
5. PROVIDE WYE CONNECTION TO EXISTING SITE STORM DRAIN.
6. PROVIDE 12 INCH STORM FLOOR DRAIN INLET, WITH ALL ADAPTERS, FITTINGS, WITH VANDAL PROOF GALVANIZED GRATE (SMITH OR EQUAL), PER DETAIL 3 / C-3.0.
7. PROVIDE 4" ASPHALT PAVING OVER 14" CLASS 2 AGGREGATE BASE PER CIVIL DETAIL 2 / C-3.0.
8. PROVIDE STORM DRAIN DOUBLE CLEANOUT TYPE-A PER DETAIL 5 / C-3.0.
9. PROTECT EXISTING STORM DRAIN IN PLACE.
10. PROVIDE 8" PVC (SDR-35) STORM DRAINAGE PIPING AND ALL FITTINGS. PROVIDE TRENCHING, BEDDING, AND BACKFILL PER CIVIL DETAIL 4 / C-3.0.
11. PROVIDE 12" PVC (SDR-35) STORM DRAINAGE PIPING AND ALL FITTINGS. PROVIDE TRENCHING, BEDDING, AND BACKFILL PER CIVIL DETAIL 4 / C-3.0.
12. ADJUST EXISTING UTILITY TO NEW FINISH SURFACE ELEVATION.
13. PROVIDE 18" PRECAST STORM BASIN WITH BOLT DOWN ADA COMPLIANT GRATE PER DETAIL 8 / SHEET C-3.0.
14. ROOF DRAIN POINT OF CONNECTION. SEE PLUMBING PLANS FOR CONTINUATION.

GENERAL NOTES

A. PROTECT IN PLACE ALL EXISTING IMPROVEMENTS, STRUCTURES AND UNDERGROUND UTILITIES WHICH ARE TO REMAIN. MAINTAIN UTILITY SERVICES TO ALL EXISTING FACILITIES AT ALL TIMES, UNLESS OTHERWISE SPECIFIED.

B. THE LOCATION AND EXISTENCE OF EXISTING UNDERGROUND UTILITIES SHOWN ON THE DRAWINGS WERE OBTAINED FROM RECORD DRAWINGS PROVIDED BY GUHSD. THE CONTRACTOR SHALL POTHOLE EXISTING UTILITIES AT POINTS OF CONNECTIONS AND ALL UTILITY CROSSINGS TO DETERMINE EXACT LOCATION PRIOR TO STARTING WORK.

C. THE CONTRACTOR SHALL NOTIFY DIGALERT (811) AT LEAST TWO DAYS PRIOR TO STARTING WORK AND SHALL ARRANGE FOR AND COORDINATE ANY UTILITY SHUT DOWNS. THE CONTRACTOR SHALL HIRE PRIVATE UTILITY LOCATION SERVICES IN LOCATIONS ONSITE NOT COVERED BY DIGALERT.

D. COORDINATE LOCATION OF ALL UNDERGROUND UTILITIES AND STORM DRAINS WITH LANDSCAPE TREE LOCATIONS, ELECTRICAL AND PLUMBING UTILITIES, AND OTHER INSTALLATIONS. REFER TO EACH DISCIPLINES PLANS FOR ADDITIONAL INFORMATION.

E. CONTRACTOR SHALL PROVIDE ALL EROSION CONTROL MEASURES DURING CONSTRUCTION, PER STATE CONSTRUCTION GENERAL PERMIT AND CAL GREEN BUILDING CODE.

CIVIL LEGEND

- PROPOSED CONCRETE PAVING
- PROPOSED STAMPED CONCRETE PAVING
- PROPOSED TEXTURED CONCRETE PAVING
- PROPOSED ASPHALT
- PROPOSED LANDSCAPE AREA
- EXISTING LANDSCAPE AREA TO REMAIN
- PROPOSED SPOT ELEVATION — 21.70 FS
- PROPOSED STORM DRAIN — SD
- PROPOSED STORM DRAIN INLET
- PROPOSED CMU RETAINING WALL
- EXISTING CMU RETAINING WALL
- EXISTING CONTOUR — (100)
- EXISTING SEWER PIPING — S
- EXISTING WATER PIPING — W
- EXISTING STORM PIPING — SD
- EXISTING GAS PIPING — G

GHS KITCHEN & WEIGHTROOM MOD: 06.21.22 - DSA Submittal

PROJECT No. :1-30-55
11/8/2021 2:47:06 PM

DRAWN BY: CHECKED BY:

ISSUE No.	DATE	DESCRIPTION	REVISION No.	DATE	DESCRIPTION
ISSUE No.	DATE	DESCRIPTION	REVISION No.	DATE	DESCRIPTION
ISSUE No.	DATE	DESCRIPTION	REVISION No.	DATE	DESCRIPTION
ISSUE No.	DATE	DESCRIPTION	REVISION No.	DATE	DESCRIPTION

RUHNAUCLARKE.COM
3775 TENTH STREET, RIVERSIDE CALIFORNIA 92501 (951) 684 4664 / 5751 PALMER WAY, SUITE C, CARLSBAD CALIFORNIA 92010 (760) 438 5899

GHS KITCHEN & WEIGHTROOM MOD
GROSSMONT HIGH SCHOOL
1100 MURRAY DR, EL CAJON, CA 92020
GROSSMONT UNION HIGH SCHOOL

GRADING AND DRAINAGE

C-1.0

1-30-55

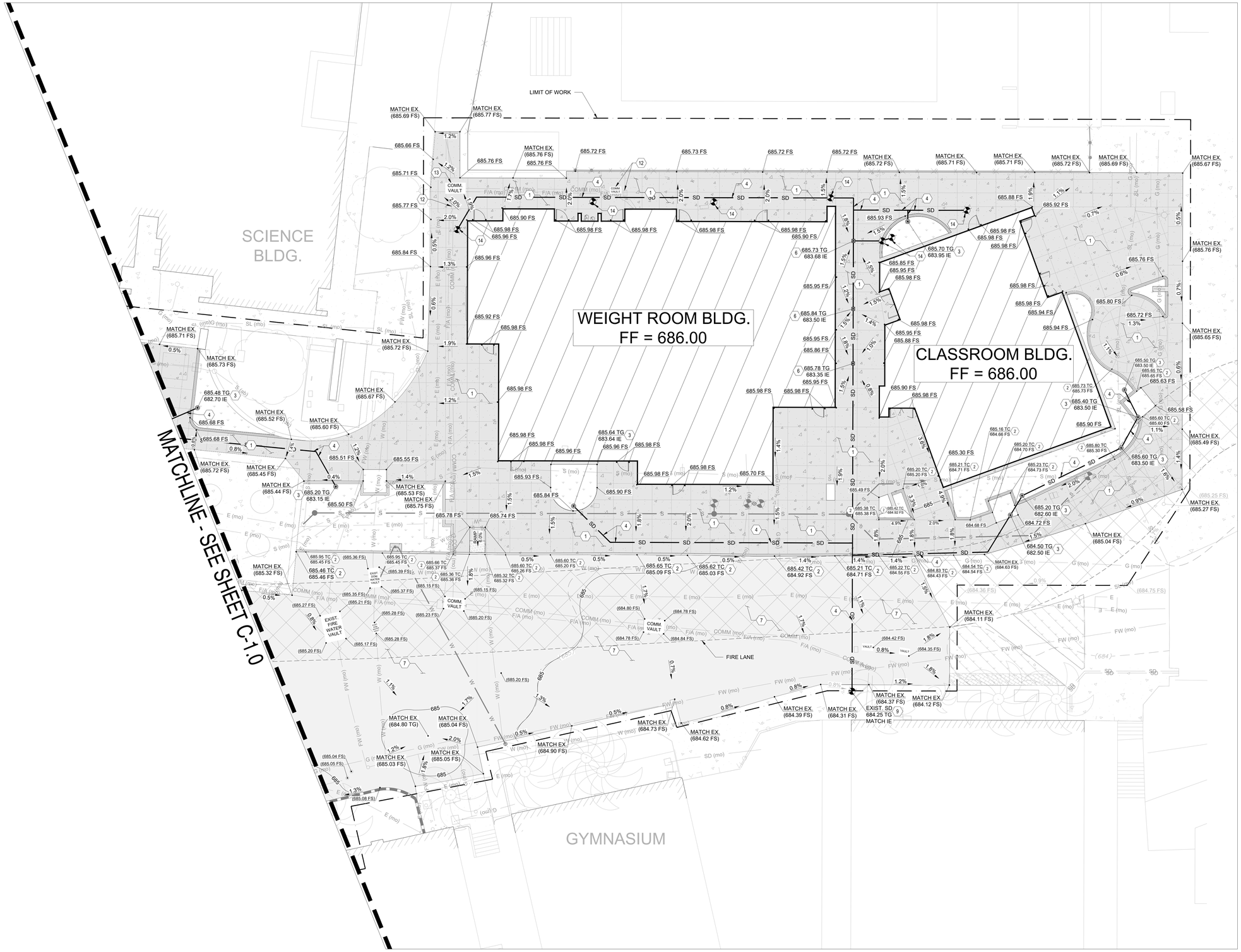

STAMPS

IDENTIFICATION STAMP
DIV. OF THE STATE ARCHITECT
APP: 04-120895 INC:
REVIEWED FOR
SS ☑ FLS ☑ ACS ☑
DATE: 06/27/2022

RUHNAU CLARKE ARCHITECTS

CROSS CIVIL ENGINEERING
4653 CARMEL MOUNTAIN RD. SUITE 308, SAN DIEGO, CA 92130
CONSULTANT BRANDING

CONSTRUCTION KEY NOTES

1. PROVIDE CONCRETE FLATWORK PER ARCHITECTURAL PLANS.
2. PROVIDE VARIABLE HEIGHT CONCRETE CURB PER CIVIL DETAIL 1 / C-3.0.
3. PROVIDE 9" LANDSCAPE AREA DRAIN (NDS OR EQUAL) WITH ATRIUM GRATE AND ALL FITTINGS.
4. PROVIDE 6" PVC (SDR-35) STORM DRAINAGE PIPING AND ALL FITTINGS. PROVIDE TRENCHING, BEDDING, AND BACKFILL PER CIVIL DETAIL 4 / C-3.0.
5. PROVIDE WYE CONNECTION TO EXISTING SITE STORM DRAIN.
6. PROVIDE 12 INCH STORM FLOOR DRAIN INLET, WITH ALL ADAPTERS, FITTINGS, WITH VANDAL PROOF GALVANIZED GRATE (SMITH OR EQUAL), PER DETAIL 3 / C-3.0.
7. PROVIDE 4" ASPHALT PAVING OVER 14" CLASS 2 AGGREGATE BASE PER CIVIL DETAIL 2 / C-3.0.
8. PROVIDE STORM DRAIN DOUBLE CLEANOUT TYPE-A PER DETAIL 5 / C-3.0.
9. PROTECT EXISTING STORM DRAIN IN PLACE.
10. PROVIDE 8" PVC (SDR-35) STORM DRAINAGE PIPING AND ALL FITTINGS. PROVIDE TRENCHING, BEDDING, AND BACKFILL PER CIVIL DETAIL 4 / C-3.0.
11. PROVIDE 12" PVC (SDR-35) STORM DRAINAGE PIPING AND ALL FITTINGS. PROVIDE TRENCHING, BEDDING, AND BACKFILL PER CIVIL DETAIL 4 / C-3.0.
12. ADJUST EXISTING UTILITY TO NEW FINISH SURFACE ELEVATION.
13. PROVIDE 18" PRECAST STORM BASIN WITH BOLT DOWN ADA COMPLIANT GRATE PER DETAIL 8 / SHEET C-3.0.
14. ROOF DRAIN POINT OF CONNECTION. SEE PLUMBING PLANS FOR CONTINUATION.

GENERAL NOTES

A. PROTECT IN PLACE ALL EXISTING IMPROVEMENTS, STRUCTURES AND UNDERGROUND UTILITIES WHICH ARE TO REMAIN. MAINTAIN UTILITY SERVICES TO ALL EXISTING FACILITIES AT ALL TIMES, UNLESS OTHERWISE SPECIFIED.

B. THE LOCATION AND EXISTENCE OF EXISTING UNDERGROUND UTILITIES SHOWN ON THE DRAWINGS WERE OBTAINED FROM RECORD DRAWINGS PROVIDED BY GUHSD. THE CONTRACTOR SHALL POTHOLE EXISTING UTILITIES AT POINTS OF CONNECTIONS AND ALL UTILITY CROSSINGS TO DETERMINE EXACT LOCATION PRIOR TO STARTING WORK.

C. THE CONTRACTOR SHALL NOTIFY DIGALERT (811) AT LEAST TWO DAYS PRIOR TO STARTING WORK AND SHALL ARRANGE FOR AND COORDINATE ANY UTILITY SHUT DOWNS. THE CONTRACTOR SHALL HIRE PRIVATE UTILITY LOCATION SERVICES IN LOCATIONS ONSITE NOT COVERED BY DIGALERT.

D. COORDINATE LOCATION OF ALL UNDERGROUND UTILITIES AND STORM DRAINS WITH LANDSCAPE TREE LOCATIONS, ELECTRICAL AND PLUMBING UTILITIES, AND OTHER INSTALLATIONS. REFER TO EACH DISCIPLINES PLANS FOR ADDITIONAL INFORMATION.

E. CONTRACTOR SHALL PROVIDE ALL EROSION CONTROL MEASURES DURING CONSTRUCTION, PER STATE CONSTRUCTION GENERAL PERMIT AND CAL GREEN BUILDING CODE.

CIVIL LEGEND

- PROPOSED CONCRETE PAVING
- PROPOSED STAMPED CONCRETE PAVING
- PROPOSED TEXTURED CONCRETE PAVING
- PROPOSED ASPHALT
- PROPOSED LANDSCAPE AREA
- EXISTING LANDSCAPE AREA TO REMAIN
- PROPOSED SPOT ELEVATION — 21.70 FS
- PROPOSED STORM DRAIN — SD
- PROPOSED STORM DRAIN INLET
- PROPOSED CMU RETAINING WALL
- EXISTING CMU RETAINING WALL
- EXISTING CONTOUR — (100)
- EXISTING SEWER PIPING — S
- EXISTING WATER PIPING — W
- EXISTING STORM PIPING — SD
- EXISTING GAS PIPING — G

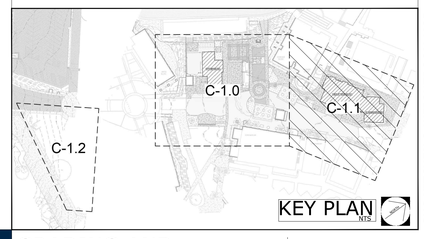

GHS KITCHEN & WEIGHTROOM MOD: 06.21.22 - DSA Submittal

PROJECT No. :1-30-55
11/8/2021 2:47:08 PM

DRAWN BY: ____ CHECKED BY: ____

ISSUE No.	DATE	DESCRIPTION	REVISION No.	DATE	DESCRIPTION
ISSUE No.	DATE	DESCRIPTION	REVISION No.	DATE	DESCRIPTION
ISSUE No.	DATE	DESCRIPTION	REVISION No.	DATE	DESCRIPTION
ISSUE No.	DATE	DESCRIPTION	REVISION No.	DATE	DESCRIPTION

RUHNAUCLARKE.COM
3775 TENTH STREET, RIVERSIDE CALIFORNIA 92501 (951) 684 4664 / 5751 PALMER WAY, SUITE C, CARLSBAD CALIFORNIA 92010 (760) 438 5899

GHS KITCHEN & WEIGHTROOM MOD
GROSSMONT HIGH SCHOOL
1100 MURRAY DR, EL CAJON, CA 92020
GROSSMONT UNION HIGH SCHOOL

GRADING AND DRAINAGE

C-1.1

1-30-55

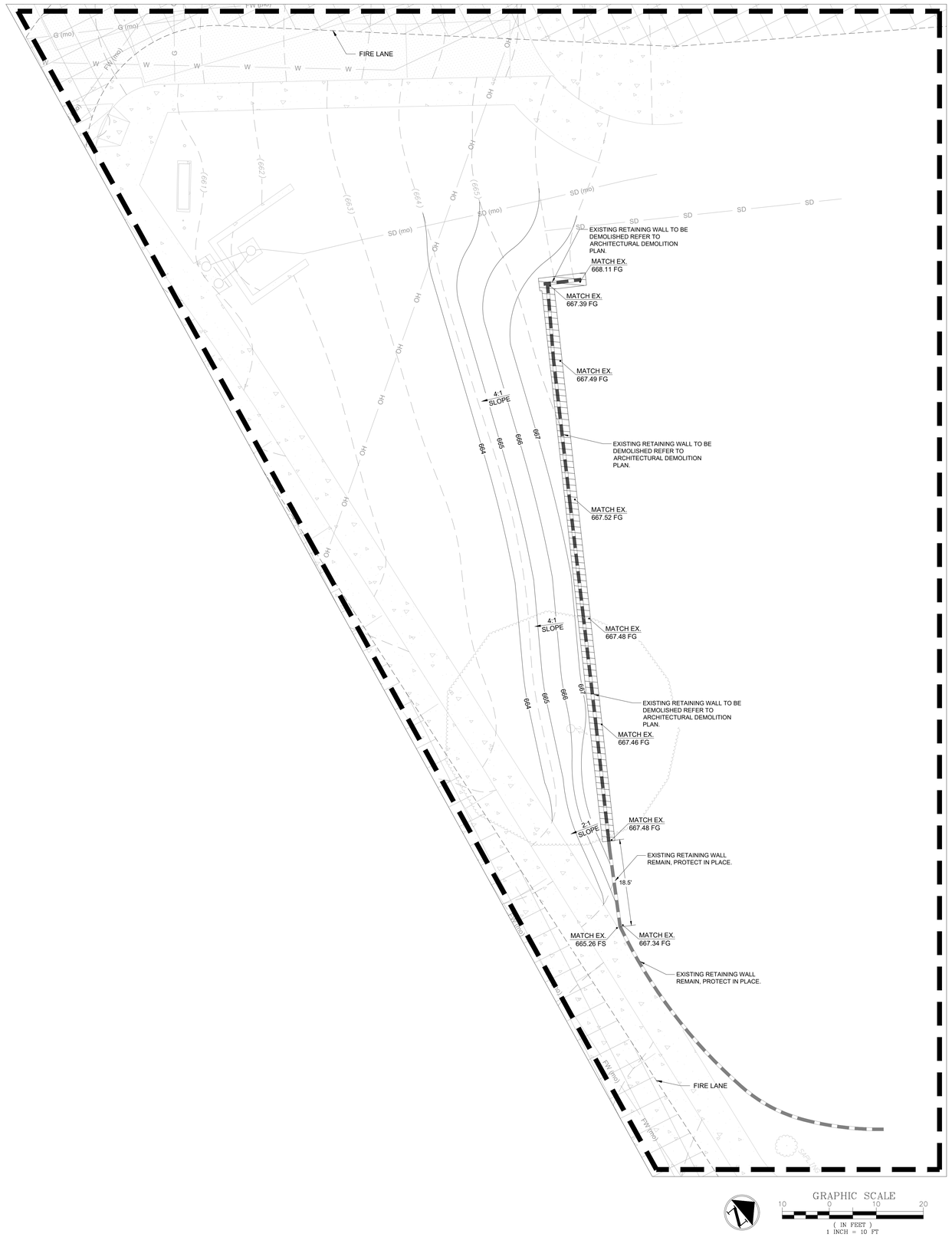

STAMPS

IDENTIFICATION STAMP
DIV. OF THE STATE ARCHITECT
APP: 04-120895 INC:
REVIEWED FOR
SS ☑ FLS ☑ ACS ☑
DATE: 06/27/2022

RUHNAU CLARKE ARCHITECTS

CROSS CIVIL ENGINEERING
4653 CARMEL MOUNTAIN RD. SUITE 308, SAN DIEGO, CA 92130

CONSULTANT BRANDING

CONSTRUCTION KEY NOTES

1. PROVIDE CONCRETE FLATWORK PER ARCHITECTURAL PLANS.
2. PROVIDE VARIABLE HEIGHT CONCRETE CURB PER CIVIL DETAIL 1 / C-3.0.
3. PROVIDE 9" LANDSCAPE AREA DRAIN (NDS OR EQUAL) WITH ATRIUM GRATE AND ALL FITTINGS.
4. PROVIDE 6" PVC (SDR-35) STORM DRAINAGE PIPING AND ALL FITTINGS. PROVIDE TRENCHING, BEDDING, AND BACKFILL PER CIVIL DETAIL 4 / C-3.0.
5. PROVIDE WYE CONNECTION TO EXISTING SITE STORM DRAIN.
6. PROVIDE 12 INCH STORM FLOOR DRAIN INLET, WITH ALL ADAPTERS, FITTINGS, WITH VANDAL PROOF GALVANIZED GRATE (SMITH OR EQUAL), PER DETAIL 3 / C-3.0.
7. PROVIDE 4" ASPHALT PAVING OVER 14" CLASS 2 AGGREGATE BASE PER CIVIL DETAIL 2 / C-3.0.
8. PROVIDE STORM DRAIN DOUBLE CLEANOUT TYPE-A PER DETAIL 5 / C-3.0.
9. PROTECT EXISTING STORM DRAIN IN PLACE.
10. PROVIDE 8" PVC (SDR-35) STORM DRAINAGE PIPING AND ALL FITTINGS. PROVIDE TRENCHING, BEDDING, AND BACKFILL PER CIVIL DETAIL 4 / C-3.0.
11. PROVIDE 12" PVC (SDR-35) STORM DRAINAGE PIPING AND ALL FITTINGS. PROVIDE TRENCHING, BEDDING, AND BACKFILL PER CIVIL DETAIL 4 / C-3.0.
12. ADJUST EXISTING UTILITY TO NEW FINISH SURFACE ELEVATION.
13. PROVIDE 18" PRECAST STORM BASIN WITH BOLT DOWN ADA COMPLIANT GRATE PER DETAIL 8 / SHEET C-3.0.
14. ROOF DRAIN POINT OF CONNECTION. SEE PLUMBING PLANS FOR CONTINUATION.

GENERAL NOTES

A. PROTECT IN PLACE ALL EXISTING IMPROVEMENTS, STRUCTURES AND UNDERGROUND UTILITIES WHICH ARE TO REMAIN. MAINTAIN UTILITY SERVICES TO ALL EXISTING FACILITIES AT ALL TIMES, UNLESS OTHERWISE SPECIFIED.

B. THE LOCATION AND EXISTENCE OF EXISTING UNDERGROUND UTILITIES SHOWN ON THE DRAWINGS WERE OBTAINED FROM RECORD DRAWINGS PROVIDED BY GUHSD. THE CONTRACTOR SHALL POTHOLE EXISTING UTILITIES AT POINTS OF CONNECTIONS AND ALL UTILITY CROSSINGS TO DETERMINE EXACT LOCATION PRIOR TO STARTING WORK.

C. THE CONTRACTOR SHALL NOTIFY DIGALERT (811) AT LEAST TWO DAYS PRIOR TO STARTING WORK AND SHALL ARRANGE FOR AND COORDINATE ANY UTILITY SHUT DOWNS. THE CONTRACTOR SHALL HIRE PRIVATE UTILITY LOCATION SERVICES IN LOCATIONS ONSITE NOT COVERED BY DIGALERT.

D. COORDINATE LOCATION OF ALL UNDERGROUND UTILITIES AND STORM DRAINS WITH LANDSCAPE TREE LOCATIONS, ELECTRICAL AND PLUMBING UTILITIES, AND OTHER INSTALLATIONS. REFER TO EACH DISCIPLINES PLANS FOR ADDITIONAL INFORMATION.

E. CONTRACTOR SHALL PROVIDE ALL EROSION CONTROL MEASURES DURING CONSTRUCTION, PER STATE CONSTRUCTION GENERAL PERMIT AND CAL GREEN BUILDING CODE.

CIVIL LEGEND

- PROPOSED CONCRETE PAVING
- PROPOSED STAMPED CONCRETE PAVING
- PROPOSED TEXTURED CONCRETE PAVING
- PROPOSED ASPHALT
- PROPOSED LANDSCAPE AREA
- EXISTING LANDSCAPE AREA TO REMAIN
- PROPOSED SPOT ELEVATION — 21.70 FS
- PROPOSED STORM DRAIN — SD
- PROPOSED STORM DRAIN INLET
- PROPOSED CMU RETAINING WALL
- EXISTING CMU RETAINING WALL
- EXISTING CONTOUR — (100)
- EXISTING SEWER PIPING — S
- EXISTING WATER PIPING — W
- EXISTING STORM PIPING — SD
- EXISTING GAS PIPING — G

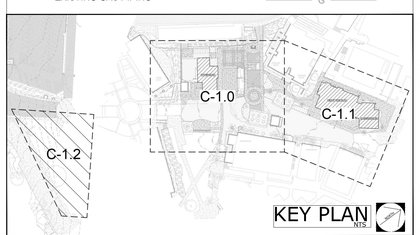

GHS KITCHEN & WEIGHTROOM MOD: 06.21.22 - DSA Submittal

PROJECT No. :1-30-55
11/8/2021 2:47:06 PM

DRAWN BY: CHECKED BY:

ISSUE No.	DATE	DESCRIPTION	REVISION No.	DATE	DESCRIPTION
ISSUE No.	DATE	DESCRIPTION	REVISION No.	DATE	DESCRIPTION
ISSUE No.	DATE	DESCRIPTION	REVISION No.	DATE	DESCRIPTION
ISSUE No.	DATE	DESCRIPTION	REVISION No.	DATE	DESCRIPTION

RUHNAUCLARKE.COM
3775 TENTH STREET, RIVERSIDE CALIFORNIA 92501 (951) 684 4664 / 5751 PALMER WAY, SUITE C, CARLSBAD CALIFORNIA 92010 (760) 438 5899

GHS KITCHEN & WEIGHTROOM MOD
GROSSMONT HIGH SCHOOL
1100 MURRAY DR, EL CAJON, CA 92020
GROSSMONT UNION HIGH SCHOOL

GRADING AND DRAINAGE

C-1.2

1-30-55

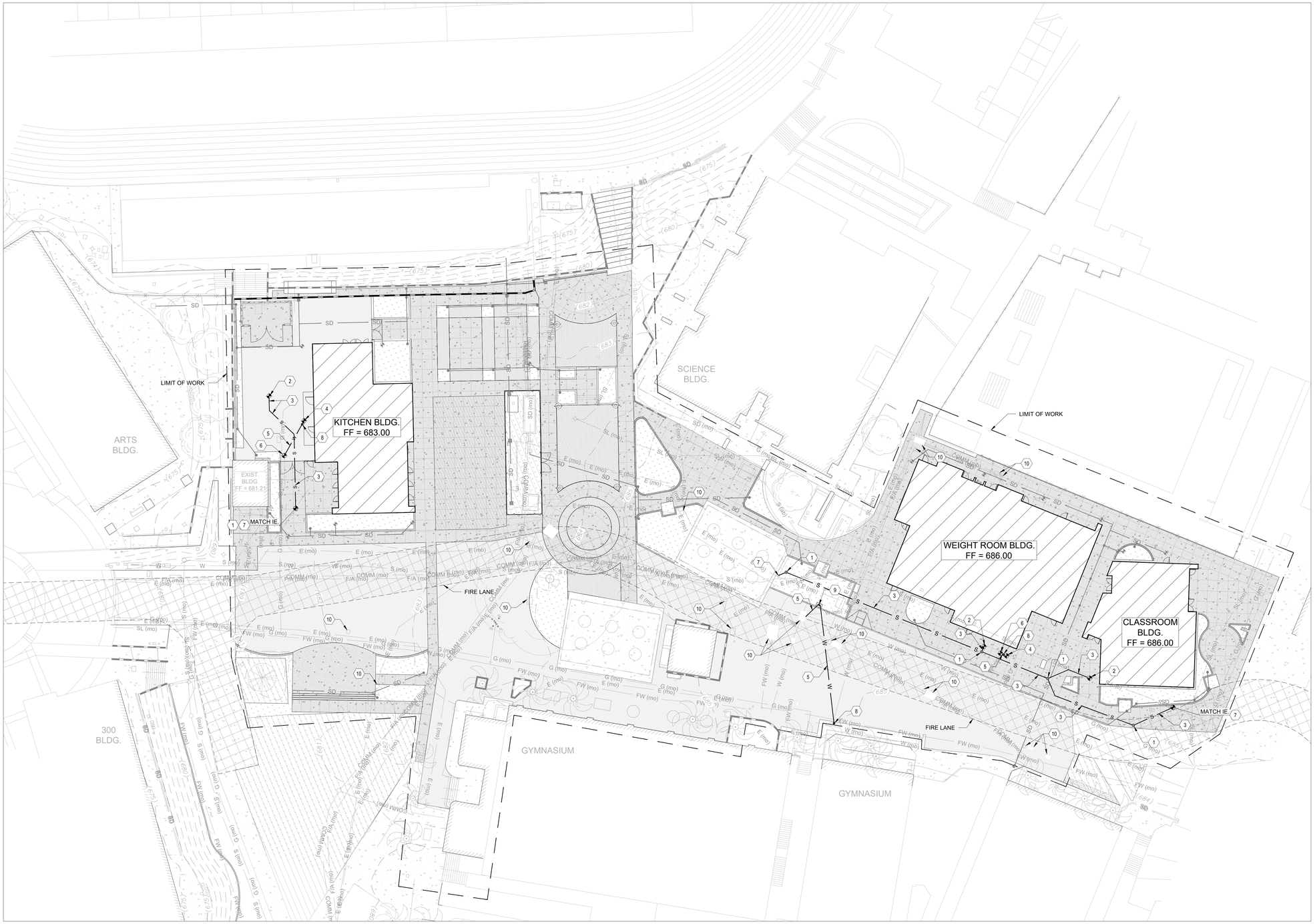

GRAPHIC SCALE
20 0 20 40
(IN FEET)
1 INCH = 20 FT

STAMPS

IDENTIFICATION STAMP
DIV. OF THE STATE ARCHITECT
APP: 04-120895 INC:
REVIEWED FOR
SS ☑ FLS ☑ ACS ☑
DATE: 06/27/2022

CROSS CIVIL ENGINEERING
4653 CARMEL MOUNTAIN RD. SUITE 308, SAN DIEGO, CA 92130

CONSULTANT BRANDING

RUHNAU CLARKE ARCHITECTS

CONSTRUCTION KEY NOTES

1. PROVIDE TWO-WAY SEWER CLEANOUT (ONE IN EACH DIRECTION), PER CIVIL DETAIL 5 / C-3.0.
2. SEWER POINT OF CONNECTION, SEE PLUMBING PLANS FOR CONTINUATION.
3. PROVIDE 4" SDR-35 PVC SEWER PIPING WITH TRENCHING, BEDDING, AND BACKFILL PER CIVIL DETAIL 6 / C-3.0. PROVIDE 2% SLOPE ON ALL SEWER PIPING.
4. DOMESTIC WATER POINT OF CONNECTION, SEE PLUMBING PLANS FOR CONTINUATION.
5. PROVIDE 2" SCHEDULE 80 PVC WATER PIPING WITH TRENCHING, BEDDING, AND BACKFILL PER CIVIL DETAIL 7 / C-3.0.
6. PROVIDE CONNECTION TO EXISTING SITE WATER PIPING WITH ALL REQUIRED FITTINGS.
7. PROVIDE CONNECTION TO EXISTING SITE SEWER PIPING WITH ALL REQUIRED FITTINGS AND MATCH INVERT ELEVATIONS.
8. PROVIDE DOMESTIC WATER GATE VALVE (SHUT OFF) TO BUILDING WITH GATE VALVE CAP AND ALL APPURTENANCES.
9. PROVIDE 2" WATER BACKFLOW PREVENTER PER CIVIL DETAIL 9 / C-3.0.
10. ADJUST EXISTING UTILITY BOX OR HANDHOLE TO MATCH NEW FINISH SURFACE ELEVATION.

GENERAL NOTES

A. PROTECT IN PLACE ALL EXISTING IMPROVEMENTS, STRUCTURES AND UNDERGROUND UTILITIES WHICH ARE TO REMAIN. MAINTAIN UTILITY SERVICES TO ALL EXISTING FACILITIES AT ALL TIMES, UNLESS OTHERWISE SPECIFIED.

B. THE LOCATION AND EXISTENCE OF EXISTING UNDERGROUND UTILITIES SHOWN ON THE DRAWINGS WERE OBTAINED FROM RECORD DRAWINGS PROVIDED BY GUHSD. THE CONTRACTOR SHALL POTHOLE EXISTING UTILITIES AT POINTS OF CONNECTIONS AND ALL UTILITY CROSSINGS TO DETERMINE EXACT LOCATION PRIOR TO STARTING WORK.

C. THE CONTRACTOR SHALL NOTIFY DIGALERT (811) AT LEAST TWO DAYS PRIOR TO STARTING WORK AND SHALL ARRANGE FOR AND COORDINATE ANY UTILITY SHUT DOWNS. THE CONTRACTOR SHALL HIRE PRIVATE UTILITY LOCATION SERVICES IN LOCATIONS ONSITE NOT COVERED BY DIGALERT.

D. COORDINATE LOCATION OF ALL UNDERGROUND UTILITIES AND STORM DRAINS WITH LANDSCAPE TREE LOCATIONS, ELECTRICAL AND PLUMBING UTILITIES, AND OTHER INSTALLATIONS. REFER TO EACH DISCIPLINES PLANS FOR ADDITIONAL INFORMATION.

E. CONTRACTOR SHALL PROVIDE ALL EROSION CONTROL MEASURES DURING CONSTRUCTION, PER STATE CONSTRUCTION GENERAL PERMIT AND CAL GREEN BUILDING CODE.

F. VIDEO INSPECT AND JET CLEAN ALL SEWER AND STORM DRAIN LINES WITHIN PROJECT LIMIT.

CIVIL LEGEND

POINT OF CONNECTION	
PROPOSED SEWER CLEANOUT	
PROPOSED GATE VALVE	
PROPOSED SEWER	S
PROPOSED WATER	W
EXISTING SEWER PIPING	S
EXISTING WATER PIPING	W
EXISTING STORM PIPING	SD
EXISTING GAS PIPING	G

GHS KITCHEN & WEIGHTROOM MOD: 06.21.22 - DSA Submittal

PROJECT No. :1-30-55
11/8/2021 2:47:06 PM

DRAWN BY: CHECKED BY:

ISSUE No.	DATE	DESCRIPTION	REVISION No.	DATE	DESCRIPTION
ISSUE No.	DATE	DESCRIPTION	REVISION No.	DATE	DESCRIPTION
ISSUE No.	DATE	DESCRIPTION	REVISION No.	DATE	DESCRIPTION
ISSUE No.	DATE	DESCRIPTION	REVISION No.	DATE	DESCRIPTION

RUHNAUCLARKE.COM
3775 TENTH STREET, RIVERSIDE CALIFORNIA 92501 (951) 684 4664 / 5751 PALMER WAY, SUITE C, CARLSBAD CALIFORNIA 92010 (760) 438 5899

GHS KITCHEN & WEIGHTROOM MOD
GROSSMONT HIGH SCHOOL
1100 MURRAY DR, EL CAJON, CA 92020
GROSSMONT UNION HIGH SCHOOL

UTILITY PLAN

C-2.0

1-30-55

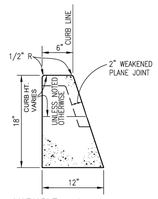

VARIABLE HEIGHT CURB

AREA=1.12 Sq. Ft.

NOTES:

1. CONCRETE SHALL BE 520-C-2500.
2. PLACE EXPANSION JOINTS AT CURB RETURNS ADJACENT TO STRUCTURES AND AT NO GREATER THAN 45' INTERVALS.
3. PLACE WEAKENED PLANE JOINTS AT 15' INTERVALS FROM POINT OF CURB RETURN.

VARIABLE HEIGHT CONCRETE CURB (1)

NOT TO SCALE

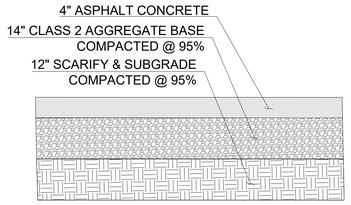

VEHICULAR ASPHALT PAVING SECTION (2)

NOT TO SCALE

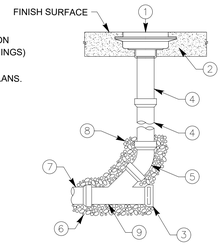

1. PROVIDE SQUARE 12" GALVANIZED CAST IRON FLOOR DRAIN, HEEL PROOF (1/2" TO 5/8" OPENINGS) AND VANDAL PROOF, (SMITH OR EQUAL).
2. CONCRETE PAVING PER ARCHITECTURAL PLANS.
3. INSTALL PLUG IF AT END OF LINE.
4. 6" PVC RISER PIPE.
5. 45° ELBOW.
6. 3/4" CRUSHED ROCK PIPE BEDDING.
7. STORM DRAIN MAIN LINES, SIZE PER PLAN
8. 3/4" CRUSHED ROCK.
9. STANDARD WYE BRANCH.

12" CAST IRON DRAIN INLET (SMITH OR EQUAL) (3)

NOT TO SCALE

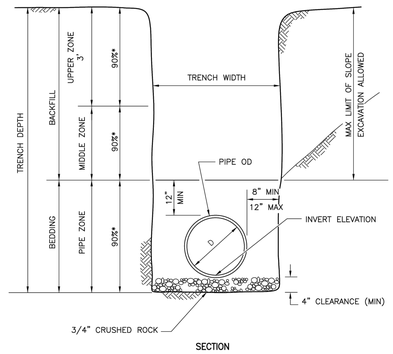

SECTION

NOTES

1. SEE G-24A AND G-24B OR G-25 FOR RESURFACING DETAILS ON IMPROVED STREETS.
2. (*) INDICATES MINIMUM RELATIVE COMPACTION.
3. TOP 12" OF TRENCH BACKFILL IN STREET SECTION SHALL BE 95% RELATIVE COMPACTION UNLESS SPECIFIED OTHERWISE.

Revision	By	Approved	Date
ORIGINAL		Kercheval	12/75
Reformatted		T. Stanton	04/06
Edited	S.S.	T. Regello	03/11
Edited	T.R.	T. Regello	10/15
Edited	M.W.	M. Widelski	10/18

SAN DIEGO REGIONAL STANDARD DRAWING

PIPE BEDDING AND TRENCH BACKFILL FOR STORM DRAINS

RECOMMENDED BY THE SAN DIEGO REGIONAL STANDARDS COMMITTEE

10/25/2018

Chairperson R.C.E. 19246 Date

DRAWING NUMBER D-60

STORM DRAIN PIPE BEDDING AND BACKFILL (4)

NOT TO SCALE

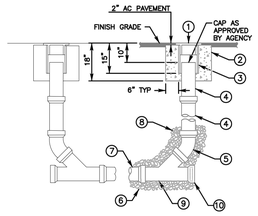

TYPE B SEWER LATERAL CLEANOUT

NOTES:
1) REFER TO AGENCY SPECIFICATIONS WHERE APPLICABLE
2) CLEANOUTS TO BE INSTALLED AT THE END OF MAINS WHERE INDICATED ON THE PLANS
3) CLEANOUT PIPE TO BE SAME SIZE AND MATERIAL AS SEWER MAIN UP TO 8"
4) BACKFILL TO TOP OF 45° BEND WITH 3/4" CRUSHED ROCK
5) MATERIALS SHALL BE SELECTED FROM THE AGENCY'S APPROVED MATERIALS LIST

LEGEND ON PLANS

ITEM NO	SIZE AND DESCRIPTION	ITEM NO	SIZE AND DESCRIPTION
1	12" CI CLEANOUT BOX COVER MARKED 'SEWER' OR 'STORM' AS REQUIRED	5	45° ELBOW
		6	3/4" CRUSHED ROCK PIPE BEDDING
2	TYPE V CONCRETE RING	7	SEWER MAIN
3	12" PVC, C-900 x 15" LONG (CLEANOUT BOX)	8	3/4" CRUSHED ROCK SEE NOTE 4
		9	STANDARD WYE BRANCH
4	SIZE x REQUIRED LENGTH PVC PIPE	10	INSTALL PLUG AND CONCRETE LUG

Revision	By	Approved	Date
ORIGINAL		Kercheval	12/75
Replaced S-03		J. Tomasulo	03/05
Delete Metric	MR	B. KNOLL	03/11
Reviewed	BK	B. KNOLL	04/15
Reviewed	BK	B. KNOLL	10/18

SAN DIEGO REGIONAL STANDARD DRAWING

SEWER OR STORM DOUBLE CLEANOUT

RECOMMENDED BY THE SAN DIEGO REGIONAL STANDARDS COMMITTEE

10/25/2018

Chairperson R.C.E. 19246 Date

DRAWING NUMBER SC-01

SEWER OR STORM DOUBLE CLEANOUT (5)

NOT TO SCALE

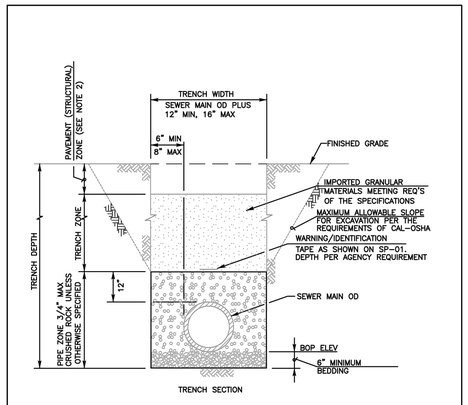

TRENCH SECTION

NOTES:
1) REFER TO AGENCY SPECIFICATIONS FOR TRENCHING, BACKFILLING AND COMPACTING WHERE APPLICABLE
2) PAVING OR PAVEMENT REPAIR TO BE DONE IN ACCORDANCE WITH AGENCY OF JURISDICTION
3) EXCAVATE BELL HOLES AT EACH JOINT TO PERMIT PROPER ASSEMBLY AND INSPECTION OF THE ENTIRE JOINT
4) FILTER FABRIC AS REQUIRED BY AGENCY OF JURISDICTION (WITH A MINIMUM 12" OVERLAP).

Revision	By	Approved	Date
ORIGINAL		Kercheval	12/75
Replaced S-04		J. Tomasulo	03/05
Delete Metric	MR	B. KNOLL	03/11
Reviewed	BK	B. KNOLL	04/15
Reviewed	BK	B. KNOLL	10/18

SAN DIEGO REGIONAL STANDARD DRAWING

PIPE BEDDING AND TRENCH BACKFILL FOR SEWER FACILITIES

RECOMMENDED BY THE SAN DIEGO REGIONAL STANDARDS COMMITTEE

10/25/2018

Chairperson R.C.E. 19246 Date

DRAWING NUMBER SP-02

SEWER PIPE BEDDING AND BACKFILL (6)

NOT TO SCALE

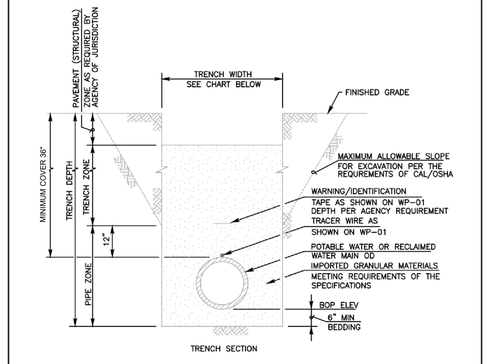

TRENCH SECTION

NOTES:
1) REFER TO AGENCY SPECIFICATIONS WHERE APPLICABLE
2) PAVING OR PAVEMENT REPAIR TO BE DONE IN ACCORDANCE TO CITY OR COUNTY STANDARDS
3) EXCAVATE BELL HOLES AT EACH PIPE JOINT TO PERMIT PROPER ASSEMBLY AND INSPECTION OF THE ENTIRE JOINT
4) ALL PIPELINE TRENCHES SHALL BE EXCAVATED SO THAT THE DISTANCE BETWEEN TRENCH WALLS AT THE TOP OF PIPE SHALL BE AS SHOWN BELOW:

TRENCH WIDTH

NOMINAL PIPE INSIDE DIAMETER	MINIMUM DISTANCE	MAXIMUM DISTANCE
4" & SMALLER	18"	28"
6" & 8"	24"	32"
10" & 12"	28"	36"
16" THRU 36"	OD PLUS 24"	OD PLUS 36"

Revision	By	Approved	Date
ORIGINAL		Kercheval	12/75
Add Metric		T. Stanton	03/03
Replaced W-2		J. Tomasulo	10/04
Delete Metric	MR	B. KNOLL	03/11
Updated	BK	B. KNOLL	10/18

SAN DIEGO REGIONAL STANDARD DRAWING

PIPE BEDDING AND TRENCH BACKFILL FOR POTABLE AND RECYCLED WATER MAINS

RECOMMENDED BY THE SAN DIEGO REGIONAL STANDARDS COMMITTEE

10/25/2018

Chairperson R.C.E. 19246 Date

DRAWING NUMBER WP-02

WATER PIPE BEDDING AND BACKFILL (7)

NOT TO SCALE

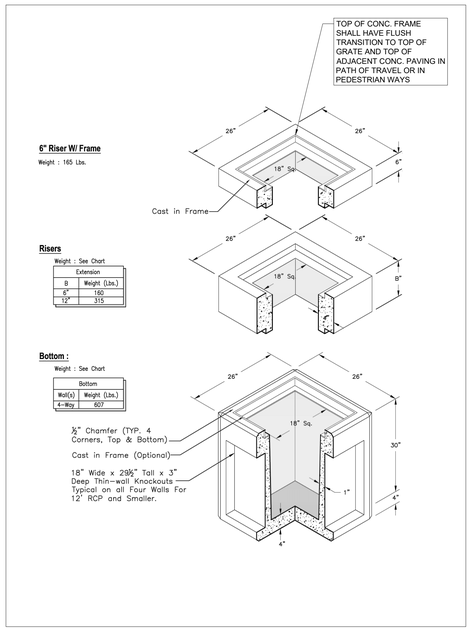

18" PRECAST STORM DRAIN CLEANOUT / INLET (8)

NOT TO SCALE

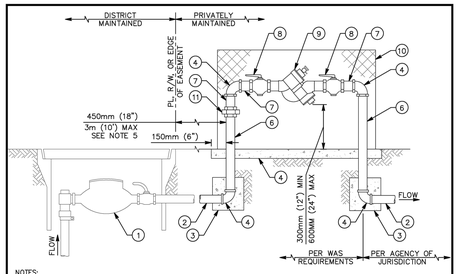

NOTES:
1) REFER TO SECTION 15112 OF THE SPECIFICATIONS
2) INSTALL WARNING/IDENTIFICATION TAPE AS SHOWN ON WP-01
3) LOCATE BACKFLOW PREVENTION DEVICE (BPD) IN SUCH A MANNER THAT WILL ALLOW THE DEVICE TO BE READILY ACCESSIBLE FOR INSPECTION & REPAIR
4) ALL ABOVE GROUND PIPING, UNIONS, ELBOWS, & NIPPLES SHALL BE SOLDERED OR THREADED BRASS
5) NO CONNECTIONS OF ANY KIND WILL BE ALLOWED IN THIS AREA, INSPECTION BY THE DISTRICT SHALL TAKE PLACE PRIOR TO BACKFILL. INSTALL A CASING ENCASED IN CONCRETE WHEN THE DISTANCE BETWEEN THE METER BOX AND THE RISER TO THE BPD EXCEEDS 450mm (18").
6) INSTALL A PRESSURE REDUCING VALVE IN LINE WHEN SYSTEM PRESSURE EXCEEDS 1.03 MPa (150 PSI) OR WHEN RECOMMENDED BY THE BACKFLOW MANUFACTURER
7) TESTING SHALL BE CONDUCTED IN ACCORDANCE WITH SECTION 15112 OF THE SPECIFICATIONS PRIOR TO ACCEPTANCE BY THE DISTRICT
8) BPD & APPURTENANCES INSTALLED FOR THE USE OF RECYCLED WATER SHALL BE IDENTIFIED AS DESCRIBED IN SECTION 15151 OF THE SPECIFICATIONS
9) MATERIALS SHALL BE SELECTED FROM THE APPROVED MATERIALS LIST

RP W
RP RW
LEGEND ON PLANS

ITEM NO	SIZE AND DESCRIPTION	ITEM NO	SIZE AND DESCRIPTION
1	METER BOX & METER ASSEMBLY SEE WS-01 & WS-02	6	BRASS OR COPPER PIPE, SEE NOTES 4 & 6
		7	75mm (3") LONG NIPPLE, SEE NOTES 4 & 6
2	SCH 80 PVC, BRASS OR COPPER PIPE	8	BALL VALVE "SHUT-OFF"
3	CONCRETE THRUST BLOCK, SEE WT-01	9	REDUCED PRESSURE BACKFLOW DEVICE
4	90° ELL, SEE NOTE 4	10	ENCLOSURE (OPTIONAL)
5	CONCRETE SLAB, MINIMUM 100mm (4") THICK x 450mm (18") WIDE	11	UNION, SEE NOTE 4 (ONLY ONE REQUIRED)

19mm THRU 50mm (3/4" THRU 2") REDUCED PRESSURE BACKFLOW PREVENTION DEVICE

WATER AGENCIES' STANDARDS

COMMITTEE APPROVAL: 11/12/2020

DRAWING NUMBER: WR-01

2" WATER BACKFLOW PREVENTER (9)

NOT TO SCALE

STAMPS

IDENTIFICATION STAMP
DIV. OF THE STATE ARCHITECT
APP: 04-120895 INC:
REVIEWED FOR
SS ☑ FLS ☑ ACS ☑
DATE: 06/27/2022

CROSS CIVIL ENGINEERING
4653 CARMEL MOUNTAIN RD. SUITE 308, SAN DIEGO, CA 92130

CONSULTANT BRANDING

RUHNAU CLARKE ARCHITECTS

GHS KITCHEN & WEIGHTROOM MOD: 06.21.22 - DSA Submittal

PROJECT No. :1-30-55
11/8/2021 2:47:06 PM

DRAWN BY: CHECKED BY:

ISSUE No.____ DATE____ DESCRIPTION____ REVISION No.____ DATE____ DESCRIPTION____

RUHNAUCLARKE.COM

3775 TENTH STREET, RIVERSIDE CALIFORNIA 92501 (951) 684 4664 / 5751 PALMER WAY, SUITE C, CARLSBAD CALIFORNIA 92010 (760) 438 5899

GHS KITCHEN & WEIGHTROOM MOD
GROSSMONT HIGH SCHOOL
1100 MURRAY DR, EL CAJON, CA 92020
GROSSMONT UNION HIGH SCHOOL

CIVIL DETAILS

C-3.0

1-30-55

Point Table			
Point #	Raw Description	Northing	Easting
1	WATER POC	1864853.7003	6334935.4032
2	SEWER CO	1865074.0617	6335250.4081
3	SEWER POC	1865057.9777	6335219.5158
4	EDGE OF CONCRETE	1864976.8081	6334992.0440
5	SD INLET	1864929.6364	6334915.9037
6	EDGE OF CONCRETE	1864985.0037	6334997.7740
7	SD INLET	1864932.1058	6334912.3697
8	SD INLET	1864988.9372	6334949.9042
9	EDGE OF CONCRETE	1864968.6126	6334986.3140
10	EDGE OF CONCRETE	1864917.8741	6334958.1605
11	EDGE OF CONCRETE	1864939.0752	6334927.8370
12	SD INLET	1864958.0617	6335070.0190
13	SD INLET	1864966.9846	6335057.1266
14	SD ANGLE	1864879.6284	6334895.5576
15	EDGE OF CONCRETE	1865092.3286	6335268.1988
16	EDGE OF CONCRETE	1864933.4731	6335036.5732
17	EDGE OF CONCRETE	1864980.0529	6334956.4872
18	EDGE OF CONCRETE	1864958.8518	6334986.8106
19	EDGE OF CONCRETE	1864911.4914	6334962.8609
20	EDGE OF CONCRETE	1864874.4999	6335016.3084
21	GATE VALVE	1864851.9490	6334936.2018
22	SD ANGLE	1864823.2727	6334982.7558
23	SEWER CO	1865001.0427	6335133.4397
24	SEWER CO	1865055.6744	6335220.9537

Point Table			
Point #	Raw Description	Northing	Easting
25	EDGE OF CONCRETE	1865083.7948	6335256.2382
26	SD INLET	1865107.6299	6335230.7010
27	GATE VALVE	1865063.4152	6335228.3004
28	EDGE OF CONCRETE	1865081.9241	6335254.7754
29	WATER POC	1865064.2883	6335229.6991
30	SD ANGLE	1864922.9611	6334925.5485
31	SD INLET	1864916.6883	6334934.6119
32	SD INLET	1864886.2631	6334885.9814
33	SD INLET	1864887.7925	6334883.8083
34	SD INLET	1864860.1147	6334869.8670
35	SD INLET	1864825.0789	6334919.5195
36	EDGE OF CONCRETE	1865129.3545	6335297.0880
37	EDGE OF CONCRETE	1865152.6031	6335267.3170
38	EDGE OF CONCRETE	1865150.1196	6335277.0682
39	EDGE OF CONCRETE	1865141.9615	6335288.1159
40	EDGE OF CONCRETE	1865140.5211	6335296.5923
41	EDGE OF CONCRETE	1865081.8611	6335265.5845
42	EDGE OF CONCRETE	1865077.0283	6335257.8429
43	EDGE OF CONCRETE	1865134.3682	6335222.1579
44	ROOF DRAIN POC	1865156.7695	6335234.6108
45	ROOF DRAIN POC	1865140.5091	6335221.8954
46	EDGE OF CONCRETE	1865149.8124	6335234.2351
47	ROOF DRAIN POC	1865138.4484	6335220.2840
48	EDGE OF CONCRETE	1865045.3374	6335191.7540

Point Table			
Point #	Raw Description	Northing	Easting
49	EDGE OF CONCRETE	1865038.9828	6335181.5746
50	EDGE OF CONCRETE	1865044.0725	6335178.3974
51	EDGE OF CONCRETE	1864940.5545	6334936.1924
52	EDGE OF CONCRETE	1864953.6674	6334945.3604
53	EDGE OF CONCRETE	1864926.2294	6334956.6812
54	EDGE OF CONCRETE	1864939.3423	6334965.8492
55	EDGE OF CONCRETE	1864958.5847	6334948.7984
56	EDGE OF CONCRETE	1864971.6975	6334957.9665
57	EDGE OF CONCRETE	1864944.2596	6334969.2873
58	EDGE OF CONCRETE	1864957.3725	6334978.4553
59	EDGE OF CONCRETE	1864940.2326	6334982.7511
60	EDGE OF CONCRETE	1864958.0597	6335053.7633
61	EDGE OF CONCRETE	1865007.9898	6334982.3493
62	EDGE OF CONCRETE	1864983.4032	6334965.1592
63	EDGE OF CONCRETE	1864993.1992	6335003.5041
64	EDGE OF CONCRETE WALL	1864982.6157	6334950.1807
65	EDGE OF CONCRETE WALL	1864977.5931	6334948.4441
66	EDGE OF ASPHALT	1864931.5577	6334916.2577
67	EDGE OF ASPHALT	1864925.2114	6334925.4650
68	EDGE OF ASPHALT	1864909.5379	6334914.5971
69	EDGE OF ASPHALT	1864919.5089	6334933.7599
70	EDGE OF ASPHALT	1864903.8000	6334922.8877
71	EDGE OF ASPHALT	1864825.3737	6334933.6470
72	EDGE OF ASPHALT	1864835.4465	6334940.6185

Point Table			
Point #	Raw Description	Northing	Easting
73	EDGE OF ASPHALT	1864832.8478	6334944.3732
74	SD INLET	1865119.6143	6335223.2350
75	EDGE OF CONCRETE	1864815.8181	6334959.5752
76	EDGE OF CONCRETE	1865050.4271	6335188.5767
77	EDGE OF CONCRETE	1865004.7582	6335093.0857
78	EDGE OF CONCRETE	1865003.2612	6335096.8567
79	EDGE OF ASPHALT	1864837.3740	6335061.1644
80	EDGE OF ASPHALT	1864815.3915	6335048.0411
81	EDGE OF ASPHALT	1864782.9720	6335023.7671
82	EDGE OF ASPHALT	1864792.5510	6334981.1962
83	EDGE OF ASPHALT	1864799.2937	6334971.5589
84	EDGE OF ASPHALT	1864866.9739	6335018.3967
85	EDGE OF ASPHALT	1864871.0853	6335021.2420
86	EDGE OF ASPHALT	1864893.6183	6335036.8359
87	EDGE OF ASPHALT	1864916.2317	6335047.5410
88	EDGE OF ASPHALT	1864912.9900	6335060.6550
89	EDGE OF ASPHALT	1864953.2519	6335074.2114
90	EDGE OF ASPHALT	1864836.6595	6335070.9826
91	EDGE OF CONCRETE	1864770.9848	6335039.7767
92	EDGE OF CONCRETE	1864803.4043	6335064.0507
93	EDGE OF CONCRETE	1864806.3896	6335060.0637
94	EDGE OF CONCRETE	1864801.6062	6335066.4522
95	EDGE OF CONCRETE	1864825.9525	6335074.7114
96	EDGE OF CONCRETE	1864820.2933	6335080.4441

Point Table			
Point #	Raw Description	Northing	Easting
97	EDGE OF CONCRETE	1864896.6291	6335031.6228
98	EDGE OF CONCRETE	1864903.7172	6335034.9783
99	SD INLET	1864825.3811	6334979.7430
100	ROOF DRAIN POC	1864867.4334	6335006.6802
101	SEWER POC	1864846.9636	6334915.5723
102	EDGE OF CONCRETE	1864822.3404	6334980.2110
103	EDGE OF CONCRETE	1864956.6039	6335069.4171
104	EDGE OF CONCRETE	1864960.3462	6335068.4246
105	EDGE OF CONCRETE	1864984.8608	6335080.0298
106	EDGE OF CONCRETE	1864986.1221	6335081.1526
107	EDGE OF CONCRETE	1864966.0973	6335055.8389
108	EDGE OF CONCRETE	1864968.0557	6335063.2231
109	EDGE OF CONCRETE	1864978.2659	6335068.0566
110	EDGE OF CONCRETE	1864988.2532	6335062.0608
111	EDGE OF CONCRETE	1864989.6059	6335033.4892
112	EDGE OF CONCRETE	1864983.2413	6335031.3182
113	EDGE OF CONCRETE	1865017.6413	6335165.3277
114	EDGE OF CONCRETE	1865016.5188	6335163.5295
115	EDGE OF CONCRETE	1865021.9354	6335160.1481
116	EDGE OF CONCRETE	1865021.5165	6335163.0375
117	EDGE OF CONCRETE	1865023.1159	6335162.0391
118	EDGE OF CONCRETE	1865025.5229	6335157.9086
119	EDGE OF CONCRETE	1865025.8983	6335157.6743
120	EDGE OF CURB RAMP	1865021.2880	6335172.7669

Point Table			
Point #	Raw Description	Northing	Easting
121	EDGE OF CURB RAMP	1865019.2110	6335169.3485
122	EDGE OF CONCRETE	1864958.3223	6335001.0320
123	EDGE OF WALL	1864970.5051	6335001.0591
124	EDGE OF WALL	1864973.3701	6334996.9613
125	EDGE OF WALL	1864965.1746	6334991.2313
126	EDGE OF WALL	1864962.3096	6334995.3291
127	EDGE OF WALL	1864955.9857	6334990.9100
128	ROOF DRAIN POC	1864836.5155	6334985.2816
129	SD INLET	1864848.1088	6334887.2037
130	SD INLET	1864825.0886	6334935.3292
131	EDGE OF CONCRETE	1864765.5906	6335046.9810
132	EDGE OF CONCRETE	1865026.7034	6335159.7995
133	EDGE OF CONCRETE	1864870.6303	6334902.5122
134	EDGE OF CONCRETE	1864850.0723	6334888.2866
135	SD ANGLE	1864873.3293	6334904.6590
136	BLDG GRIDLINE H-7	1864879.1071	6334907.4981
137	BLDG GRIDLINE A-1	1865088.5237	6335125.2914
138	BLDG GRIDLINE F-2.3	1865130.0159	6335220.1569
139	DAYLIGHT PIPE	1864980.3484	6334928.8829
140	SD ANGLE	1864972.9966	6334939.5264
141	SD INLET	1864969.8950	6334944.0062
142	SD INLET	1864942.6420	6334983.3831
143	SD INLET	1864929.5523	6335002.2959
144	SD INLET	1864912.1763	6335027.4018

Point Table			
Point #	Raw Description	Northing	Easting
145	SD INLET	1865007.9359	6335093.3737
146	SD ANGLE	1864963.2727	6335062.4898
147	SD ANGLE	1864933.4221	6335013.3964
148	SD INLET	1864969.1289	6334988.6202
149	SD INLET	1864963.0285	6334997.5723
150	SD INLET	1864985.5473	6334999.9836
151	EDGE OF CONCRETE	1864866.3024	6335010.6359
152	SEWER POC	1865090.7492	6335262.3297
153	SEWER ANGLE	1865072.0049	6335259.2991
154	EDGE OF CONRETE	1865169.2039	6335286.4908
155	EDGE OF CONCRETE	1865162.2796	6335281.0761
156	EDGE OF CONCRETE	1865167.7325	6335288.9913
157	EDGE OF CONCRETE	1865165.6625	6335285.6754
158	EDGE OF CONCRETE	1865164.5120	6335286.3937
159	EDGE OF CONCRETE	1865166.5819	6335289.7096
160	EDGE OF CONCRETE	1865161.1964	6335293.0716
161	EDGE OF CONCRETE	1865160.3359	6335292.2506
162	EDGE OF CONCRETE	1865160.7507	6335282.2721
163	EDGE OF CONCRETE	1865169.1174	6335288.1268
164	EDGE OF ASPHALT	1864949.8222	6335079.1169
165	SD ANGLE	1864833.3708	6334989.8001
166	ROOF DRAIN POC	1864874.3589	6334905.3716
167	EDGE OF ASPHALT	1864876.3681	6334894.2206
168	ROOF DRAIN POC	1864906.5225	6334927.7768
169	EDGE OF CONCRETE	1865011.4967	6335169.1636
170	ROOF DRAIN POC	1865140.7510	6335203.0547
171	ROOF DRAIN POC	1865123.8272	6335178.0982
172	ROOF DRAIN POC	1865107.3114	6335151.6026
173	ROOF DRAIN POC	1865082.5790	6335125.7610
174	SD ANGLE	1865045.7589	6335141.4411
175	SD ANGLE	1865042.5614	6335147.9659
176	SD ANGLE	1864993.7763	6335083.6015
177	EDGE OF CONCRETE	1865094.1985	6335281.6810
178	EDGE OF CONCRETE	1865089.5097	6335277.8367
179	EDGE OF CONCRETE	1865135.7419	6335301.2981
180	EDGE OF CONCRETE	1865139.9286	6335302.7315
181	EDGE OF CONCRETE	1865141.8721	6335297.0548
182	EDGE OF CONCRETE	1864941.5565	6334980.8347
183	EDGE OF CONCRETE	1864809.3864	6335056.0613
184	EDGE OF CONCRETE	1864829.4980	6335071.1199
185	EDGE OF CONCRETE	1864832.7957	6335067.7795
186	EDGE OF CONCRETE	1864836.9518	6335061.7745
187	EDGE OF CONCRETE	1864814.9751	6335048.5972
188	EDGE OF CONCRETE	1864782.5581	6335024.3199
189	EDGE OF CONCRETE	1864812.7290	6334973.4422
190	EDGE OF ASPHALT	1864822.0529	6334928.7788
191	EDGE OF ASPHALT	1864823.6660	6334936.1143
192	EDGE OF ASPHALT	1864829.5693	6334940.3816
193	EDGE OF ASPHALT	1864828.7443	6334941.5332
194	SEWER CO	1865094.5511	6335293.4653
195	SD ANGLE	1865148.7255	6335221.6276
196	SD INLET	1865146.2256	6335223.1860
197	SD ANGLE	1865108.2613	6335151.0096
198	SD ANGLE	1865092.3433	6335125.5108
199	SD ANGLE	1865143.8987	6335208.0970
200	SD ANGLE	1865014.6351	6335125.2913
201	SEWER ANGLE	1865084.8675	6335252.9078
202	SD INLET	1865009.7021	6335134.4422
203	EDGE OF ASPHALT	1864883.1963	6334884.3527
204	SD ANGLE	1864912.8892	6334918.5777
205	SD INLET	1864828.8699	6335069.3197
206	SD ANGLE	1864802.7429	6335062.3386
207	SD INLET	1864803.3799	6335065.8396
208	EDGE OF CURB RAMP	1865018.5051	6335180.6920
209	SD ANGLE	1865134.5027	6335213.9541
210	SD ANGLE	1865141.2490	6335209.7487
211	SD ANGLE	1865124.7946	6335177.4943

Point Table			
Point #	Raw Description	Northing	Easting
212	EDGE OF CONCRETE	1864806.8553	6334969.2236
213	SEWER ANGLE	1864842.9532	6334921.3667
214	WATER ANGLE	1864845.9470	6334937.8199
215	EDGE OF CONCRETE	1864935.6372	6334932.7544
216	EDGE OF CONCRETE	1864982.5039	6335018.8013
217	EDGE OF CONCRETE	1864966.1128	6335007.3412
218	EDGE OF CONCRETE	1864974.3084	6335013.0713
219	EDGE OF CONCRETE	1864855.8100	6334879.9949
220	EDGE OF ASPHALT	1864862.6383	6334870.1270
221	EDGE OF CONCRETE	1864938.2309	6335082.1240
222	EDGE OF CONCRETE	1864915.3286	6335069.5057
223	WATER BFP	1865004.9732	6335156.4966
224	WATER BFP	1865004.3281	6335155.4342
225	EDGE OF CONCRETE	1864943.9925	6334931.2751
226	EDGE OF CONCRETE	1864957.1054	6334940.4431
227	EDGE OF CONCRETE	1864962.0227	6334943.8811
228	EDGE OF CONCRETE	1864975.1356	6334953.0491
229	EDGE OF CONCRETE	1864976.6149	6334961.4045
230	EDGE OF CONCRETE	1864953.9345	6334983.3726
231	EDGE OF CONCRETE	1864962.2898	6334981.8933
232	EDGE OF CONCRETE	1864935.9043	6334970.7666
233	EDGE OF CONCRETE	1864940.8216	6334974.2046
234	EDGE OF CONCRETE	1864922.7914	6334961.5985
235	EDGE OF CONCRETE	1864921.3121	6334953.2432
236	EDGE OF CONCRETE	1864982.0215	6334953.6682
237	EDGE OF CONCRETE	1864969.8920	6335072.9436
238	EDGE OF CONCRETE	1864971.1756	6335070.2320
239	EDGE OF CONCRETE	1864976.5987	6335072.7993
240	EDGE OF CONCRETE	1864975.3150	6335075.5108
241	EDGE OF CONCRETE	1865014.6735	6335139.6934
242	EDGE OF CONCRETE	1865017.2184	6335138.1048
243	EDGE OF CONCRETE	1865020.3956	6335143.1944
244	EDGE OF CONCRETE	1865017.8508	6335144.7831
245	SD ANGLE	1865065.6232	6335256.8908
246	SD ANGLE	1865084.8617	6335286.0444
247	SD INLET	1865096.0766	6335285.9385
248	SD INLET	1865101.9404	6335285.8159
249	SD INLET	1865125.9878	6335300.9537
250	SD INLET	1865135.0217	6335300.4129
251	SD INLET	1865139.1149	6335293.7192
252	EDGE OF CONCRETE	1865087.4154	6335274.4818
253	EDGE OF CONCRETE	1865098.7954	6335285.5426
254	EDGE OF CONCRETE	1865122.6063	6335301.0975
255	EDGE OF CONCRETE	1865079.0091	6335256.5951
256	EDGE OF CONCRETE	1865081.8057	6335258.7820
257	EDGE OF CONCRETE	1865074.0546	6335243.6374
258	EDGE OF CONCRETE	1865077.6421	6335241.3978
259	EDGE OF CONCRETE	1865075.2351	6335245.5283
260	EDGE OF CONCRETE	1865078.8226	6335243.2888
261	EDGE OF CONCRETE	1864827.7832	6334972.3465
262	SD ANGLE	1864859.6096	6335008.1038
263	EDGE OF CONCRETE	1865004.7011	6335154.1288
264	EDGE OF CONCRETE	1865006.2623	6335156.6906
265	SD INLET	1864942.9997	6334931.4232
266	SD INLET	1864961.0953	6334944.0845
267	SD INLET	1864979.0767	6334956.6753
268	SD INLET	1864925.0810	6334956.8381
269	SD INLET	1864943.1766	6334969.4994
270	SD INLET	1864961.1581	6334982.0903
271	DAYLIGHT PIPE	1864771.8882	6335038.5702
272	EDGE OF CONCRETE	1865087.1257	6335258.8371
273	EDGE OF CONCRETE	1865082.0118	6335260.1492
274	SD ANGLE	1865068.2856	6335255.2312
275	SD ANGLE	1865035.1761	6335202.1166
276	SD INLET	1865038.0918	6335189.1345
277	SD INLET	1864813.7216	6334962.2361

GRAPHIC SCALE
20 0 20 40
(IN FEET)
1 INCH = 20 FT

GHS KITCHEN & WEIGHTROOM MOD: 06.21.22 - DSA Submittal

PROJECT No. :1-30-55
11/8/2021 2:47:06 PM

DRAWN BY: CHECKED BY:

ISSUE No.	DATE	DESCRIPTION	REVISION No.	DATE	DESCRIPTION
ISSUE No.	DATE	DESCRIPTION	REVISION No.	DATE	DESCRIPTION
ISSUE No.	DATE	DESCRIPTION	REVISION No.	DATE	DESCRIPTION
ISSUE No.	DATE	DESCRIPTION	REVISION No.	DATE	DESCRIPTION

RUHNAUCLARKE.COM
3775 TENTH STREET, RIVERSIDE CALFORNIA 92501 (951) 684 4664 / 5751 PALMER WAY, SUITE C, CARLSBAD CALIFORNIA 92010 (760) 438 5899

GHS KITCHEN & WEIGHTROOM MOD
GROSSMONT HIGH SCHOOL
1100 MURRAY DR, EL CAJON, CA 92020
GROSSMONT UNION HIGH SCHOOL

HORIZONTAL CONTROL PLAN

C-4.0

1-30-55

STAMPS

IDENTIFICATION STAMP
DIV. OF THE STATE ARCHITECT
APP: 04-120895 INC:
REVIEWED FOR
SS ☑ FLS ☑ ACS ☑
DATE: 06/27/2022

CONSULTANT BRANDING

CROSS CIVIL ENGINEERING
4653 CARMEL MOUNTAIN RD, SUITE 308, SAN DIEGO, CA 92130

RUHNAU CLARKE ARCHITECTS

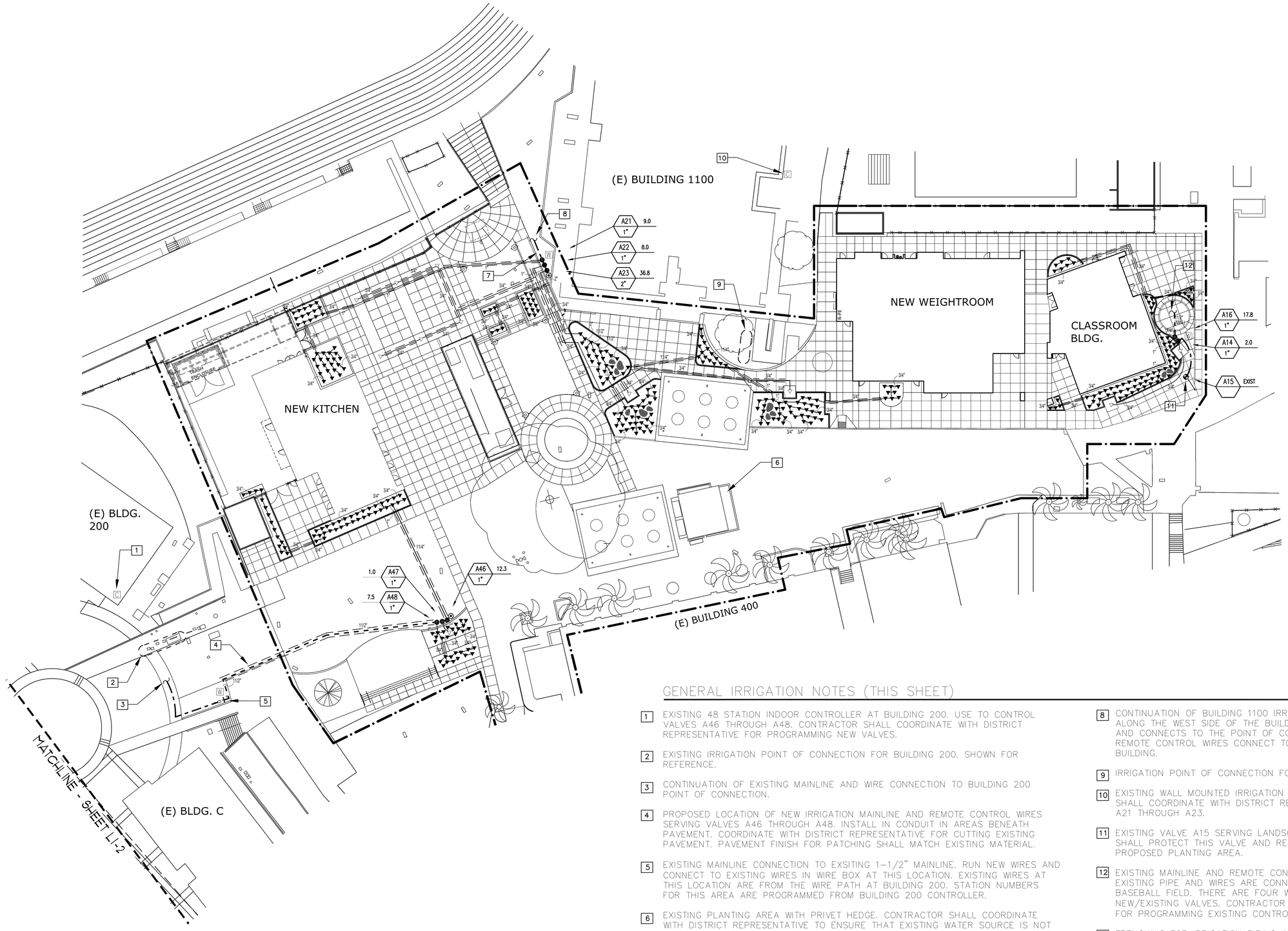

STAMPS

IDENTIFICATION STAMP
DIV. OF THE STATE ARCHITECT
APP: 04-120895 INC:
REVIEWED FOR
SS ☑ FLS ☑ ACS ☑
DATE: 06/27/2022

MM+LA ASSOCIATES
1982 White Birch Drive, Vista, CA 92081
Tel. 760-525-2343

CONSULTANT BRANDING

RUHNAU CLARKE ARCHITECTS

SEE SHEETS LI-2 AND LI-3 FOR IRRIGATION LEGEND AND DETAILS.

GENERAL IRRIGATION NOTES (THIS SHEET)

1. EXISTING 48 STATION INDOOR CONTROLLER AT BUILDING 200. USE TO CONTROL VALVES A46 THROUGH A48. CONTRACTOR SHALL COORDINATE WITH DISTRICT REPRESENTATIVE FOR PROGRAMMING NEW VALVES.
2. EXISTING IRRIGATION POINT OF CONNECTION FOR BUILDING 200. SHOWN FOR REFERENCE.
3. CONTINUATION OF EXISTING MAINLINE AND WIRE CONNECTION TO BUILDING 200 POINT OF CONNECTION.
4. PROPOSED LOCATION OF NEW IRRIGATION MAINLINE AND REMOTE CONTROL WIRES SERVING VALVES A46 THROUGH A48. INSTALL IN CONDUIT IN AREAS BENEATH PAVEMENT. COORDINATE WITH DISTRICT REPRESENTATIVE FOR CUTTING EXISTING PAVEMENT. PAVEMENT FINISH FOR PATCHING SHALL MATCH EXISTING MATERIAL.
5. EXISTING MAINLINE CONNECTION TO EXSITING 1-1/2" MAINLINE. RUN NEW WIRES AND CONNECT TO EXISTING WIRES IN WIRE BOX AT THIS LOCATION. EXISTING WIRES AT THIS LOCATION ARE FROM THE WIRE PATH AT BUILDING 200. STATION NUMBERS FOR THIS AREA ARE PROGRAMMED FROM BUILDING 200 CONTROLLER.
6. EXISTING PLANTING AREA WITH PRIVET HEDGE. CONTRACTOR SHALL COORDINATE WITH DISTRICT REPRESENTATIVE TO ENSURE THAT EXISTING WATER SOURCE IS NOT DISTURBED. EXISTING SOURCE IS UNKNOWN.
7. EXISTING WIRE AND MAINLINE SERVING VALVES A21 THROUGH A23 IN PLAZA AREAS. THERE ARE 11 SPARE WIRES AT THIS LOCATION. CONNECT EXISTING WIRING TO NEW VALVES AND SET SPARE WIRE BOX FOR REMAINING WIRES.
8. CONTINUATION OF BUILDING 1100 IRRIGATION MAINLINE AND WIRES. MAINLINE RUNS ALONG THE WEST SIDE OF THE BUILDING, ALONG THE NORTH SIDE OF THE BUILDING AND CONNECTS TO THE POINT OF CONNECTION ON THE SOUTH SIDE OF THE BUILDING. REMOTE CONTROL WIRES CONNECT TO THE CONTROLLER ON THE EAST SIDE OF THE BUILDING.
9. IRRIGATION POINT OF CONNECTION FOR BUILDING 1100. SHOWN FOR REFERENCE.
10. EXISTING WALL MOUNTED IRRIGATION CONTROLLER SERVING BUILDING 1100. CONTRACTOR SHALL COORDINATE WITH DISTRICT REPRESENTATIVE FOR PROGRAMMING OF NEW VALVES A21 THROUGH A23.
11. EXISTING VALVE A15 SERVING LANDSCAPE AREA TO THE SOUTHEAST. CONTRACTOR SHALL PROTECT THIS VALVE AND RELOCATE, AS REQUIRED, SO THAT IT FITS IN THE PROPOSED PLANTING AREA.
12. EXISTING MAINLINE AND REMOTE CONTROL WIRES SERVING VALVES A14 THROUGH A16. EXISTING PIPE AND WIRES ARE CONNECTED TO THE NORTHERN CONTROLLER NEAR THE BASEBALL FIELD. THERE ARE FOUR WIRES AVAILABLE FOR CONNECTION TO THESE NEW/EXISTING VALVES. CONTRACTOR SHALL COORDINATE WITH DISTRICT REPRESENTATIVE FOR PROGRAMMING EXISTING CONTROLLER TO RECEIVE THESE NEW VALVES.
13. TRENCHING FOR IRRIGATION PIPING IN THE EXISTING FIRE LANE SHALL SHALL BE REPAIRED/REPLACED SO THAT THE PAVING SECTION MATCHES THE EXISTING PAVING.

0 10 20 40 80
SCALE 1"=20'-0"

NORTH

IRRIGATION PLAN | SCALE: 1" = 20'-0" | REF.: | 1

PROJECT No.: 1-30-55
11/24/2021 10:24:25 AM

DRAWN BY: CHECKED BY:
ISSUE No.____ DATE____ DESCRIPTION____ REVISION No.____ DATE____ DESCRIPTION____
ISSUE No.____ DATE____ DESCRIPTION____ REVISION No.____ DATE____ DESCRIPTION____
ISSUE No.____ DATE____ DESCRIPTION____ REVISION No.____ DATE____ DESCRIPTION____
ISSUE No.____ DATE____ DESCRIPTION____ REVISION No.____ DATE____ DESCRIPTION____

RUHNAUCLARKE.COM
3775 TENTH STREET, RIVERSIDE CALIFORNIA 92501 (951) 684 4664 / 5751 PALMER WAY, SUITE C, CARLSBAD CALIFORNIA 92008 (760) 438 5899

GHS KITCHEN & WEIGHTROOM MOD
GROSSMONT HIGH SCHOOL
1100 MURRAY DR, EL CAJON, CA 92020
GROSSMONT UNION HIGH SCHOOL

IRRIGATION PLAN | **LI-1**

1-30-55

GHS KITCHEN & WEIGHTROOM MOD:

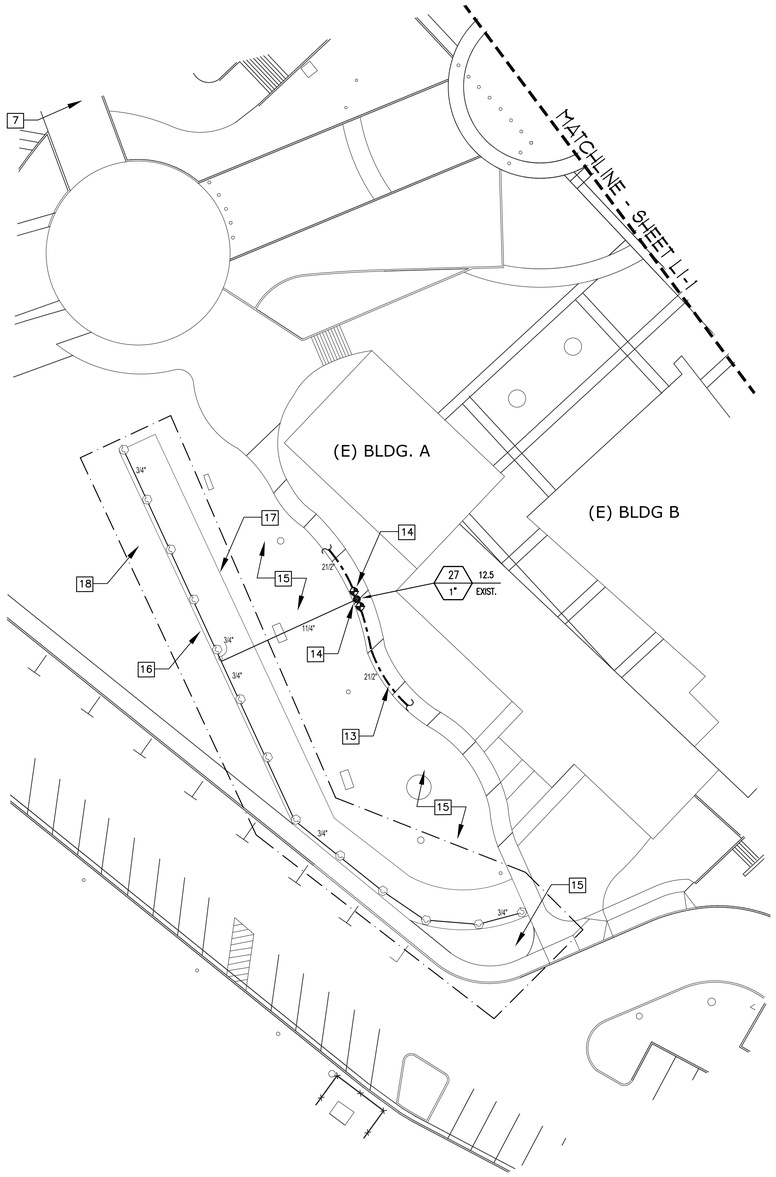

GENERAL IRRIGATION NOTES (THIS SHEET)

13 EXISTING 2-1/2" IRRIGATION MAINLINE SERVING ADJACENT EVENT CENTER PLANTING AS SHOWN ON SHEET L-1 BY SPROTTE WATSON ARCHITECTURE DATED 9-25-2018.

14 EXISTING REMOTE CONTROL VALVES SHOWN ON SHEET L-1 REFERENCED ABOVE. USE EXISTING VALVE 27 AND CONNECT TO NEW ROTOR HEADS.

15 EXISTING IRRIGATED TURF AREA HEADS TO BE ADJUSTED TO FIT NEW TURF SLOPE AREAS. PROVIDE OVERLAP WITH NEW IRRIGATION SYSTEM.

16 TOE OF SLOPE FOR NEW SLOPED TURF AREA.

17 TOP OF SLOPE FOR NEW SLOPED TURF AREA;

18 EXISTING IRRIGATION SYSTEM HEADS AT EDGE OF EXISTING WALL WILL BE DEMOLISHED. REPLACE ANY DAMAGED HEADS AND RE-INSTALL, AS REQUIRED. HEADS SHALL BE HALF HEADS WITH ARCS FACING AGAINST SLOPE. COORDINATE ALL RENOVATED IRRIGATION SYSTEMS WITH DISTRICT REPRESENTATIVE.

0 10 20 40 80

SCALE 1"=20'-0"

NORTH

GENERAL IRRIGATION NOTES

1. ALL LOCAL MUNICIPAL AND STATE LAWS, RULES AND REGULATIONS GOVERNING OR RELATING TO ANY PORTION OF THIS WORK ARE HEREBY INCORPORATED INTO AND MADE A PART OF THIS WORK AND THEIR PROVISIONS SHALL BE CARRIED OUT BY THE CONTRACTOR.
2. THE CONTRACTOR SHALL VERIFY THE LOCATIONS OF ALL EXISTING UTILITIES, STRUCTURES AND SERVICES BEFORE COMMENCING WORK. THE LOCATIONS OF UTILITIES, STRUCTURES AND SERVICES SHOWN IN THESE PLANS ARE APPROXIMATE ONLY. ANY DISCREPANCIES BETWEEN THESE PLANS AND ACTUAL FIELD CONDITIONS SHALL BE REPORTED TO THE OWNER'S REPRESENTATIVE.
3. THE CONTRACTOR SHALL OBTAIN THE PERTINENT ENGINEERING OR ARCHITECTURAL PLANS BEFORE BEGINNING WORK.
4. THE CONTRACTOR SHALL OBTAIN ALL NECESSARY PERMITS REQUIRED TO PERFORM THE WORK INDICATED HEREIN BEFORE BEGINNING WORK.
5. THIS DESIGN IS DIAGRAMMATIC. ALL EQUIPMENT SHOWN IN PAVED AREAS IS FOR DESIGN CLARITY ONLY AND IS TO BE INSTALLED WITHIN PLANTING AREAS.
6. THE CONTRACTOR SHALL NOT WILLFULLY INSTALL ANY EQUIPMENT AS SHOWN ON THE PLANS WHEN IT IS OBVIOUS IN THE FIELD THAT UNKNOWN CONDITIONS EXIST THAT WERE NOT EVIDENT AT THE TIME THESE PLANS WERE PREPARED. ANY SUCH CONDITIONS SHALL BE BROUGHT TO THE ATTENTION OF THE OWNER'S REPRESENTATIVE PRIOR TO ANY WORK OR THE IRRIGATION CONTRACTOR SHALL ASSUME ALL RESPONSIBILITY FOR ANY FIELD CHANGES DEEMED NECESSARY BY THE OWNER.
7. INSTALL ALL EQUIPMENT AS SHOWN IN THE DETAILS AND SPECIFICATIONS. CONTRACTOR SHALL BE RESPONSIBLE TO COMPLY WITH LOCAL CITY, COUNTY AND STATE REQUIREMENTS FOR BOTH EQUIPMENT AND INSTALLATION.
8. CONTRACTOR IS TO PROVIDE AN ADDITIONAL COMMON WIRE FROM CONTROLLER ALONG ENTIRETY OF MAIN LINE TO THE LAST RCV ON EACH AND EVERY LEG OF MAIN LINE. LABEL SPARE WIRES AT BOTH ENDS.
9. ALL PIPE UNDER PAVED AREAS TO BE INSTALLED IN SLEEVING TWICE THE DIAMETER OF THE PIPE CARRIED. SEE LEGEND FOR TYPE. ALL WIRE UNDER PAVED AREAS TO BE INSTALLED IN A SCH. 40 SLEEVE THE SIZE REQUIRED TO EASILY PULL WIRE THROUGH. ALL SLEEVES TO BE INSTALLED WITH A MINIMUM DEPTH AS SHOWN ON THE SLEEVING DETAILS. SLEEVES TO EXTEND AT LEAST 12" PAST THE EDGE OF THE PAVING.
10. ALL QUICK COUPLER AND REMOTE CONTROL VALVES TO BE INSTALLED IN DECOMPOSED GRANITE AREAS. INSTALL ALL QUICK COUPLER AND REMOTE CONTROL VALVES WITHIN 18" OF HARDSCAPE.
11. THE CONTRACTOR SHALL ADJUST ALL SPRINKLERS, AS REQUIRED TO ACCOMMODATE ANY VERTICAL OBSTRUCTIONS THAT MAY OCCUR, INCLUDING BUT NOT LIMITED TO LIGHT POLES, FIRE HYDRANTS, ETC. VERIFY ALL HEAD LAYOUT WITH OWNER'S AUTHORIZED REPRESENTATIVE PRIOR TO STARTING WORK.
12. ONCE THE SYSTEM IS INSTALLED, THE CONTRACTOR SHALL COORDINATE WIHT THE DISTRICT REPRESENTATIVE TO REPROGRAM THE NEW CONTROLLER TO INCORPORATE THE EXISTING VALVES.

SYMBOL Q H F	MANUFACT.	MODEL NO. / DESCRIPTION	GPM	PSI	RADIUS	DETAIL
	HUNTER	I-20-06-PRB-ADJ-SHORT RADIUS-POP-UP TURF ROTOR HEAD W/ Q,H BLACK NOZZLES	.5, 1.0	40	17 FT	C/LI-3
▼	RAINBIRD	RWS-S-B-C-1401 SERIES SHRUB BUBBLER W/ RWS SOCK	.25	30	N/A	F/LI-3
▽	RAINBIRD	RWS-B-C-1402 SERIES BUBBLER W/ RWS SOCK EACH SYMBOL REPRESENTS TWO BUBBLERS PER TREE	.50 (1.0)	30	N/A	F/LI-3
◉	RAINBIRD	44-LRC QUICK COUPLER VALVE W/ QUICK COUPLER KEY, INSTALL WITHIN 10" ROUND GREEN VALVE BOX				D/LI-3
●	RAINBIRD	MODEL EFB-CP-PRS-D (1"-1-1/2") SERIES REMOTE CONTROL VALVE, SIZE AS SHOWN				E/LI-3
	EXISTING	REMOTE CONTROL VALVES AT PHASE THREE BUILDING				N/A
C	EXISTING	AUTOMATIC IRRIGATION CONTROLLERS - PROGRAM WITH DISTRICT REPRESENTATIVE				N/A
———	AS APPROVED	PVC PIPE 3/4" - 1-1/2" SCH. 40 AS LATERAL LINES 12" BELOW GRADE				A/LI-3
- - - - -	AS APPROVED	PVC PIPE - 2" CL. 315 - PIPE SHALL BE SOLVENT WELD AS MAINLINES 18" BELOW GRADE				A/LI-3
- · - · -	EXISTING	PVC MAINLNE PIPE WITH REMOTE CONTROL WIRES ALONGSIDE				N/A
= = = = =	AS APPROVED	PVC PIPE SCH. 40 AS SLEEVING, TWICE THE DIAMETER OF PIPE OR WIRE BUNDLE CARRIED. PLACE BELOW ALL PAVING, HARDSCAPE ETC. AND AS DIRECTED BY THE DISTRICT'S AUTHORIZED REPRESENTATIVE.				B/LI-3
NO SYMBOL	AS APPROVED	IRRIGATION CONTROL WIRE #14UF AWG DIRECT BURIAL (U.L. APPROVED) ALL CONTROLLER WIRING SHALL BE COLOR-CODED AND LABELED AT EACH CONTROLLER AND ALL JUNCTION AND VALVE BOXES, TO CORRESPOND WITH PROPER CONTROLLER AND STATION. CONTRACTOR SHALL RUN TWO SPARE CONTROL WIRES TO LAST VALVE BOX AT ALL MAINLINE ENDS. MINIMUM COVER OF 18" OR SAME DEPTH AS MAIN LINE.				N/A
NO SYMBOL	3M	DBY-6 DIRECT BURIAL WATER-PROOF WIRE CONNECTORS FOR USE ON ALL WIRE CONNECTIONS (U.L. APPROVED)				E/LI-3
NO SYMBOL	CARSON	ALL VALVE BOXES SHALL BE GREEN PLASTIC WITH STAINLESS STEEL BOLTS, NUTS AND WASHERS AND CHRISTY'S VALVE IDENTIFICATION TAGS. USE CARSON MODELS 910-4B AND 1419-12-2B, HINGED				D,E/LI-3
NO SYMBOL	AS APPROVED	ALL SLIP PVC FITTINGS SHALL BE SCHEDULE 40 PVC TYPE - FOR MAINLINE USE SCHEDULE 80 PVC				N/A
NO SYMBOL	AS APPROVED	ALL THREADED PVC FITTINGS AND NIPPLES FOR MAINLINE SHALL BE SCHEDULE 80 PVC TYPE.				N/A

A10 / 2" — 34.5
- CONTROLLER/ VALVE NUMBER
- G.P.M.
- VALVE SIZE

STAMPS

IDENTIFICATION STAMP
DIV. OF THE STATE ARCHITECT
APP: 04-120895 INC:
REVIEWED FOR
SS ☑ FLS ☑ ACS ☑
DATE: 06/27/2022

CONSULTANT BRANDING

MM+LA ASSOCIATES
1982 White Birch Drive, Vista, CA 92081
Tel. 760-525-2343

RUHNAU CLARKE ARCHITECTS

SEE SHEET LI-3 FOR IRRIGATION CALCULATIONS AND DETAILS.

IRRIGATION PLAN | SCALE: 1" = 20'-0" | REF.: | 2

PROJECT No.: 1-30-55
11/24/2021 10:24:25 AM

DRAWN BY: CHECKED BY:
ISSUE No.____ DATE____ DESCRIPTION____ REVISION No.____ DATE____ DESCRIPTION____
ISSUE No.____ DATE____ DESCRIPTION____ REVISION No.____ DATE____ DESCRIPTION____
ISSUE No.____ DATE____ DESCRIPTION____ REVISION No.____ DATE____ DESCRIPTION____
ISSUE No.____ DATE____ DESCRIPTION____ REVISION No.____ DATE____ DESCRIPTION____

RUHNAUCLARKE.COM
3775 TENTH STREET, RIVERSIDE CALIFORNIA 92501 (951) 684 4664 / 5751 PALMER WAY, SUITE C, CARLSBAD CALIFORNIA 92008 (760) 438 5899

GHS KITCHEN & WEIGHTROOM MOD
GROSSMONT HIGH SCHOOL
1100 MURRAY DR, EL CAJON, CA 92020
GROSSMONT UNION HIGH SCHOOL

IRRIGATION PLAN/LEGEND

LI-2

1-30-55

GHS KITCHEN & WEIGHTROOM MOD:

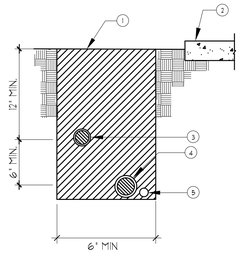

1. SATURATE AND COMPACT BACKFILL TO 90%.
2. FINISH SURFACE.
3. NON-PRESSURE LATERAL LINE.
4. PRESSURE MAIN LINE.
5. DIRECT BURIAL, LOW VOLTAGE CONTROL WIRES, BUNDLE AT 10 FT. O.C. HARD WIRE AT CONTROLLER.

NOTE: 1. SEE SLEEVING DETAIL FOR TRENCHING IN PAVED AREAS.
2. INSTALL TRACER WIRE PARALLEL WITH MAIN LINE WHERE CONTROL WIRES DO NOT OCCUR.

A TRENCHING DETAIL
NO SCALE

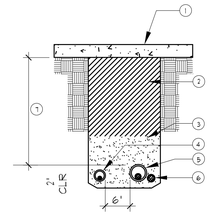

ALL SLEEVES TO BE PVC. SCH. 40 AND TWICE THE DIA. OF THE WORKING PIPE.
ALL SLEEVES TO RUN A MIN. OF 12" BEYOND HARDSCAPE EDGES.
CLEAN BACKFILL SHALL BE CLASS A CLEAN FILL SAND.

1. HARDSCAPE SURFACE.
2. CLEAN BACKFILL AS REQ. TO BE SET IN 6" LIFTS.
3. CLEAN SAND.
4. LATERAL LINE W/ SLEEVE.
5. PRESSURE MAIN LINE W/ SLEEVE.
6. CONTROL WIRES & RELAY WIRE SLEEVE. INSTALL TRACER WIRE PARALLEL WITH MAIN LINE WHERE CONTROL WIRES DO NOT OCCUR.
7. MIN. DEPTH: 24" UNDER WALKS, 30" UNDER DRIVEWAYS.

B SLEEVING DETAIL
NO SCALE

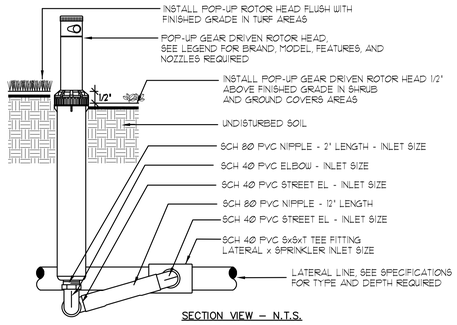

SECTION VIEW – N.T.S.

NOTE:
INSTALL ROTOR HEADS 12" FROM THE FACE OF BUILDING WALLS OR WINDOWS.
INSTALL ROTOR HEADS PLUMB. ADJUST NOZZLE STREAM TO COVER LANDSCAPE AREA WITHOUT OVERSPRAY ONTO PAVING, FENCES, WALLS OR BUILDINGS.

C POP-UP ROTOR SPRINKLER HEAD
NO SCALE

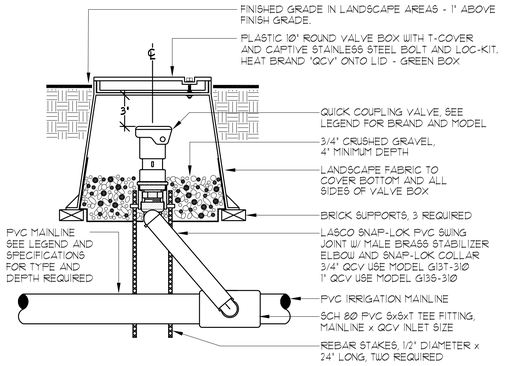

SECTION VIEW – N.T.S.

NOTE:
USE AN APPROVED, NON-HARDENING, TEFLON ASSEMBLY PASTE ON ALL THREADED FITTINGS.

D QUICK COUPLER VALVE DETAIL
NO SCALE

LANDSCAPE IRRIGATION WATER BUDGET (FOR NEW LANDSCAPE AREAS ONLY)
(based on MWELO)

PROJECT: Grossmont HS New Kitchen / Weight Room
Grossmont Union High School District
El Cajon, California

Project ETo: 55.60

MAXIMUM APPLIED WATER ALLOWANCE:
(GALLONS PER YEAR)

MAWA=(ETo)x(.62)x[(.65)(LA)+(.35)(SLA)]

51.10 x 0.62 x 6,344 + 1,614 = **252,110** Gal/yr.
Hundred Cu. Ft. / Yr. (divide by748) = **337** CCF/yr.

ESTIMATED APPLIED WATER USED:
(GALLONS PER YEAR)

ETWU=(ETo) x (.62) x [(Plant Factor)x(Hydrozone Sq. Ft.)] + SLA]
Irrigation Efficiency

HYDROZONE # 1: (Shrubs - Bubblers)
51.50 x 0.62 x 0.5 x 5,150 / 0.9 + 0 = 91,355 Gal/yr.

HYDROZONE # 2: (Turf- Rotors)
51.50 x 0.62 x 0.7 x 4,610 / 0.8 + 0 = 128,798 Gal/yr.

MAXIMUM APPLIED WATER ALLOWANCE: 252,110 Gal/yr.

TOTAL ESTIMATED WATER USE: 220,153 Gal/yr.
294 CCF/yr.

Water Conservation Note: This is an existing school expansion project. A new Kitchen, Weight Room and Museum are proposed. Irrigation will be provided using drip bubblers at each plant. Groundcover material consists of both mulch and D.G. is proposed. No living groundcover is proposed. Water conservation strategies are being implemented within the project. Existing controllers with flow and weather monitoring capabilities will be used.

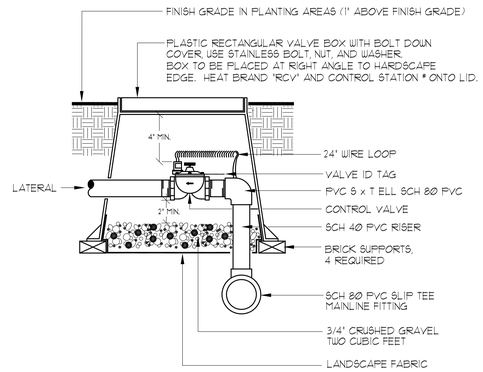

SECTION VIEW - N.T.S.

E REMOTE CONTROL VALVE
NO SCALE

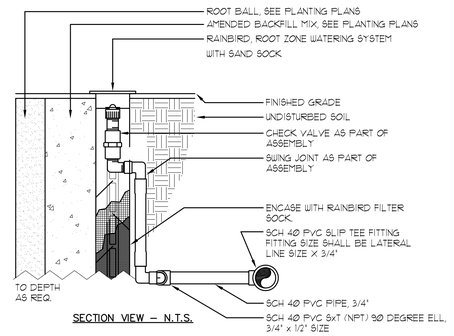

SECTION VIEW – N.T.S.

NOTE:
INSTALL BUBBLER SO THAT WATER IS APPLIED TO ROOT BALL AND SURROUNDING SOIL.
USE TEFLON TAPE ON ALL THREADED CONNECTIONS.

F SUB-SURFACE BUBBLER - TREES & SHRUBS
NO SCALE

STAMPS

IDENTIFICATION STAMP
DIV. OF THE STATE ARCHITECT
APP: 04-120895 INC:
REVIEWED FOR
SS ☑ FLS ☑ ACS ☑
DATE: 06/27/2022

CONSULTANT BRANDING

MM+LA ASSOCIATES
1982 White Birch Drive, Vista, CA 92081
Tel. 760-525-2343

RUHNAU CLARKE ARCHITECTS

GHS KITCHEN & WEIGHTROOM MOD:

PROJECT No.: 1-30-55
11/24/2021 10:24:25 AM

DRAWN BY: CHECKED BY:
ISSUE No.____ DATE____ DESCRIPTION____ REVISION No.____ DATE____ DESCRIPTION____
ISSUE No.____ DATE____ DESCRIPTION____ REVISION No.____ DATE____ DESCRIPTION____
ISSUE No.____ DATE____ DESCRIPTION____ REVISION No.____ DATE____ DESCRIPTION____
ISSUE No.____ DATE____ DESCRIPTION____ REVISION No.____ DATE____ DESCRIPTION____

RUHNAUCLARKE.COM
3775 TENTH STREET, RIVERSIDE CALIFORNIA 92501 (951) 684 4664 / 5751 PALMER WAY, SUITE C, CARLSBAD CALIFORNIA 92008 (760) 438 5899

GHS KITCHEN & WEIGHTROOM MOD
GROSSMONT HIGH SCHOOL
1100 MURRAY DR, EL CAJON, CA 92020
GROSSMONT UNION HIGH SCHOOL

IRRIGATION DETAILS

LI-3

1-30-55

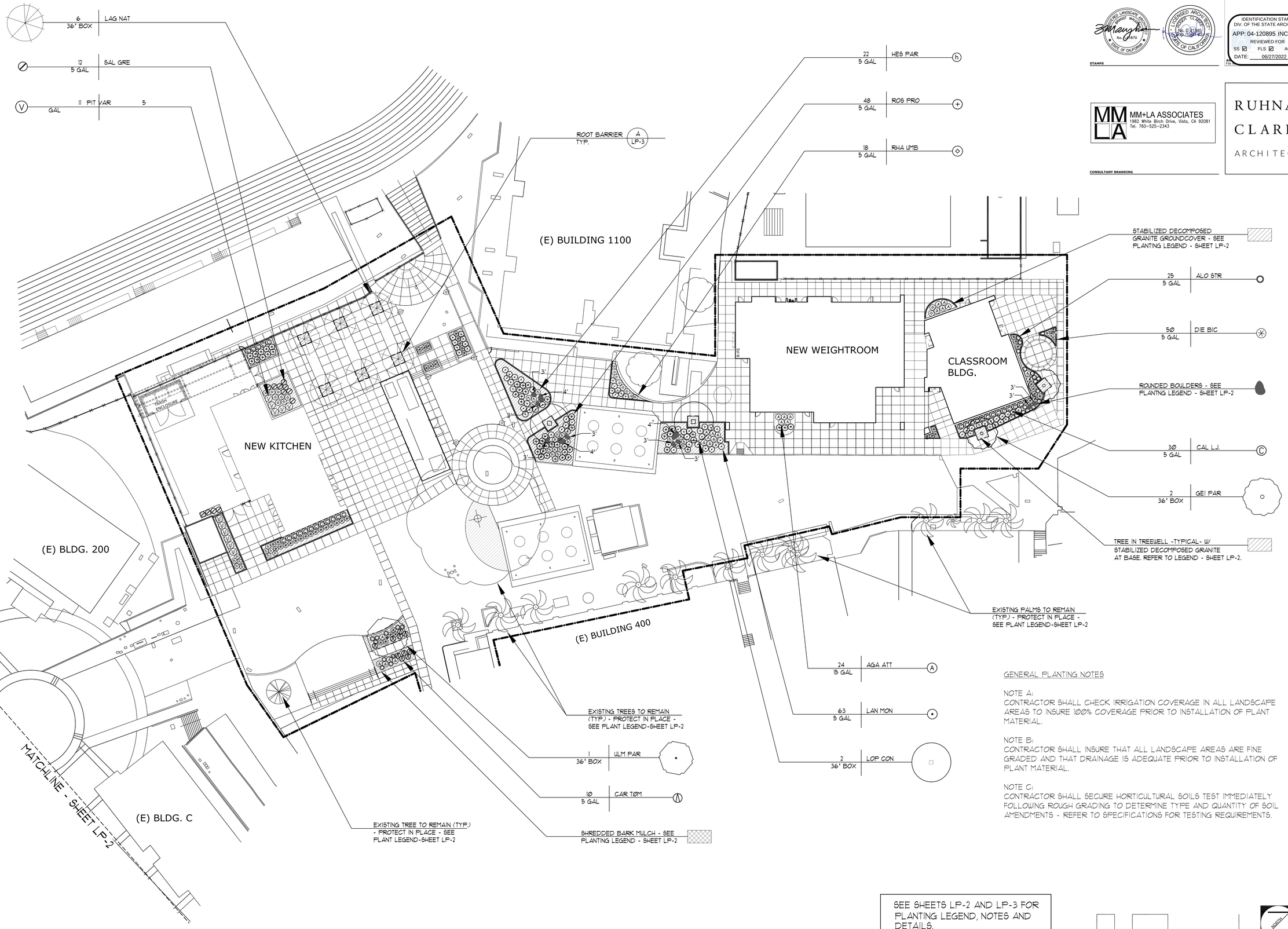

GENERAL PLANTING NOTES

NOTE A:
CONTRACTOR SHALL CHECK IRRIGATION COVERAGE IN ALL LANDSCAPE AREAS TO INSURE 100% COVERAGE PRIOR TO INSTALLATION OF PLANT MATERIAL.

NOTE B:
CONTRACTOR SHALL INSURE THAT ALL LANDSCAPE AREAS ARE FINE GRADED AND THAT DRAINAGE IS ADEQUATE PRIOR TO INSTALLATION OF PLANT MATERIAL.

NOTE C:
CONTRACTOR SHALL SECURE HORTICULTURAL SOILS TEST IMMEDIATELY FOLLOWING ROUGH GRADING TO DETERMINE TYPE AND QUANTITY OF SOIL AMENDMENTS - REFER TO SPECIFICATIONS FOR TESTING REQUIREMENTS.

STAMPS

IDENTIFICATION STAMP
DIV. OF THE STATE ARCHITECT
APP: 04-120895 INC:
REVIEWED FOR
SS ☑ FLS ☑ ACS ☑
DATE: 06/27/2022

CONSULTANT BRANDING

MM+LA ASSOCIATES
1982 White Birch Drive, Vista, CA 92081
Tel. 760-525-2343

RUHNAU CLARKE ARCHITECTS

PLANTING PLAN | SCALE: 1" = 20'-0" | REF.: | 1

PROJECT No.: 1-30-55
11/24/2021 10:24:25 AM

DRAWN BY: CHECKED BY:

ISSUE No.	DATE	DESCRIPTION	REVISION No.	DATE	DESCRIPTION
ISSUE No.	DATE	DESCRIPTION	REVISION No.	DATE	DESCRIPTION
ISSUE No.	DATE	DESCRIPTION	REVISION No.	DATE	DESCRIPTION
ISSUE No.	DATE	DESCRIPTION	REVISION No.	DATE	DESCRIPTION

RUHNAUCLARKE.COM
3775 TENTH STREET, RIVERSIDE CALIFORNIA 92501 (951) 684 4664 / 5751 PALMER WAY, SUITE C, CARLSBAD CALIFORNIA 92008 (760) 438 5899

GHS KITCHEN & WEIGHTROOM MOD
GROSSMONT HIGH SCHOOL
1100 MURRAY DR, EL CAJON, CA 92020
GROSSMONT UNION HIGH SCHOOL

PLANTING PLAN

LP-1

GHS KITCHEN & WEIGHTROOM MOD:

1-30-55

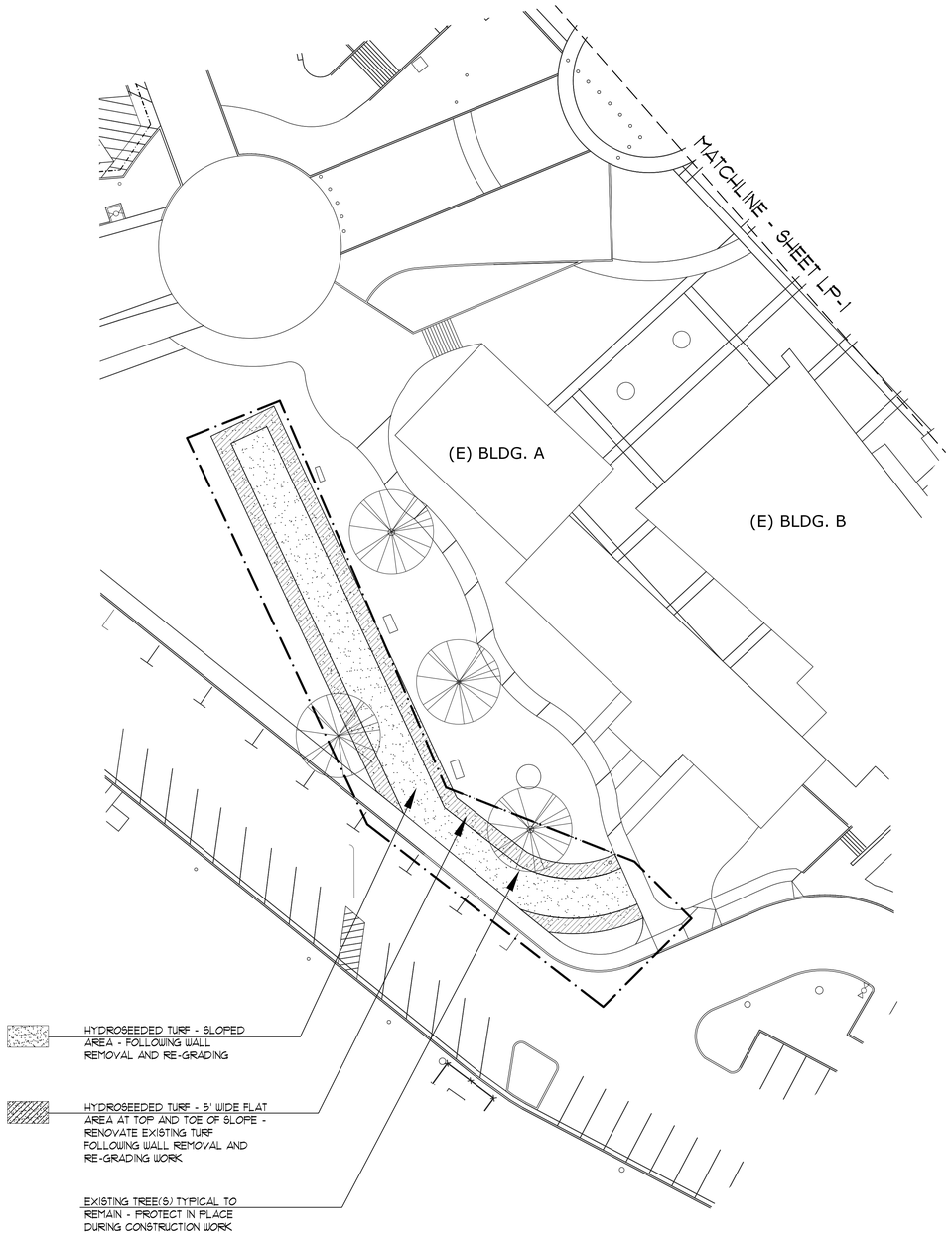

NOTE: ALL NEWLY SEEDED TURF AREAS SHALL BE FINE GRADED AND AMENDED IN ACCORDANCE WITH THE REQUIRED SOILS REPORT PRIOR TO SEEDING OPERATIONS.

0 10 20 40 80

SCALE 1"=20'-0"

NORTH

PLANTING PLAN

SCALE: 1" = 20'-0"
REF.:

2

STAMPS

IDENTIFICATION STAMP
DIV. OF THE STATE ARCHITECT
APP: 04-120895 INC:
REVIEWED FOR
SS ☑ FLS ☑ ACS ☑
DATE: 06/27/2022

MM+LA ASSOCIATES
1982 White Birch Drive, Vista, CA 92081
Tel. 760-525-2343

CONSULTANT BRANDING

RUHNAU CLARKE ARCHITECTS

PLANT LEGEND

SYM.	ABR.	SCIENTIFIC NAME - COMMON NAME	SIZE	QTY.	REMARKS	WATER REQ'D	PLANT FACTOR
TREES							
	GEI PAR	GEIJERA PARVIFLORA - AUSTRALIAN WILLOW	36" BOX	2	STANDARD DOUBLE STAKE	MODERATE	0.5
	LAG NAT	LAGERSTROEMIA I. 'NATCHEZ' - WHITE CRAPE MYRTLE	36" BOX	6	STANDARD DOUBLE STAKE	MODERATE	0.5
	LOP CON	LOPHOSTEMON CONFERTA - BRISBANE BOX	36" BOX	2	STANDARD DOUBLE STAKE	MODERATE	0.5
	ULM PAR	ULMUS PARVIFOLIA - CHINESE EVERGREEN ELM	36" BOX	1	STANDARD DOUBLE STAKE	MODERATE	0.5
SHRUBS							
A	AGA ATT	AGAVE ATTENUATA - FOXTAIL AGAVE	15 GAL	24	3' ON CENTER	LOW	0.2
	ALO STR	ALOE STRIATA - CORAL ALOE	5 GAL	25	30" ON CENTER	LOW	0.2
C	CAL L.J.	CALLISTEMON 'LITTLE JOHN' - DWARF BOTTLE BRUSH	5 GAL	30	3' ON CENTER	MODERATE	0.5
	CAR TOM	CARISSA G. 'TOMLINSON' - THORNLESS NATAL PLUM	5 GAL	10	3' ON CENTER	MODERATE	0.5
	DIE BIC	DIETES BICOLOR - FORTNIGHT LILY	5 GAL	50	3' ON CENTER	MODERATE	0.5
h	HES PAR	HESPERALOE PARVIFLORA - RED YUCCA	5 GAL	22	3' ON CENTER	LOW	0.2
	LAN MON	LANTANA MONTEVIDENSIS - TRAILING PURPLE LANTANA	5 GAL	63	3' ON CENTER	LOW	0.2
V	PIT VAR	PITTOSPORUM T. 'VARIEGATA' - VARIEGATED TOBIRA	5 GAL	11	4' ON CENTER	MODERATE	0.5
	RHA UMB	RHAPHIOLEPIS U. 'MINOR' - YEDDO HAWTHORN	5 GAL	18	3' ON CENTER	MODERATE	0.5
	ROS PRO	ROSMARINUS O. 'PROSTRATA' - PROSTRATE ROSEMARY	5 GAL	48	3' ON CENTER	LOW	0.2
	SAL GRE	SALVIA GREGII - AUTUMN SAGE	5 GAL	12	3' ON CENTER	LOW	0.2

GROUNDCOVER

SHREDDED BARK MULCH - 2" MINUS - 3" LAYER. SUPPLIER APPROVED BY LANDSCAPE ARCHITECT AND DISTRICT. SUBMIT SAMPLES FOR APPROVAL.

STABILIZED DECOMPOSED GRANITE - 3" LAYER OVER WEED BARRIER FABRIC. SUPPLIED BY SOUTHWEST BOULDER AND STONE - 877-792-7625 - 'MOJAVE GOLD FINES. COLOR AND SUPPLIER APPROVED BY DISTRICT. INSTALL WITH WEED BARRIER FABRIC BENEATH.

ROUNDED BOULDERS SUPPLIED BY SOUTHWEST BOULDER AND STONE 877-792-7625. USE 'DESERT SAND' TYPE. BURY 1/4 PER DETAIL BELOW. QUANTITIES: 8-3' DIAMETER, 3-4' DIAMETER.

HYDROSEEDED TURF MIX AS APPROVED BY DISTRICT - SHALL BE:

HULLED COMMON BERMUDA GRASS SEED - 5 LBS/1,000 SF
MIXED WITH PERENNIAL RYEGRASS - 10 LBS/1,000 SF

SEED SUPPLIED BY STOVER SEED COMPANY OR APPROVED SUPPLIER.

CONTRACTOR SHALL INCLUDE ADDITIONAL HYDROSEED COMPONENTS AS FOLLOWS:

MULCH	1,500 LBS/ACRE
BINDER	120 LBS/ACRE
FERTILIZER	TYPE AND RATE AS RECOMMENDED BY GROWER AND AS RECOMMENDED BY SOILS REPORT

SEE SHEET LP-3 FOR PLANTING DETAILS.

GHS KITCHEN & WEIGHTROOM MOD:

PROJECT No.: 1-30-55
11/24/2021 10:24:25 AM

DRAWN BY: CHECKED BY:

ISSUE No.	DATE	DESCRIPTION	REVISION No.	DATE	DESCRIPTION
ISSUE No.	DATE	DESCRIPTION	REVISION No.	DATE	DESCRIPTION
ISSUE No.	DATE	DESCRIPTION	REVISION No.	DATE	DESCRIPTION
ISSUE No.	DATE	DESCRIPTION	REVISION No.	DATE	DESCRIPTION

RUHNAUCLARKE.COM
3775 TENTH STREET, RIVERSIDE CALIFORNIA 92501 (951) 684 4664 / 5751 PALMER WAY, SUITE C, CARLSBAD CALIFORNIA 92008 (760) 438 5899

GHS KITCHEN & WEIGHTROOM MOD
GROSSMONT HIGH SCHOOL
1100 MURRAY DR, EL CAJON, CA 92020
GROSSMONT UNION HIGH SCHOOL

PLANTING PLAN/LEGEND

LP-2

1-30-55

STAMPS

IDENTIFICATION STAMP
DIV. OF THE STATE ARCHITECT
APP: 04-120895 INC:
REVIEWED FOR
SS ☑ FLS ☑ ACS ☑
DATE: 06/27/2022

MM+LA ASSOCIATES
1982 White Birch Drive, Vista, CA 92081
Tel. 760-525-2343

CONSULTANT BRANDING

RUHNAU CLARKE ARCHITECTS

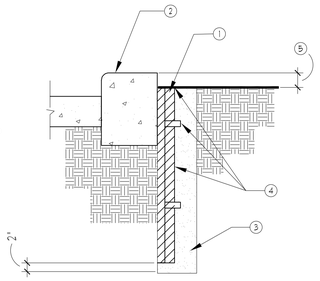

NOTE: USE IN ALL APPLICATIONS WHERE TREE TRUNK IS LOCATED WITHIN 5' OF EDGE OF ADJACENT HARDSCAPE PAVEMENT.

1. 24" X 24" INTERLOCKING ROOT CONTROL BARRIER PANELS - BY DEEP ROOT CORP. -16' OF BARRIER PER TREE.
2. SIDEWALK, CURB, SWALE OR PAVEMENT
3. ROOT CONTROL BARRIER TRENCH BACKFILLED WITH CLEAN SITE SOIL.
4. TOP OF ROOT CONTROL BARRIER FLUSH WITH GRADE. ROOT DEFLECTORS AND SOIL ANCHORS MUST FACE TREE.
5. 1" DEPTH IN D.G./MULCH AREAS.

NOTE: BARRIER SHALL BE FLUSH WITH VERTICAL CONCRETE SURFACE.

A ROOT CONTROL BARRIER
NO SCALE

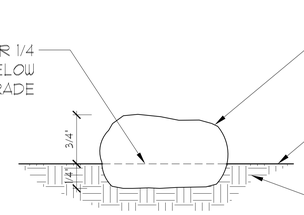

B BOULDER INSTALLATION DETAIL
NO SCALE

NOTE: MAINTAIN 80" - MINIMUM- CLEARANCE BETWEEN FINISH SURFACE AND UNDERSIDE OF LANDSCAPE FOLIAGE / BRANCHING ALONG PATH OF TRAVEL PER CBC 11338.8.2 / CBC FIG. 11B.28. TYPICAL FOR ALL TREES ADJACENT TO PAVEMENT.

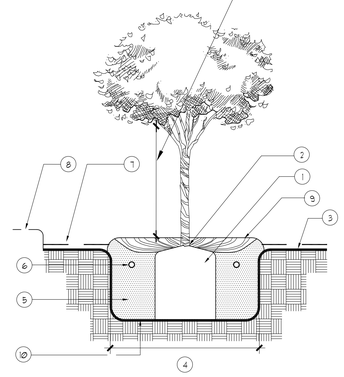

1. ROOTBALL.
2. CROWN-1" ABOVE FINISH GRADE.
3. FINISH GRADE.
4. 3 X ROOTBALL WIDTH.
5. PLANTING BACKFILL . (USE NATIVE SOIL ONLY FOR DESERT PLANTS).
6. PLANT TABLETS.
7. DECOMPOSED GRANITE/SHREDDED MULCH.
8. TOP OF PAVING.
9. 6" HIGH WATERING BASIN.
10. UNDISTURBED NATIVE SOIL.

C TREE PLANTING
NO SCALE

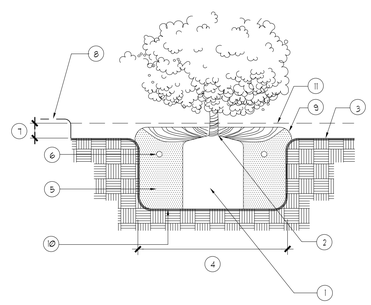

1. ROOTBALL.
2. CROWN-1" ABOVE FINISH GRADE.
3. FINISH GRADE.
4. 3 X ROOTBALL DIA.
5. PLANTING BACKFILL. (USE NATIVE SOIL ONLY FOR DESERT PLANTS).
6. PLANT TABLETS.
7. 3" MAX. DEPTH.
8. TOP OF PAVING.
9. 4" HIGH WATERING BASIN.
10. UNDISTURBED NATIVE SOIL.
11. DECOMPOSED GRANITE/ SHREDDED MULCH.

D SHRUB PLANTING
NO SCALE

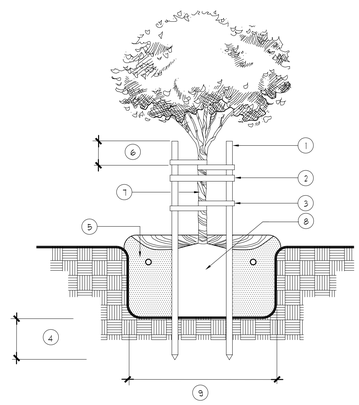

1. 3" DIA. X 10' LODGEPOLE PINE STAKE (2 REQ'D.)
2. 1 X 2" WOOD BRACE.
3. VINYL TREE TIE (2 REQ'D. PER STAKE).
4. 24" MIN.
5. SEE TREE PLANTING DETAIL.
6. 12" MIN.
7. TREE TRUNK.
8. ROOTBALL.
9. 3x ROOTBALL WIDTH

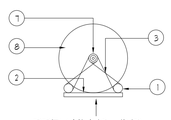

PREVAILING WIND
PLAN VIEW

E DOUBLE STAKING DETAIL
NO SCALE

GHS KITCHEN & WEIGHTROOM MOD:

PROJECT No.: 1-30-55
11/24/2021 10:24:25 AM

DRAWN BY: CHECKED BY:

ISSUE No.	DATE	DESCRIPTION	REVISION No.	DATE	DESCRIPTION
ISSUE No.	DATE	DESCRIPTION	REVISION No.	DATE	DESCRIPTION
ISSUE No.	DATE	DESCRIPTION	REVISION No.	DATE	DESCRIPTION
ISSUE No.	DATE	DESCRIPTION	REVISION No.	DATE	DESCRIPTION

RUHNAUCLARKE.COM
3775 TENTH STREET, RIVERSIDE CALIFORNIA 92501 (951) 684 4664 / 5751 PALMER WAY, SUITE C, CARLSBAD CALIFORNIA 92010 (760) 438 5899

GHS KITCHEN & WEIGHTROOM MOD
GROSSMONT HIGH SCHOOL
1100 MURRAY DR, EL CAJON, CA 92020
GROSSMONT UNION HIGH SCHOOL

PLANTING DETAILS

LP-3

1-30-55

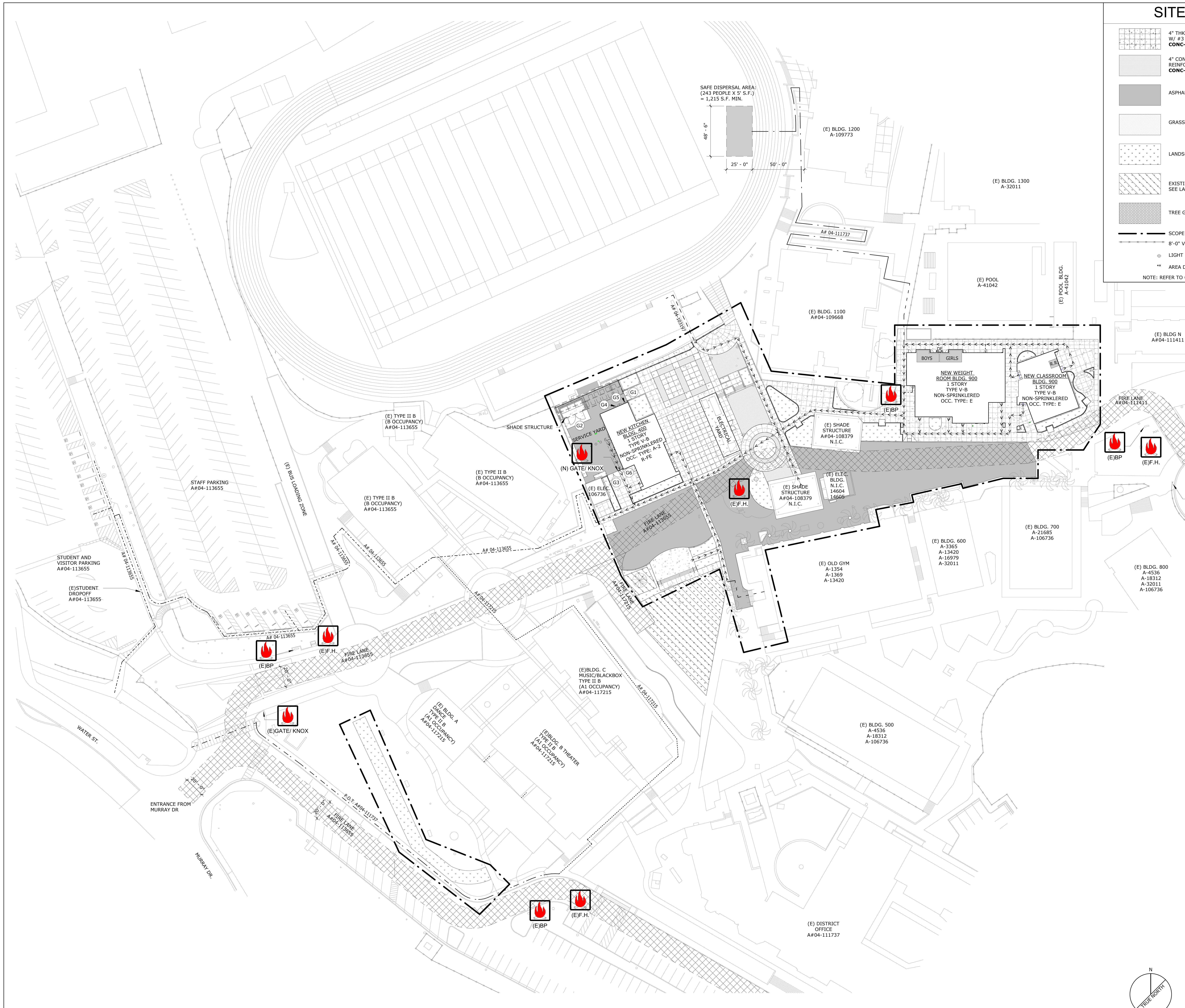

SITE PLAN LEGEND

- 4" THK. CONCRETE FLATWORK REINFORCED W/ #3 @18" O.C. EA. WAY AT MID DEPTH, **CONC-2** (4 / ASD-1)
- 4" CONCRETE FLATWORK W/ STAMPED TEXTURE FINISH REINFORCED W/ #3 @18" O.C. EA. WAY AT MID DEPTH, **CONC-3** (4 / ASD-1)
- ASPHALTIC CONCRETE PAVING PER CIVIL DWG. (2 / C3.0)
- GRASSCRETE PAVING PER DETAIL (- / ---)
- LANDSCAPE/ DECOMPOSED GRANITE, SEE LANDSCAPE DWG.
- EXISTING LANDSCAPE/ DECOMPOSED GRANITE TO REMAIN, SEE LANDSCAPE DWG.
- TREE GRATES
- SCOPE OF WORK LINE
- 8'-0" VINYL COATED CHAIN LINK FENCE, U.N.O.
- LIGHT POLE PER E1.1
- AREA DRAIN PER C-2.0

NOTE: REFER TO COLORS, MATERIALS AND FINISHES LEGEND FOR MORE INFO. (- / ID-1.0)

LICENSED ARCHITECT ROGER CLARKE No. C-21340 Exp. 10-31-23 STATE OF CALIFORNIA

IDENTIFICATION STAMP
DIV. OF THE STATE ARCHITECT
APP: 04-120895 INC:
REVIEWED FOR
SS ☑ FLS ☑ ACS ☑
DATE: 06/27/2022

STAMPS

RUHNAU
CLARKE
ARCHITECTS

CONSULTANT BRANDING

GENERAL NOTES

1. ALL FIRE HYDRANTS, FLOW RATES, AND CLEARANCES ARE EXISTING WILL REMAIN UNCHANGED.
2. DURING CONSTRUCTION PROVIDE CLEAR FIRE ACCESS AT ALL TIMES.
3. ALL STRUCTURES ARE IN COMPLAINCE WITH STATE OF CALIFORNIA FIRE CODE STANDARDS.
4. ALL GATES ON P.O.T. MUST HAVE PANIC HARDWARE.

FIRE ACCESS LEGEND

NOTE: FOR ADDITIONAL SITE INFORMATION RELEVANT TO THE FIRE ACCESS SITE PLAN REVIEW, REFER TO SHEET AS-1.1.

- GATE/ KNOX — 20'-0" MIN. WIDE FIRE TRUCK ACCESS GATES. KNOX PADLOCK OR LOCKBOX (MIN. KNOX BOX 3200 SERIES MODEL)
- P.I.V. — POST INDICATOR VALVE
- F.H. — FIRE HYDRANT: (E) F.H.: EXISTING FIRE HYDRANT; (N) F.H.: NEW FIRE HYDRANT
- BP — BACKFLOW PREVENTER

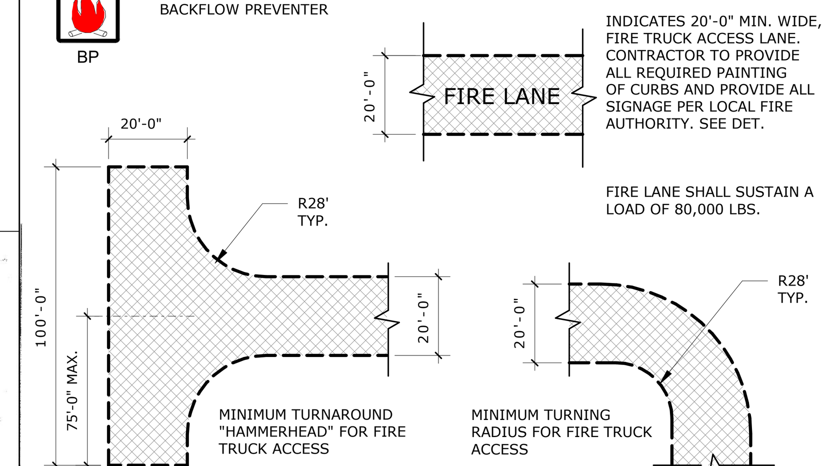

INDICATES 20'-0" MIN. WIDE, FIRE TRUCK ACCESS LANE. CONTRACTOR TO PROVIDE ALL REQUIRED PAINTING OF CURBS AND PROVIDE ALL SIGNAGE PER LOCAL FIRE AUTHORITY. SEE DET.

FIRE LANE SHALL SUSTAIN A LOAD OF 80,000 LBS.

GATE SCHEDULE

NO.	GATE SIZE	MATERIAL	HARDWARE SET	NOTES	ELEV. DETAIL
G1	PR 5' - 0" X 8' - 0"	CLF.	19	1,3	16/ASD-1
G2	PR 7'-10" X 8' - 0"	STL.	19	3	10/ASD-1
G3	PR 6' - 0" X 8' - 0"	CLF.	19	1,3	16/ASD-1
G4	PR 6'-0" X 8' - 4"	CLF.	19		16/ASD-1
G5	PR 6'-0" X 8' - 4"	CLF.	19		16/ASD-1
G6	3'-0" x 8'-0"	CLF.	22	2	20/ASD-1
G7	PR 4'-3" X 8' - 0"	STL.	19	3	10/ASD-1

GATE NOTES
1. PROVIDE PADLOCK & KNOX BOX BY KNOX BOX COMPANY PER HEARTLAND FIRE AND RESCUE REQUIREMENTS. SURFACE MOUNT ON ADJACENT FENCE.
2. PROVIDE PANIC HARDWARE.
3. PROVIDE HARDWARE PER SANITAITON DEPARTMENT REQUIREMENTS.

GATE LEGEND
STL. STEEL

LEGEND PATH OF TRAVEL

- EXISTING PATH OF TRAVEL (P.O.T.) A# 04- 103197
- EXISTING PATH OF TRAVEL (P.O.T.) A# 04- 113655
- EXISTING PATH OF TRAVEL (P.O.T.) A# 04- 117215
- EXISTING PATH OF TRAVEL (P.O.T.) A# 04- 111737
- EXISTING PATH OF TRAVEL (P.O.T.) A# 04- 106736
- EXISTING PATH OF TRAVEL (P.O.T.) A# 04- 109733
- NEW PATH OF TRAVEL (P.O.T.)

PATH OF TRAVEL (P.O.T.) AS INDICATED IS A BARRIER FREE ACCESS ROUTE WITHOUT ANY ABRUPT VERTICAL CHANGES EXCEEDING 1/2" BEVELED AT 1:2 MAXIMUM SLOPE, EXCEPT THAT LEVEL CHANGES DO NOT EXCEED 1/4" VERTICAL AND IS AT LEAST 48" WIDE. SURFACE IS SLIP RESISTANT, STABLE, FIRM AND SMOOTH. CROSS-SLOPE DOES NOT EXCEED 2% AND SLOPE IN THE DIRECTION OF TRAVEL IS LESS THAN 5% UNLESS OTHERWISE INDICTED. (POT) SHALL BE MAINTAINED FREE OF OVERHANGING OBSTRUCTIONS TO 80" MINIMUM AND PROTRUDING OBJECTS GREATER THAN 4" PROJECTION FROM WALL AND ABOVE 27" AND LESS THAN 80". ARCHITECT TO VERIFY THAT ALL BARRIERS IN THE PATH OF TRAVEL HAVE BEEN REMOVED OR WILL BE REMOVED UNDER THIS PROJECT, AND PATH OF TRAVEL COMPLIES WITH CBC 11B-303 & 11B-304 GRATES IN P.O.T. SHALL HAVE MAX. GRID/OPENINGS OF 1/2" IN THE DIRECTION OF TRAFFIC FLOW.

DESIGN PROFESSIONAL IN GENERAL RESPONSIBLE CHARGE STATEMENT: THE P.O.T. IDENTIFIED IN THESE CONSTRUCTION DOCUMENTS IS COMPLIANT WITH THE CURRENT APPLICABLE CALIFORNIA BUILDING CODE ACCESSIBILITY PROVISIONS FOR THE PATH OF TRAVEL REQUIREMENTS FOR ALTERATIONS, ADDITIONS AND STRUCTURAL REPAIRS. AS PART OF THE DESIGN OF THIS PROJECT, THE P.O.T. WAS EXAMINED AND ANY ELEMENTS, COMPONENTS OR PORTIONS OF THE P.O.T. THAT WERE DETERMINED TO BE NONCOMPLIANT 1) HAVE BEEN IDENTIFIED AND 2) THE CORRECTIVE WORK NECESSARY TO BRING THEM INTO COMPLAINCE HAS BEEN INCLUDED WITHIN THE SCOPE OF THIS PROJECT'S WORK THROUGH DETAILS, DRAWINGS AND SPECIFICATIONS INCORPORATED INTO THESE CONSTRUCTION DOCUMENTS. ANY NONCOMPLIANT ELEMENTS, COMPONENTS OR PORTIONS OF THE P.O.T. THAT WILL NOT BE CORRECTED BY THIS PROJECT BASED ON VALUATION THRESHOLD LIMITATIONS OR A FINDING OF UNREASONABLE HARDSHIP ARE SO INDICATED IN THESE CONSTRUCTION DOCUMENTS.

DURING CONSTRUCTION, IF P.O.T. ITEMS WITHIN THE SCOPE OF THE PROJECT REPRESENTED AS CODE COMPLIANT ARE FOUND TO BE NONCONFORMING BEYOND REASONABLE CONSTRUCTION TOLERANCES, THEY SHALL BE BROUGHT INTO COMPLIANCE WITH THE CBC AS A PART OF THIS PROJECT BY MEANS OF A CONSTRUCTION CHANGE DOCUMENT.

DSA 810

FIRE & LIFE SAFETY SITE CONDITIONS SUBMITTAL

Division of the State Architect (DSA) documents referenced within this publication are available on the DSA Forms or DSA Publications webpages.

To facilitate the Division of the State Architect's (DSA) fire and life safety plan review of project site conditions, DSA requires the design professional to provide the following information at time of project submittal for projects consisting of construction of a new campus, construction of new building(s), additions to existing buildings, and for site alternate design means for fire department emergency vehicle access, and fire suppression water supply.

Information associated with compliance items 1 through 3 below is to be provided for all project types indicated above. Information associated with items 4 through 7 is to be completed when an alternate means is utilized. Acknowledgement by the school district and signature from the Local Fire Authority (LFA) is only required when an alternate design means is being requested.

The Project Information and Fire & Life Safety Information sections are to be completed for all projects and imaged onto the fire access site plan. When an alternate design/means is proposed, all sections on pages 1 and 2 are to be completed and imaged on the fire access site plan.

For additional information refer to the instructions at the end of this form and DSA Policy *PL 09-01: Fire Flow for Buildings.*

PROJECT INFORMATION

School District/Owner:	GROSSMONT UNION HIGH SHCOOL DISTRICT
Project Name/School:	GROSSMONT HIGH SHCOOL
Project Address:	1100 MURRAY DRIVE , EL CAJON 92020

FIRE & LIFE SAFETY INFORMATION

1.	Has a fire hydrant flow test been performed within the past 12 months? (If yes, provide a copy of the test data.)	Yes ☐		No ☑
2.	Was the fire hydrant water flow test performed as part of this LFA review?	Yes ☐		No ☑
3.	Is the project located within a designated fire hazard severity zone (FHSZ) as established by Cal-Fire? (If yes, indicate FHSZ classification below.)	Yes ☐		No ☑
	Refer to the following website for FHSZ locations: http://egis.fire.ca.gov/FHSZ/	Moderate ☐	High ☐	Very High ☐
	Wildland Interface Area (WIFA) (If any designations are checked, project design must meet the requirements of CBC Chapter 7A.)			WIFA ☐

DGS DSA 810 (revised 12/29/20) DIVISION OF THE STATE ARCHITECT — DEPARTMENT OF GENERAL SERVICES — Page 1 of 4 STATE OF CALIFORNIA

DSA 810
FIRE & LIFE SAFETY SITE CONDITIONS SUBMITTAL

CONDITION MEANS AND METHODS RESOLUTION — ALTERNATE ACCEPTED

		Yes	No	N/A	N/R
4.	Emergency vehicle access roadways do not meet CFC requirements.			✔	
4a.	**Acceptable Alternate:** Emergency vehicle and personnel access as proposed by the project architect is acceptable for providing fire suppression and protection of life and property.				
5.	**Fire Hydrants:** Number and spacing does not meet CFC requirements.			✔	
5a.	**Acceptable Alternate:** Number of fire hydrants and spacing as proposed by the project architect is acceptable for fire suppression and protection of life and property.				
6.	**Fire Hydrants:** Water flow and pressure are less than CFC minimum.				
6a.	**Acceptable Alternate:** The available flow and pressure is acceptable for providing fire suppression and protection of life and property.				
7.	Location of fire department connection(s) serving fire sprinkler systems or standpipe systems does not meet CFC requirements.			✔	
7a.	**Acceptable Alternate:** The location of fire department connection serving the fire sprinkler system and/or standpipe system is acceptable for providing fire suppression and protection of life and property.				

School District Acceptance of Acceptable Design Alternates

By signing this form, the school district acknowledges and accepts the proposed design as an alternative to California Building Code (CBC) and California Fire Code (CFC) minimum requirements, as indicated by one or more of the conditions indicated at items 4a, 5a, 6a or 7a, for providing fire and life safety protection of life and property.

Accepted by: ______ Title: ______

Signature: ______ Date: ______

LOCAL FIRE AUTHORITY (LFA) INFORMATION

LFA Agency Name: Heartland Fire & Rescue
LFA Review Official: Shawn Richardson
Title: Fire Marshal — Work Phone: (619) 667-1466
Work Email: Srichardson@heartlandfire.org

LFA Reviewer's Signature: [signature] Date: 6/21/22

* Fire reviewed for access and existing water supply (no fire flow provided) only. FD access shall be maintained an unobstructed width of 20ft. and height of 13ft. 6in. – SR

DGS DSA 810 (revised 12/29/20) DIVISION OF THE STATE ARCHITECT — DEPARTMENT OF GENERAL SERVICES — Page 2 of 4 STATE OF CALIFORNIA

OVERALL SITE PLAN — SCALE: 1" = 40'-0" — REF.: 1/A1-4.0 — 1

CODE ANALYSIS

BLDG. #	BUILDING NAME	OCC. TYPE	CONST. TYPE (TABLE 504)	STORY (ALLOW.)	STORY (ACTUAL)	BLDG. HT. (ALLOW.)	BLDG. HT. (ACTUAL)	BLDG. AREA (ALLOW.)	BLDG. AREA (ACTUAL)	SEC. 508 SEPARATION BETWEEN OCCUPANCY	AUTO. SPRINKLER SYSTEM	TABLE 601 & 602 FIRE RESISTIVE REQUIREMENTS: PRIMARY STRUCT. FRAME	BEARING WALLS EXT.	BEARING WALLS INT.	NON-BEARING WALLS EXT.	NON-BEARING WALLS INT.	FLOOR CONST.	ROOF CONST.	TABLE 705.8 MAXIMUM AREA OF EXTERIOR WALL OPENINGS	TOTAL OCCUPANTS	REMARKS
900	(N) WEIGHT ROOM CLASSROOM BLDG.	E	V-B (COMBUSTIBLE)	1	1	40'	22'	9,500 SF	7,942 SF	N/A	NO	0	0	0	0	0	0	0	NORTH FACADE: 5 TO LESS THAN 10 (UP, NS) = 10% EAST FACADE: 30 OR GREATER (UP, NS) = NO LIMIT SOUTH FACADE: 30 OR GREATER (UP, NS) = NO LIMIT WEST FACADE: 30 OR GREATER (UP, NS) = NO LIMIT	110	
400	(N) KITCHEN BUILDING	A-2	V-B (COMBUSTIBLE)	1	1	40'	17'	6,000 SF	2,998 SF	N/A	NO	0	0	0	0	0	0	0	NORTH FACADE: 30 OR GREATER (UP, NS) = NO LIMIT EAST FACADE: 30 OR GREATER (UP, NS) = NO LIMIT SOUTH FACADE: 30 OR GREATER (UP, NS) = NO LIMIT WEST FACADE: 20 TO LESS THAN 25 (UP, NS) = 45%	229	

PROJECT No. :1-30-55
6/21/2022 3:49:10 PM

DRAWN BY: CHECKED BY:
ISSUE No.______ DATE________ DESCRIPTION______
ISSUE No.______ DATE________ DESCRIPTION______
ISSUE No.______ DATE________ DESCRIPTION______
ISSUE No.______ DATE________ DESCRIPTION______

REVISION No.______ DATE________ DESCRIPTION______
REVISION No.______ DATE________ DESCRIPTION______
REVISION No.______ DATE________ DESCRIPTION______
REVISION No.______ DATE________ DESCRIPTION______

RUHNAUCLARKE.COM
3775 TENTH STREET, RIVERSIDE CALIFORNIA 92501 (951) 684 4664 / 5751 PALMER WAY, SUITE C, CARLSBAD CALIFORNIA 92010 (760) 438 5899

GHS KITCHEN & WEIGHTROOM
GROSSMONT HIGH SCHOOL
1100 MURRAY DR, EL CAJON, CA 92020
GROSSMONT UNION HIGH SCHOOL

CODE / EGRESS SITE PLAN

AS0.2

1-30-55

GHS KITCHEN & WEIGHTROOM: 06/13/2022 DSA SUBMITTAL

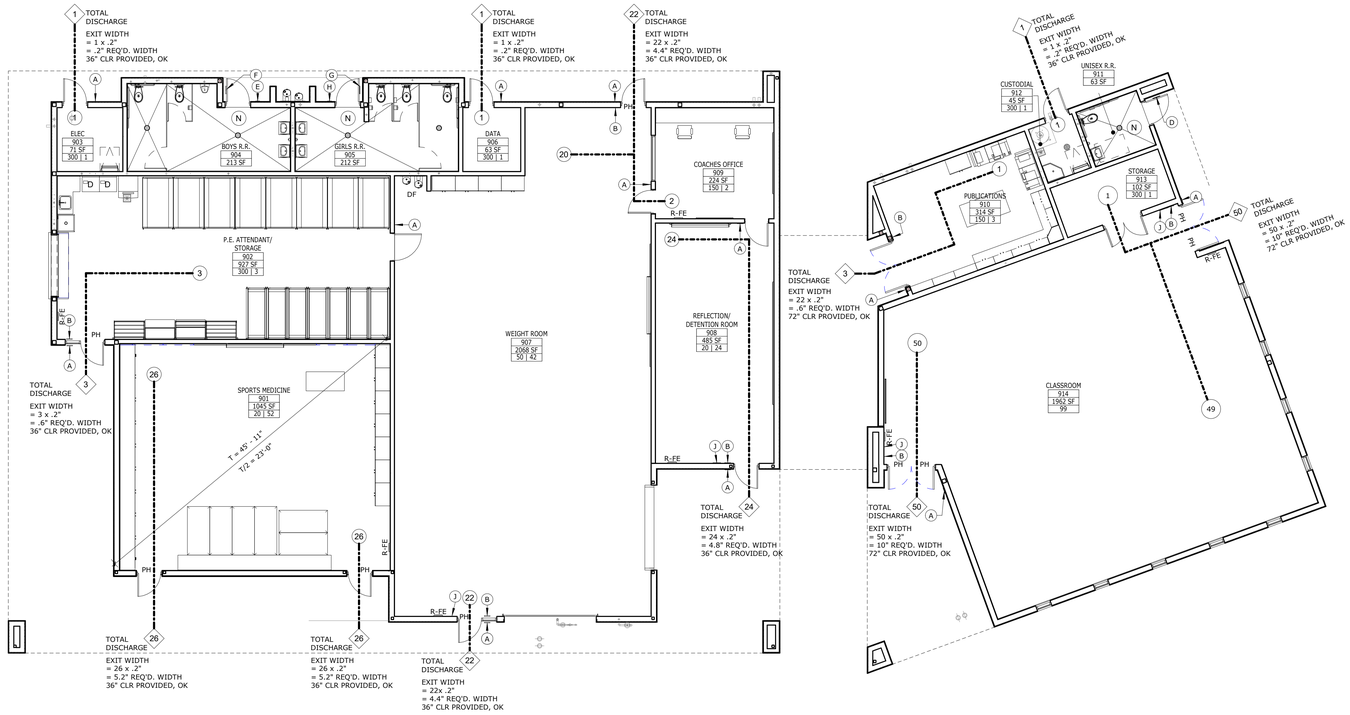

N
TRUE NORTH

BUILDING 900 FLOOR PLAN

SCALE: 1/8" = 1'-0"
REF.: 1/A1-4.0

1

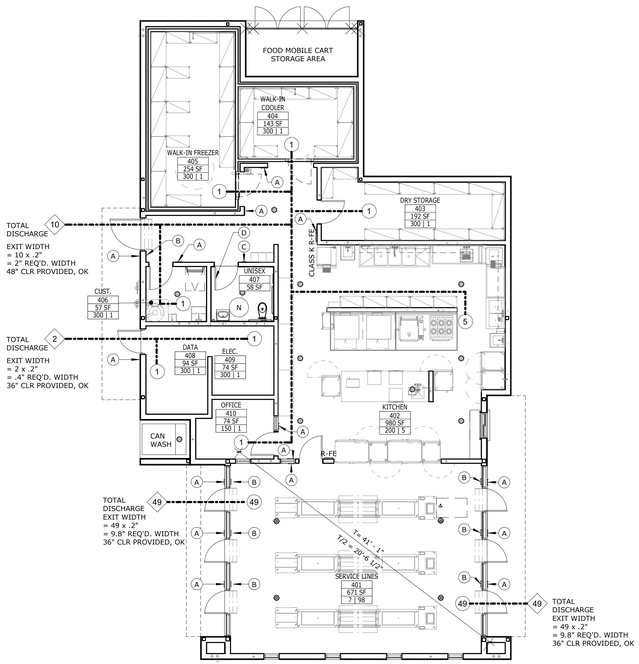

N
TRUE NORTH

BUILDING 400 FLOOR PLAN

SCALE: 1/8" = 1'-0"
REF.: 1/A1-4.0

2

STAMPS

LICENSED ARCHITECT
RUSSELL CLARKE
No. C-31940
Exp. 12/31/22
STATE OF CALIFORNIA

IDENTIFICATION STAMP
DIV. OF THE STATE ARCHITECT
APP: 04-120895 INC:
REVIEWED FOR
SS ☑ FLS ☑ ACS ☑
DATE: 06/27/2022
AD
File No.

CONSULTANT BRANDING

RUHNAU
CLARKE
ARCHITECTS

SIGNAGE NOTES

1. REFER TO SIGNAGE SCHEDULE IN SECTION 10 14 00 FOR MORE INFORMATION.
2. SEE DETAIL (AD-1.0) FOR SIGNAGE ATTACHMENTS AND LOCATIONS
3. ALL DOORS TO HAVE A 90 DEGREE SWING LIMIT WHERE TACTILE SIGNAGE IS LOCATED ON HINGE SIDE OF DOOR
4. ALL EXTERIOR AND INTERIOR ROOM IDENTIFICATION, DIRECTIONAL AND SAFETY SIGNS PER AD-1.0.

ASSISTIVE LISTENING DEVICE TABLE (PER CBC 11B-219 &11B-706)

BUILDING 900 (WEIGHT ROOM/ CLASSROOM)

ROOM NO.	ROOM NAME	OCCUPANT LOAD
901	SPORTS MEDICINE	52
907	WEIGHT ROOM	42
908	REFLECTION/DETENTION ROOM	24
914	CLASSROOM	99
TOTAL OCCUPANT LOAD (ASSEMBLY AREAS) BUILDING 900		217
4% REQ. NUMBER OF ASSISTIVE LISTENING DEVICES		9
25% OF LISTENING DEVICES TO BE HEARING AID COMPATIBLE		3

SIGNAGE SCHEDULE

TYPE MARK	SIGN TYPE
A	ROOM IDENTIFICATION SIGN PER DETAIL 3/AD-1.0
B	EXIT DOOR SIGN PER DETAIL 4/AD-1.0
C	STAFF UNISEX TOILET ROOM SIGN PER DETAIL 10/AD-1.0
D	STAFF UNISEX TOILET DOOR SIGN PER DETAIL 9/AD-1.0
E	BOY'S RESTROOM IDENTIFICATION SIGN PER DETAIL 8/AD-1.0
F	BOYS / MENS RESTROOM DOOR SIGN PER DETAIL 7/AD-1.0
G	GIRLS / WOMENS TOILET DOOR SIGN PER DETAIL 7/AD-1.0
H	GIRL'S RESTROOM IDENTIFICATION SIGN PER DETAIL 8/AD-1.0
J	ASSISTED LISTENING SIGN PER DETAIL 2/AD-1.0

EGRESS & SIGNAGE LEGEND

R-FE — SEMI-RECESSED FIRE EXTINGUISHER, PER DETAIL (2/AD-8.0)
MAXIMUM TRAVEL DISTANCE IDENTIFIED ON PLANS, PER CBC 2019 SECTION 906.

NOTE: USE K-TYPE FIRE EXTINGUISHER IN **BLDG 400** PER (-/K1)

(#) ROOM OCCUPANCY DISCHARGE

(N) NON-OCCUPIED ROOM

(N) TOTAL OCCUPANCY DISCHARGE

PATH OF TRAVEL / EGRESS. TRAVEL DISTANCE SHALL NOT BE MORE THAN 250 FT IN SPRINKLERED BUILDINGS PER CBC SECTION 1028.7

ROOM TAG
Room name 1001 Room Area # | ###
OCCUPANT LOAD
OCCUPANT LOAD FACTOR

PH — PANIC HARDWARE

(A) SIGNAGE PER SIGNAGE SCHEDULE (-/AS0.3)

KEY PLAN
NTS

GHS KITCHEN & WEIGHTROOM: 06/13/2022 DSA SUBMITTAL

PROJECT No. :1-30-55
6/21/2022 3:16:45 PM

DRAWN BY: _____ CHECKED BY: _____

ISSUE No.____ DATE____ DESCRIPTION____
ISSUE No.____ DATE____ DESCRIPTION____
ISSUE No.____ DATE____ DESCRIPTION____
ISSUE No.____ DATE____ DESCRIPTION____

REVISION No.____ DATE____ DESCRIPTION____
REVISION No.____ DATE____ DESCRIPTION____
REVISION No.____ DATE____ DESCRIPTION____
REVISION No.____ DATE____ DESCRIPTION____

RUHNAUCLARKE.COM
3775 TENTH STREET, RIVERSIDE CALIFORNIA 92501 (951) 684-4664 / 5751 PALMER WAY, SUITE C, CARLSBAD CALIFORNIA 92010 (760) 438 5899

GHS KITCHEN & WEIGHTROOM
GROSSMONT HIGH SCHOOL
1100 MURRAY DR, EL CAJON, CA 92020
GROSSMONT UNION HIGH SCHOOL

ENLARGED EGRESS PLANS

AS0.3

1-30-55

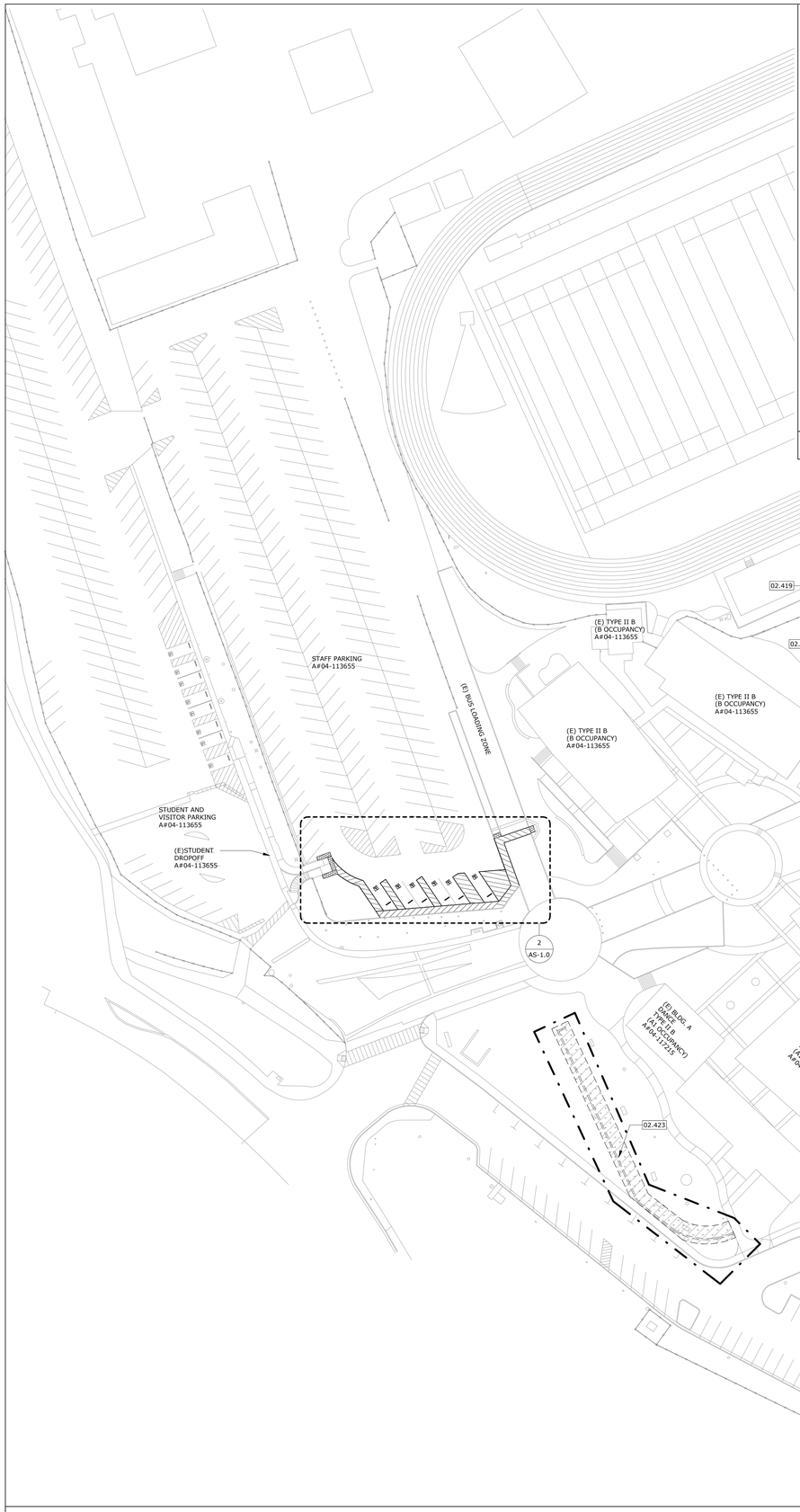

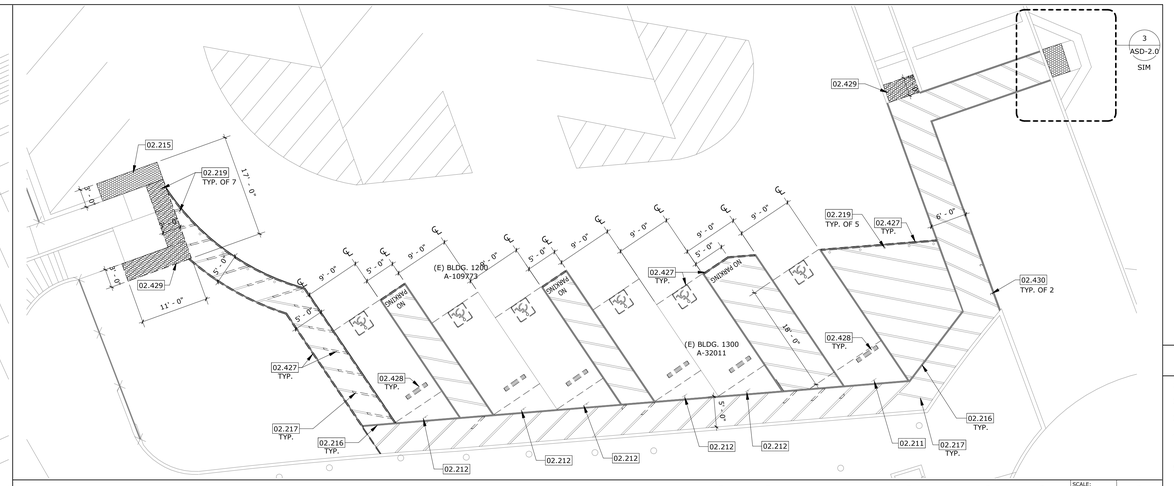

ENLARGED STAFF PARKING - DEMOLITION

SCALE: 1" = 10'-0"
REF.: 1/AS-1.0

2

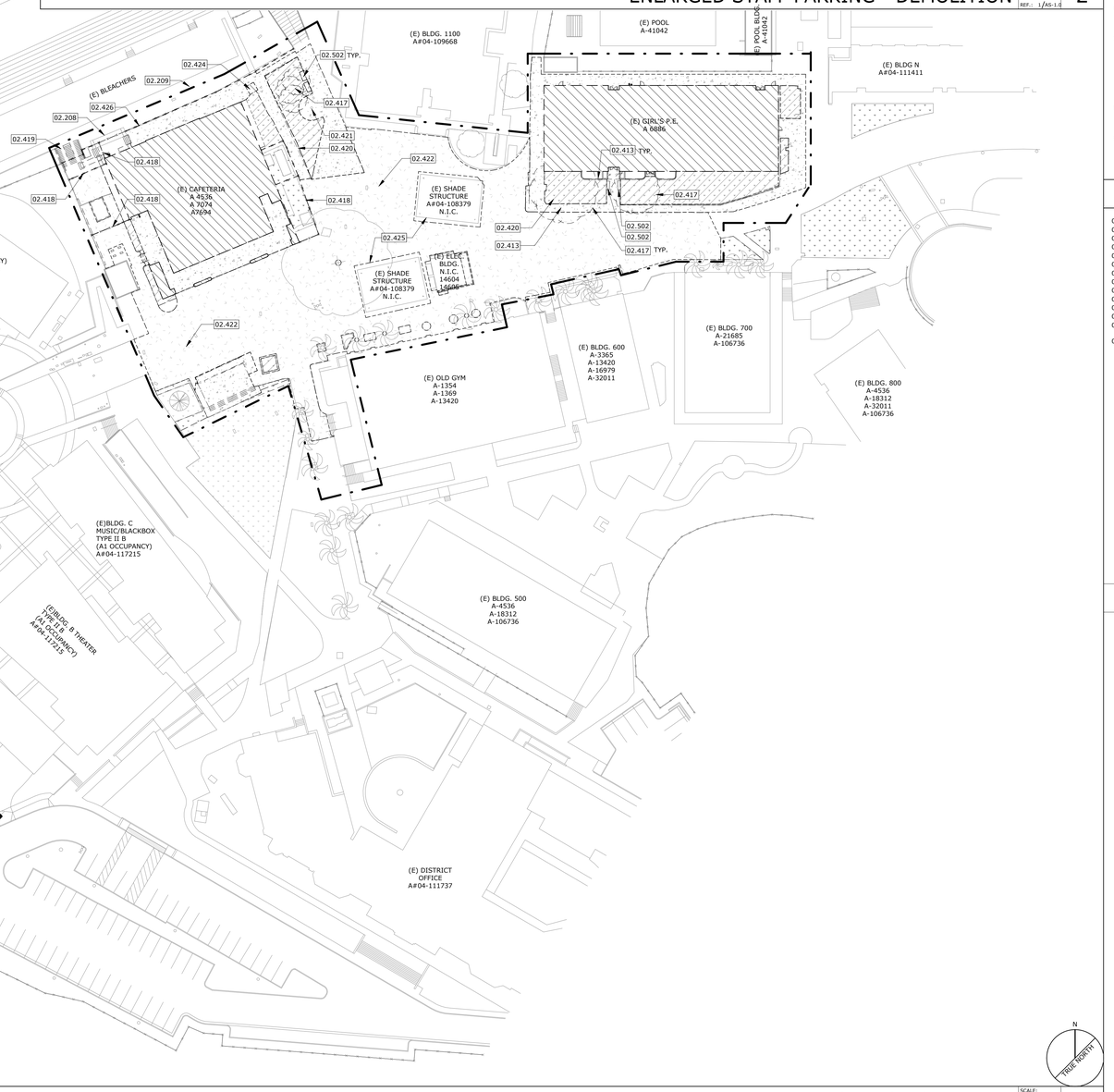

DEMOLITION SITE PLAN

SCALE: 1" = 40'-0"
REF.: 1/A1-4.0

1

STAMPS

LICENSED ARCHITECT
RUHNAU CLARKE
No. C-31040
Exp. 12/31/22
STATE OF CALIFORNIA

IDENTIFICATION STAMP
DIV. OF THE STATE ARCHITECT
APP: 04-120895 INC:
REVIEWED FOR
SS ☑ FLS ☑ ACS ☑
DATE: 06/27/2022

AGENCY
File No:

CONSULTANT BRANDING

RUHNAU
CLARKE
ARCHITECTS

GENERAL NOTES

1. ALL EXISTING CONDITIONS TO REMAIN U.N.O.
2. PATCH AND REPAIR ANY PAVING DAMAGED DURING DEMOLITION, MATCH EXISTING.
3. PROVIDE FIRE PROTECTION DURING DEMOLITION IN ACCORDANCE WITH CBC 2019 CHAPTER 33.
4. THE CONTRACTOR IS RESPONSIBLE FOR THE DEMOLITION OF THE SITE AND IT IS THEIR SOLE RESPONSIBILITY TO VISIT THE SITE AND DETERMINE THE EXTENT OF THE DEMOLITION BASED UPON THE PROPOSED NEW WORK.
5. THE CONTRACTOR IS RESPONSIBLE FOR THE REMOVAL AND DISPOSAL OF ALL ITEMS THAT ARE TO BE DEMOLISHED (ABOVE AND BELOW GROUND). ANY HAZARDOUS MATERIALS ENCOUNTERED SHALL BE BROUGHT TO THE ATTENTION OF THE OWNER AND BE REMOVED AS REQUIRED BY STATE AND LOCAL LAWS.
6. AS REQUIRED BY NEW WORK, CLEAR AREA, REMOVE ALL ITEMS INCLUDING BUT NOT LIMITED TO WALLS/FOOTING, PAVING, FENCING, STEPS, RAMPS, RAILING, SHRUBS, TREES, ROCKS, ETC., U.N.O.
7. PREPARE GRADE FOR INCLUDING BUT NOT LIMITED TO NEW FLOOR SLABS, PAVING, PLANTING, ETC. NOTIFY THE PROJECT GEOTECHNICAL ENGINEER PRIOR TO SITE PREPARATION. PROJECT GEOTECHNICAL ENGINEER SHALL OBSERVE THE SLAB SUB GRADE PREPARATION AND EXCAVATIONS, AND THE REMOVAL AND RECOMPACTION PROCESS. CLEAR, GRUB, GRADE AND REMOVE TREES INCLUDING ROOT SYSTEM. RESTORE GRADE. VERIFY SUB GRADE WITH GEOTECHNICAL ENGINEER. SCARIFICATION, MOISTURE CONDITION AND COMPACTING MAY BE NECESSARY AS DIRECTED BY GEOTECHNICAL ENGINEER. PROVIDE NEW NON-EXPANSIVE, GRANULAR, COMPACTED FILL.
8. REMOVE SITE UTILITY SYSTEMS BEING REPLACED AS SHOWN IN THE CONSTRUCTION DOCUMENTS, INCLUDING BUT NOT LIMITED TO IRRIGATION SYSTEMS, DRAINAGE SYSTEMS. MAINTAIN PORTIONS OF UTILITY SYSTEMS THAT SUPPLY ADJACENT SCHOOLS UNTIL THE NEW SYSTEMS ARE IN PLACE.
9. HAZARDOUS MATERIALS MAY BE ENCOUNTERED AT SOME AREAS OF BUILDINGS.

KEYNOTES

02.208	EXISTING RETAINING WALL TO REMAIN, PROTECT IN PLACE
02.209	EXISTING GROUTED ROCK EROSION CONTROL TO REMAIN, PROTECT IN PLACE
02.413	DEMO CURB
02.417	DEMO LANDSCAPE/TREE - SEE LANDSCAPE DWGS
02.418	DEMO CHAINLINK FENCE
02.419	DEMO STAIRS
02.420	DEMO HANDRAIL
02.421	DEMO FLAGPOLE
02.422	DEMO ASPHALT
02.423	DEMO RETAINING WALL
02.424	DEMO EXISTING TICKET BOOTH
02.425	DEMO EXISTING ASPHALT, CONCRETE TO REMAIN, PROTECT IN PLACE
02.426	DEMO EXISTING CHAINLINK FENCE, CUT POST AND CAP FLUSH WITH SURROUNDING SURFACE ELEVATIONS
02.502	SALVAGE AND RELOCATE EXISTING BENCHES

LEGEND

- EXISTING BUILDING TO BE DEMOLISHED IN ITS ENTIRETY INCLUDING FOUNDATION AND UTILITIES.
- DEMO EXISTING ASPHALT CONCRETE PAVING PER CIVIL DWG.
- REMOVE EXISTING LANDSCAPE. PREPARE SURFACE FOR NEW LANDSCAPE/ DECOMPOSED GRANITE, SEE LANDSCAPE DWG.
- EXISITING BUILDING TO REMAIN. PROTECT IN PLACE
- REMOVE EXISTING CONCRETE PAVING
- SCOPE OF WORK LINE
- REMOVE EXISTING CHAIN LINK FENCE INCLUDING FOOTING, U.N.O.
- EXISTING CHAIN LINK FENCE TO REMAIN

GHS KITCHEN & WEIGHTROOM: 06/13/2022 DSA SUBMITTAL

PROJECT No. :1-30-55
6/21/2022 3:16:46 PM

DRAWN BY: CHECKED BY:

ISSUE No.____	DATE_____	DESCRIPTION_____	REVISION No.____	DATE_____	DESCRIPTION_____
ISSUE No.____	DATE_____	DESCRIPTION_____	REVISION No.____	DATE_____	DESCRIPTION_____
ISSUE No.____	DATE_____	DESCRIPTION_____	REVISION No.____	DATE_____	DESCRIPTION_____
ISSUE No.____	DATE_____	DESCRIPTION_____	REVISION No.____	DATE_____	DESCRIPTION_____

RUHNAUCLARKE.COM
3775 TENTH STREET, RIVERSIDE CALIFORNIA 92501 (951) 684 4664 / 5751 PALMER WAY, SUITE C, CARLSBAD CALIFORNIA 92010 (760) 438 5899

GHS KITCHEN & WEIGHTROOM
GROSSMONT HIGH SCHOOL
1100 MURRAY DR, EL CAJON, CA 92020
GROSSMONT UNION HIGH SCHOOL

DEMOLITION SITE PLAN **AS-1.0**

1-30-55

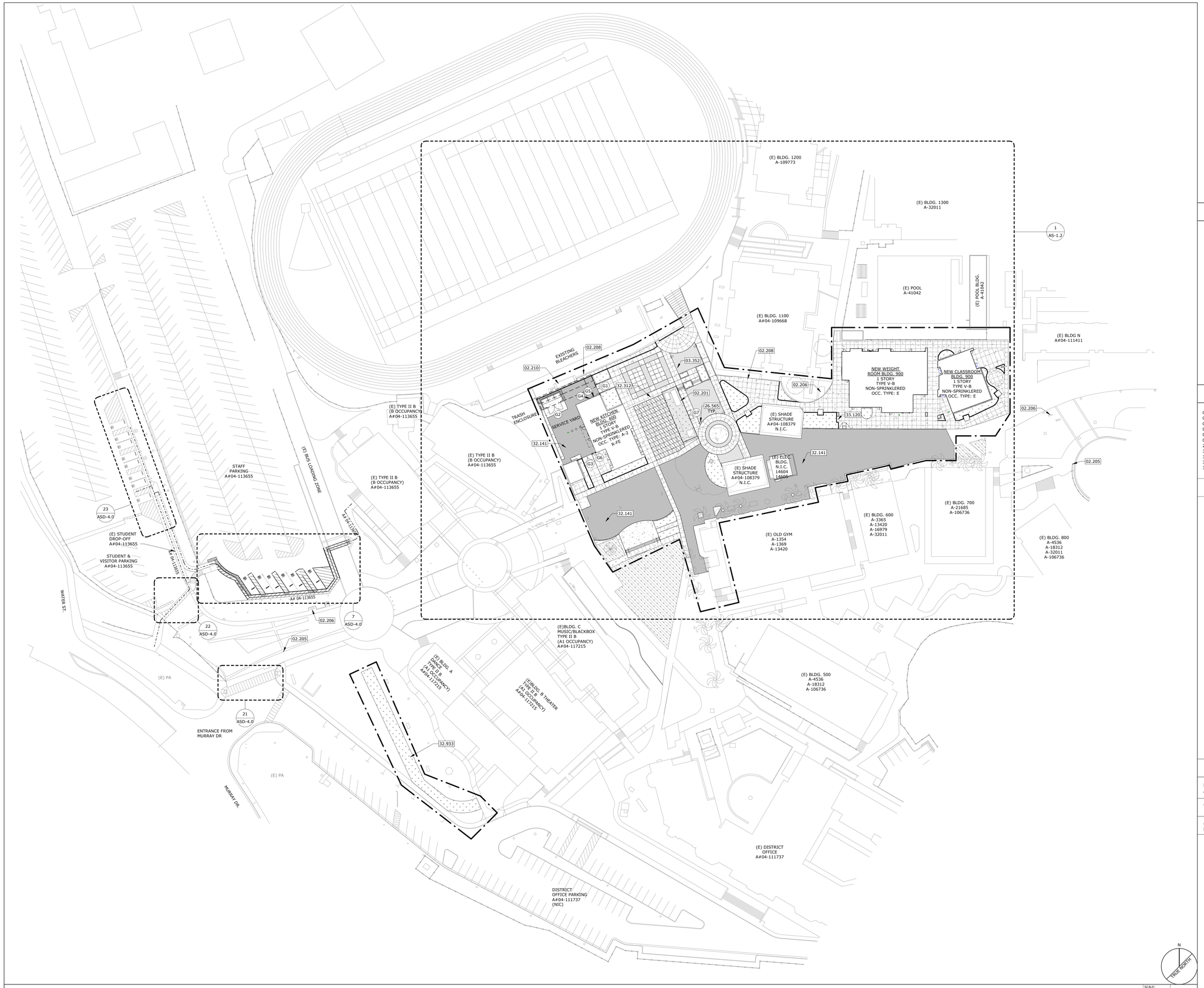

OVERALL SITE PLAN SCALE: 1" = 40'-0" REF.: 1/A1-4.0 1

STAMPS

LICENSED ARCHITECT
JAMES RUSSELL CLARKE
No. C-31040
Exp. 12/31/22
STATE OF CALIFORNIA

IDENTIFICATION STAMP
DIV. OF THE STATE ARCHITECT
APP: 04-120895 INC:
REVIEWED FOR
SS ☑ FLS ☑ ACS ☑
DATE: 06/27/2022

CONSULTANT BRANDING

RUHNAU
CLARKE
ARCHITECTS

GENERAL NOTES

1. VERIFY ALL DIMENSIONS PRIOR TO CONSTRUCTION.
2. THE CONTRACTOR IS RESPONSIBLE FOR THE DEMOLITION OF THE SITE AND IT IS THEIR SOLE RESPONSIBILITY TO VISIT THE SITE AND DETERMINE THE EXTENT OF THE DEMOLITION BASED UPON THE PROPOSED NEW WORK.
3. THE CONTRACTOR IS RESPONSIBLE FOR THE REMOVAL AND DISPOSAL OF ALL ITEMS THAT ARE TO BE DEMOLISHED (ABOVE AND BELOW GROUND). ANY HAZARDOUS MATERIALS ENCOUNTERED SHALL BE BROUGHT TO THE ATTENTION OF THE OWNER AND BE REMOVED AS REQUIRED BY STATE AND LOCAL LAWS.
4. REFER TO SPECIFICATION 01 74 19 FOR CONSTRUCTION WASTE MANAGEMENT REQUIREMENTS.
5. CONTRACTOR TO REFER TO ELECTRICAL SITE PLAN E1.1 FOR NEW ELECTRICAL SITE CONDUIT RUNS, TO TIE INTO THE EXISTING INFRASTRUCTURE. SEE GENERAL DETAILS **26 & 27/ASD-1** FOR CONCRETE AND AC PAVING PATCHING. CONTRACTOR TO REPAIR LANDSCAPE AREAS EFFECTED BY TRENCHING TO MATCH EXISTING.

KEYNOTES

02.201	EXISTING CHAINLINK FENCE TO REMAIN
02.205	EXISTING KNOX BOX AT SIGN POST
02.206	EXISTING BACKFLOW PREVENTER TO REMAIN, PROTECT IN PLASE
02.208	EXISTING RETAINING WALL TO REMAIN, PROTECT IN PLACE
02.210	EXISTING RETAINING WALL AND PLANTER BOX TO REMAIN, PROTECT IN PLACE
03.352	STAMPED CONCRETE PER SPECS
26.565	SITE LIGHTING PER E1.1
32.141	ASPHALT UNIT PAVING PER 2/C3.0
32.312	8'-0" HIGH VINYL COATED CHAIN LINK FENCE, SEE 11/ASD-1.0
32.933	LANDSCAPE BUFFER PER SHEETS LI-2 & LP-2
33.120	BACKFLOW PREVENTOR - SEE CIVIL DWGS

SITE PLAN LEGEND

- 4" THK. CONCRETE FLATWORK REINFORCED W/ #3 @18" O.C. EA. WAY AT MID DEPTH, **CONC-2** — 4 / ASD-1
- 4" CONCRETE FLATWORK W/ STAMPED TEXTURE FINISH REINFORCED W/ #3 @18" O.C. EA. WAY AT MID DEPTH, **CONC-3**
- ASPHALTIC CONCRETE PAVING PER CIVIL DWG. — 2 / C3.0
- GRASSCRETE PAVING PER DETAIL — * / ***
- LANDSCAPE/ DECOMPOSED GRANITE, SEE LANDSCAPE DWG.
- EXISTING LANDSCAPE/ DECOMPOSED GRANITE TO REMAIN, SEE LANDSCAPE DWG.
- TREE GRATES
- SCOPE OF WORK LINE
- 8'-0" VINYL COATED CHAIN LINK FENCE, U.N.O.
- LIGHT POLE PER E1.1
- ** AREA DRAIN PER C-2.0

NOTE: REFER TO COLORS, MATERIALS AND FINISHES LEGEND FOR MORE INFO. — * / JD-1.0

PARKING RATIO

PARKING AREA	STANDARD SPACES	ACCESS. AUTO	ACCESS. VAN	TOTAL SPACES
(E) STAFF PARKING LOT	180	5	1	186
(E) STUDENT & VISITOR PARKING LOT	165	7	1	173

GHS KITCHEN & WEIGHTROOM: 06/13/2022 DSA SUBMITTAL

PROJECT No. :1-30-55
6/21/2022 3:16:49 PM

DRAWN BY: CHECKED BY:
ISSUE No.____ DATE____ DESCRIPTION____
ISSUE No.____ DATE____ DESCRIPTION____
ISSUE No.____ DATE____ DESCRIPTION____
ISSUE No.____ DATE____ DESCRIPTION____
REVISION No.____ DATE____ DESCRIPTION____
REVISION No.____ DATE____ DESCRIPTION____
REVISION No.____ DATE____ DESCRIPTION____
REVISION No.____ DATE____ DESCRIPTION____

RUHNAUCLARKE.COM
3775 TENTH STREET, RIVERSIDE CALIFORNIA 92501 (951) 684 4664 / 5751 PALMER WAY, SUITE C, CARLSBAD CALIFORNIA 92010 (760) 438 5899

GHS KITCHEN & WEIGHTROOM
GROSSMONT HIGH SCHOOL
1100 MURRAY DR, EL CAJON, CA 92020
GROSSMONT UNION HIGH SCHOOL

OVERALL SITE PLAN **AS-1.1**

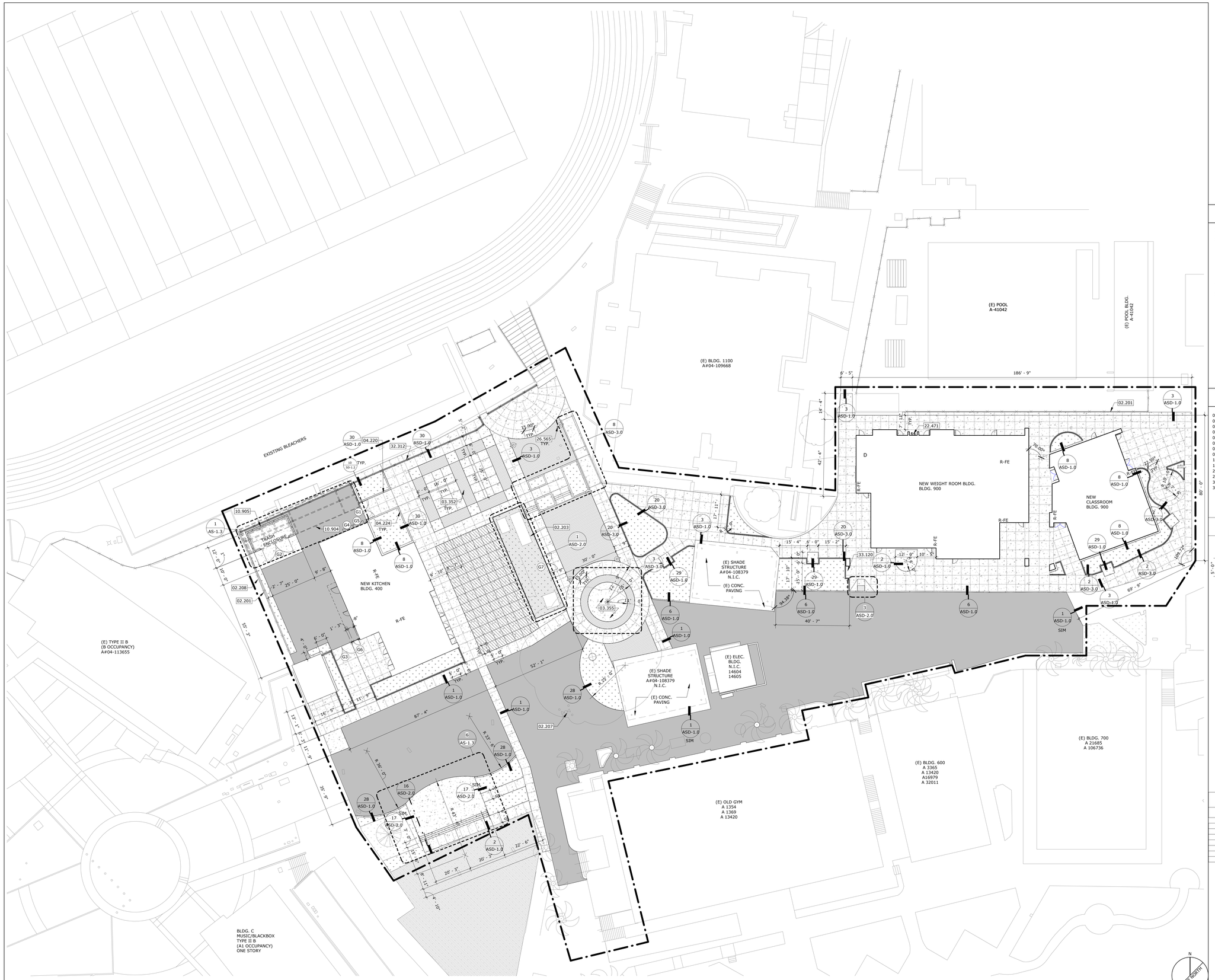

MODERNIZATION SITE PLAN | SCALE: 1" = 20'-0" | REF.: 1/A1-4.0 | 1

STAMPS

LICENSED ARCHITECT
RUHNAU CLARKE
No. C-31040
Exp. 12/31/22
STATE OF CALIFORNIA

IDENTIFICATION STAMP
DIV. OF THE STATE ARCHITECT
APP: 04-120895 INC:
REVIEWED FOR
SS ☑ FLS ☑ ACS ☑
DATE: 06/27/2022
DSA
AS
File No.

CONSULTANT BRANDING

RUHNAU
CLARKE
ARCHITECTS

GENERAL NOTES

1. VERIFY ALL DIMENSIONS PRIOR TO CONSTRUCTION.
2. THE CONTRACTOR IS RESPONSIBLE FOR THE DEMOLITION OF THE SITE AND IT IS THEIR SOLE RESPONSIBILITY TO VISIT THE SITE AND DETERMINE THE EXTENT OF THE DEMOLITION BASED UPON THE PROPOSED NEW WORK.
3. THE CONTRACTOR IS RESPONSIBLE FOR THE REMOVAL AND DISPOSAL OF ALL ITEMS THAT ARE TO BE DEMOLISHED (ABOVE AND BELOW GROUND). ANY HAZARDOUS MATERIALS ENCOUNTERED SHALL BE BROUGHT TO THE ATTENTION OF THE OWNER AND BE REMOVED AS REQUIRED BY STATE AND LOCAL LAWS.
4. REFER TO SPECIFICATION 01 74 19 FOR CONSTRUCTION WASTE MANAGEMENT REQUIREMENTS.
5. CONTRACTOR TO REFER TO ELECTRICAL SITE PLAN E1.1 FOR NEW ELECTRICAL SITE CONDUIT RUNS, TO TIE INTO THE EXISTING INFRASTRUCTURE. SEE GENERAL DETAILS **26 & 27/ASD-1** FOR CONCRETE AND AC PAVING PATCHING. CONTRACTOR TO REPAIR LANDSCAPE AREAS EFFECTED BY TRENCHING TO MATCH EXISTING.

KEYNOTES

02.201	EXISTING CHAINLINK FENCE TO REMAIN
02.203	EXISTING ELECTRICAL EQUIPMENT TO REMAIN
02.207	EXISTING FIRE HYDRANT TO REMAIN, PROTECT IN PLACE
02.208	EXISTING RETAINING WALL TO REMAIN, PROTECT IN PLACE
03.352	STAMPED CONCRETE PER SPECS
03.355	SCHOOL LOGO PAVING AT THIS LOCATION PER DETAIL 3/ASD-3.0
04.220	CONCRETE MASONRY UNIT SEAT 30/ASD-1.0
04.224	CONCRETE MASONRY UNIT SEAT WALL
10.904	CANOPY SHADE STRUCTURE, REFER TO STRUCTURAL SHEET S3-1.1
10.905	TRASH ENCLOSURE, SEE SHEET AS-1.3
22.471	HI-LO DRINKING FOUNTAIN PER PLUMBING FLOOR PLAN 2/P1-2.2 (BLDG 900) & DETAILS 21 & 22/AD-1.0
26.565	SITE LIGHTING PER E1.1
32.312	8'-0" HIGH VINYL COATED CHAIN LINK FENCE, SEE 11/ASD-1.0
33.120	BACKFLOW PREVENTOR - SEE CIVIL DWGS

LEGEND

- 4" THK. CONCRETE FLATWORK REINFORCED W/ #4 @18" O.C. EA. WAY AT MID DEPTH, **CONC-2** — 1/ASD-1.0, 2/ASD-1.0, 4/ASD-1.0
- 4" CONCRETE FLATWORK W/ STAMPED TEXTURE FINISH REINFORCED W/ #4 @18" O.C. EA. WAY AT MID DEPTH, **CONC-3**
- ASPHALTIC CONCRETE PAVING PER CIVIL DWG. — 1/ASD-1.0, 7/ASD-1.0
- 4" CONCRETE FLATWORK W/ TEXTURE FINISH REINFORCED W/ #4 @18" O.C. EA. WAY AT MID DEPTH, **CONC-2** — 1/ASD-1.0, 2/ASD-1.0, 4/ASD-1.0
- LANDSCAPE/ DECOMPOSED GRANITE, SEE LANDSCAPE DWG. — 1/LP-1
- TREE GRATES
- SCOPE OF WORK LINE
- 8'-0" VINYL COATED CHAIN LINK FENCE, U.N.O.
- LIGHT POLE PER ELECTRICAL DETAIL
- AREA DRAIN PER CIVIL DWG. — -/C-2.0

NOTE: REFER TO COLORS, MATERIALS AND FINISHES LEGEND FOR MORE INFO. — -/ID-1.0

GATE SCHEDULE

NO.	GATE SIZE	MATERIAL	HARDWARE SET	NOTES	ELEV. DETAIL
G1	PR 5' - 0" X 8' - 0"	CLF.	19	1,3	16/ASD-1
G2	PR 7'-10" X 8' - 0"	STL.	19	3	10/ASD-1
G3	PR 6' - 0" X 8' - 0"	CLF.	19	1,3	16/ASD-1
G4	PR 6'-0" X 8' - 4"	CLF.	19		16/ASD-1
G5	PR 6'-0" X 8' - 4"	CLF.	19		16/ASD-1
G6	3'-0" x 8'-0"	CLF.	22	2	20/ASD-1
G7	PR 4'-3" X 8' - 0"	STL.	19	3	10/ASD-1

GATE NOTES
1. PROVIDE PADLOCK & KNOX BOX BY KNOX BOX COMPANY PER HEARTLAND FIRE AND RESCUE REQUIREMENTS. SURFACE MOUNT ON ADJACENT FENCE.
2. PROVIDE PANIC HARDWARE.
3. PROVIDE HARDWARE PER SANITAITON DEPARTMENT REQUIREMENTS.

GATE LEGEND
STL. STEEL

GHS KITCHEN & WEIGHTROOM: 06/13/2022 DSA SUBMITTAL

PROJECT No. :1-30-55
6/21/2022 3:16:53 PM

DRAWN BY: CHECKED BY:

ISSUE No.	DATE	DESCRIPTION
ISSUE No.	DATE	DESCRIPTION
ISSUE No.	DATE	DESCRIPTION
ISSUE No.	DATE	DESCRIPTION

REVISION No.	DATE	DESCRIPTION
REVISION No.	DATE	DESCRIPTION
REVISION No.	DATE	DESCRIPTION
REVISION No.	DATE	DESCRIPTION

RUHNAUCLARKE.COM
3775 TENTH STREET, RIVERSIDE CALIFORNIA 92501 (951) 684-4664 / 5751 PALMER WAY, SUITE C, CARLSBAD CALIFORNIA 92010 (760) 438 5899

GHS KITCHEN & WEIGHTROOM
GROSSMONT HIGH SCHOOL
1100 MURRAY DR, EL CAJON, CA 92020
GROSSMONT UNION HIGH SCHOOL

MODERNIZATION SITE PLAN

AS-1.2

1-30-55

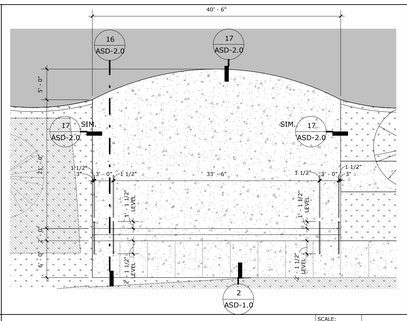

ENLARGED STAGE PLAN SCALE: 1" = 10'-0" REF.: 1/AS-1.2 6

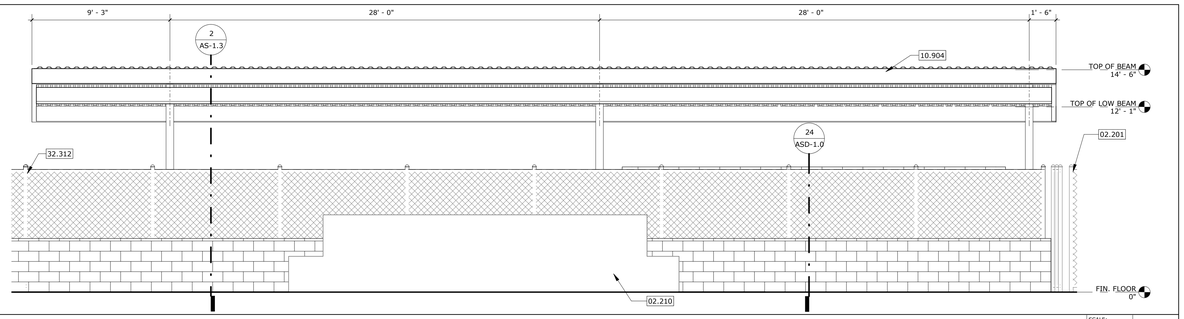

TYP. W TRASH ENCLOSURE ELEV. SCALE: 1/4" = 1'-0" REF.: 1/AS-1.3 5

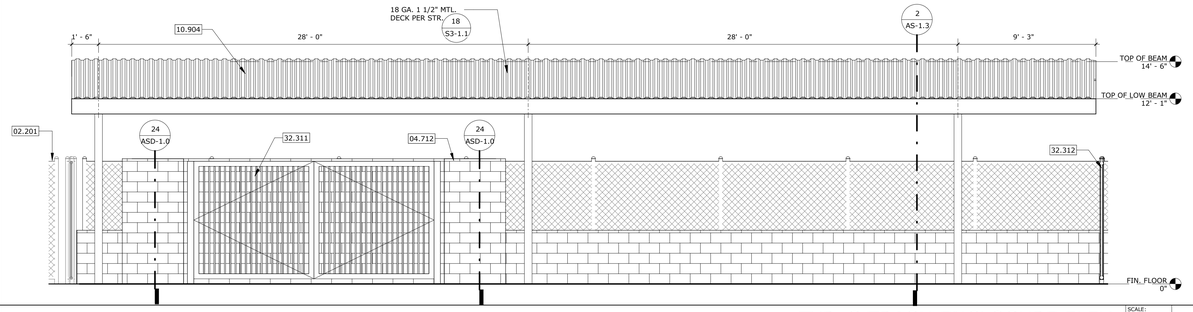

TYP. S TRASH ENCLOSURE ELEV. SCALE: 1/4" = 1'-0" REF.: 1/A2-3.0 4

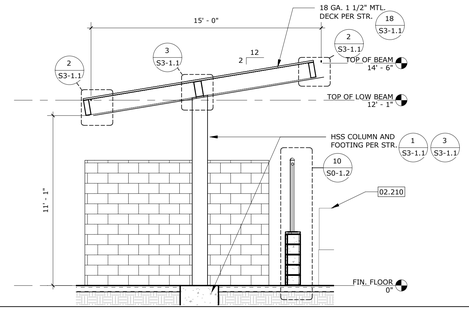

SHADE CANOPY SECTION SCALE: 1/4" = 1'-0" REF.: 1/AS-1.3 2

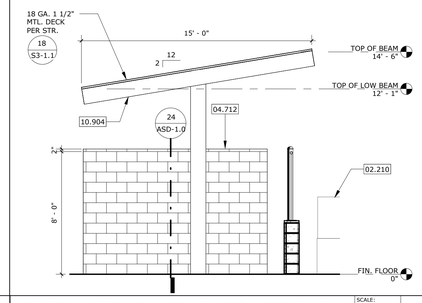

TYP. N TRASH ENCLOSURE ELEV. SCALE: 1/4" = 1'-0" REF.: 2/A2-1.0 3

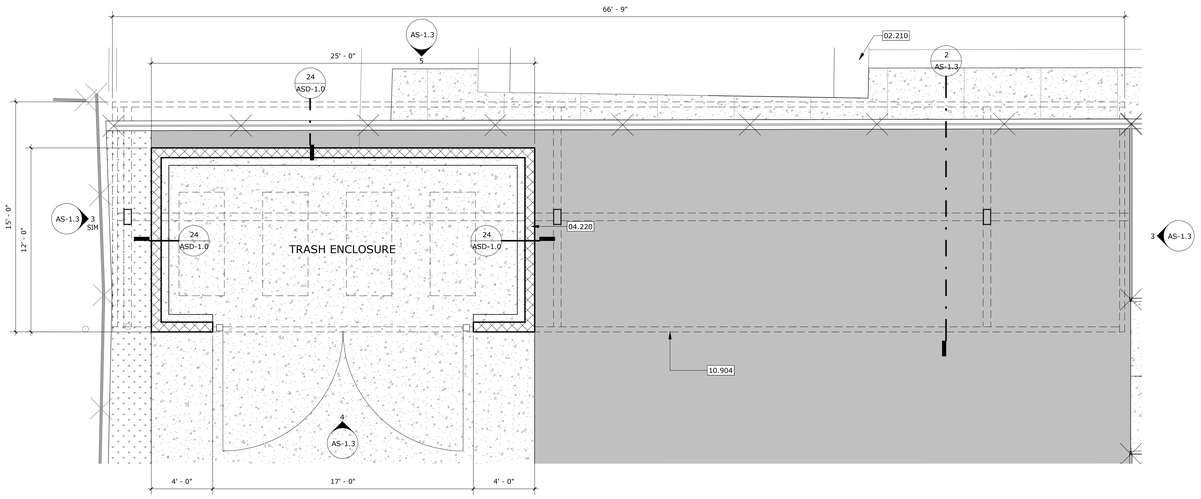

OVERALL SITE MODERNIZATION - TRASH ENCLOSURE SCALE: 1/4" = 1'-0" REF.: 1/AS-1.2 1

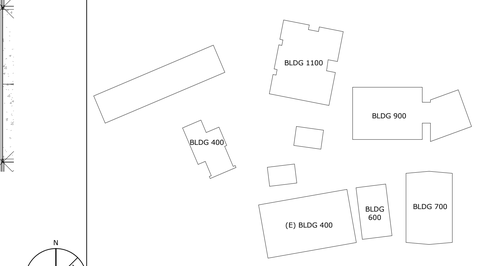

KEY PLAN NTS

STAMPS

LICENSED ARCHITECT
RUHNAU CLARKE
No. C-31040
Exp. 12/31/22
STATE OF CALIFORNIA

IDENTIFICATION STAMP
DIV. OF THE STATE ARCHITECT
APP: 04-120895 INC:
REVIEWED FOR
SS ☑ FLS ☑ ACS ☑
DATE: 06/27/2022

AGENCY
File No.

CONSULTANT BRANDING

RUHNAU
CLARKE
ARCHITECTS

KEYNOTES

02.201	EXISTING CHAINLINK FENCE TO REMAIN
02.210	EXISTING RETAINING WALL AND PLANTER BOX TO REMAIN, PROTECT IN PLACE
04.220	CONCRETE MASONRY UNIT SEE 30/ASD-1.0
04.712	8'-2" HIGH, 8"X8"X16" CMU WALL - STACK BOND WITH HOR.RAKE JOINT AND FLUSH VERTICAL JOINTS WITH MASONARY CAP. REF DTL 24/ASD-1.0
10.904	CANOPY SHADE STRUCTURE, REFER TO STRUCTURAL SHEET S3-1.1
32.311	CHAIN LINK GATE PER SCHEDULE, REFER TO SHEET AS0.2
32.312	8'-0" HIGH VINYL COATED CHAIN LINK FENCE, SEE 11/ASD-1.0

GHS KITCHEN & WEIGHTROOM: 06/13/2022 DSA SUBMITTAL

PROJECT No. :1-30-55
6/21/2022 3:16:55 PM

DRAWN BY: CHECKED BY:

ISSUE No.____	DATE_____	DESCRIPTION_____	REVISION No.____	DATE_____	DESCRIPTION_____
ISSUE No.____	DATE_____	DESCRIPTION_____	REVISION No.____	DATE_____	DESCRIPTION_____
ISSUE No.____	DATE_____	DESCRIPTION_____	REVISION No.____	DATE_____	DESCRIPTION_____
ISSUE No.____	DATE_____	DESCRIPTION_____	REVISION No.____	DATE_____	DESCRIPTION_____

RUHNAUCLARKE.COM
3775 TENTH STREET, RIVERSIDE CALIFORNIA 92501 (951) 684 4664 / 5751 PALMER WAY, SUITE C, CARLSBAD CALIFORNIA 92010 (760) 438 5899

GHS KITCHEN & WEIGHTROOM
GROSSMONT HIGH SCHOOL
1100 MURRAY DR, EL CAJON, CA 92020
GROSSMONT UNION HIGH SCHOOL

ENLARGED SITE PLAN **AS-1.3**

1-30-55

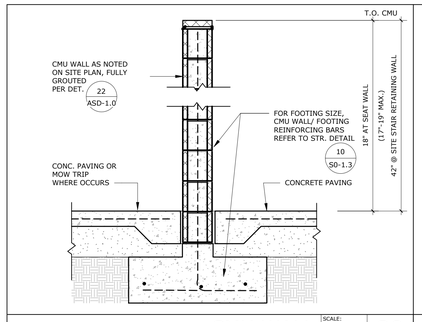

CMU WALL SCALE: 3/4" = 1'-0" REF.: 2/A2-4.0 30

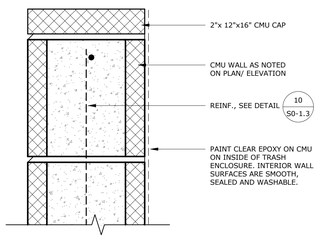

CMU WALL CAP SCALE: 3" = 1'-0" REF.: / 25

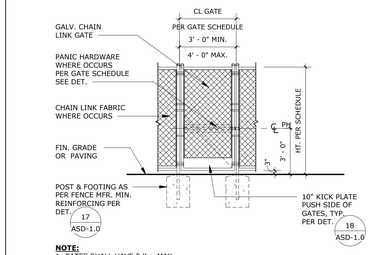

CHAIN LINK PEDESTRIAN GATE SCALE: 1/4" = 1'-0" REF.: / 20

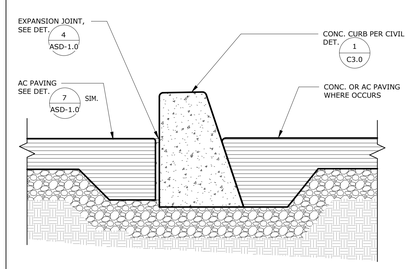

CONCRETE CURB SCALE: 1 1/2" = 1'-0" REF.: / 15

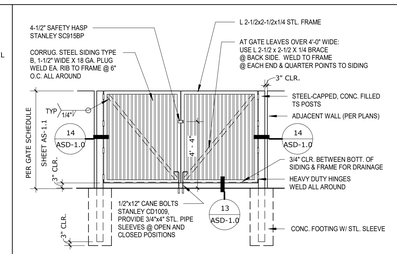

EXTERIOR ELEVATION

NOTE: **NOT P.O.T. GATES**
1. ALL STEEL TO BE HOT DIP GALVANIZED.
2. POST & FOOTING PER

(PR) MTL. SERVICE GATE ELEV. SCALE: 1/4" = 1'-0" REF.: / 10

STAMPS

LICENSED ARCHITECT — REGISTERED OWNER — No. C-31940 — Exp. 12/31/22 — STATE OF CALIFORNIA

IDENTIFICATION STAMP
DIV. OF THE STATE ARCHITECT
APP: 04-120895 INC:
REVIEWED FOR
SS ☑ FLS ☑ ACS ☑
DATE: 06/27/2022
AGENCY FILE No.

CONSULTANT BRANDING

RUHNAU CLARKE ARCHITECTS

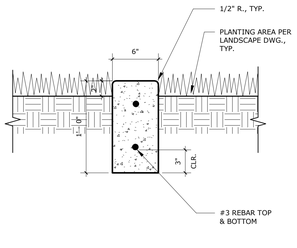

CONCRETE STRIP @ P.A. SCALE: 1 1/2" = 1'-0" REF.: 1/AS-1.2 29

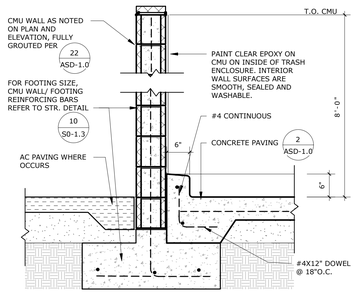

TRASH ENCLOSURE DETAIL SCALE: 3/4" = 1'-0" REF.: 1/AS-1.1 24

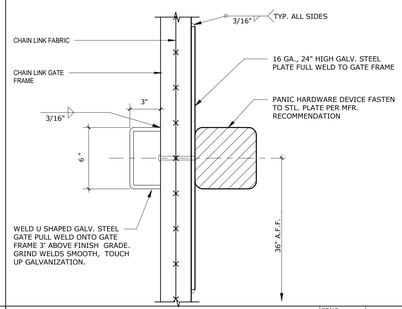

CHAIN LINK GATE P.H. SCALE: 3" = 1'-0" REF.: / 19

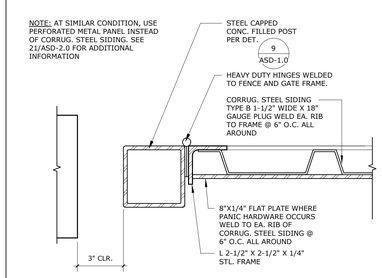

SERVICE GATE HINGE POST SCALE: 3" = 1'-0" REF.: 10/ASD-1.0 14

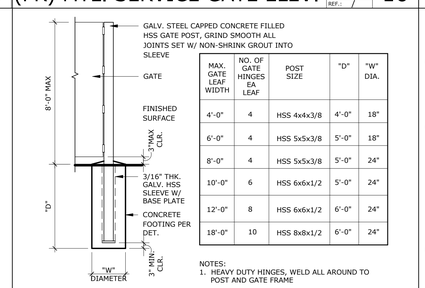

MAX. GATE LEAF WIDTH	NO. OF GATE HINGES EA. LEAF	POST SIZE	"D"	"W" DIA.
4'-0"	4	HSS 4x4x3/8	4'-0"	18"
6'-0"	4	HSS 5x5x3/8	5'-0"	18"
8'-0"	4	HSS 5x5x3/8	5'-0"	24"
10'-0"	6	HSS 6x6x1/2	5'-0"	24"
12'-0"	8	HSS 6x6x1/2	6'-0"	24"
18'-0"	10	HSS 8x8x1/2	6'-0"	24"

NOTES:
1. HEAVY DUTY HINGES, WELD ALL AROUND TO POST AND GATE FRAME
2. POST SLEEVE, 3/4" MIN. CLEAR AROUND POST
3. FILL POSTS WITH CONCRETE

GATE POST SCALE: 1/4" = 1'-0" REF.: 13/ASD-2.0 9

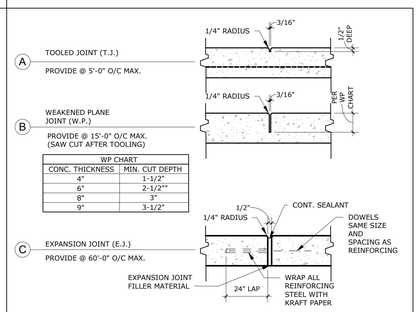

WP CHART	
CONC. THICKNESS	MIN. CUT DEPTH
4"	1-1/2"
6"	2-1/2"*
8"	3"
9"	3-1/2"

TYP.CONC. JOINT DETAILS SCALE: 1 1/2" = 1'-0" REF.: / 4

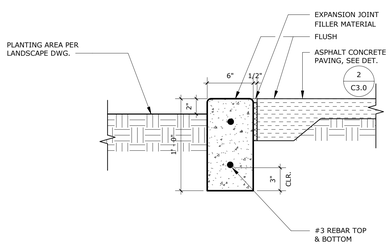

PLANT BOX-FLUSH SCALE: 1 1/2" = 1'-0" REF.: 1/AS-1.2 28

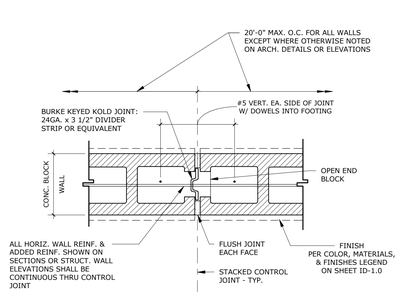

MASONRY CONTROL JOINT SCALE: 1 1/2" = 1'-0" REF.: / 23

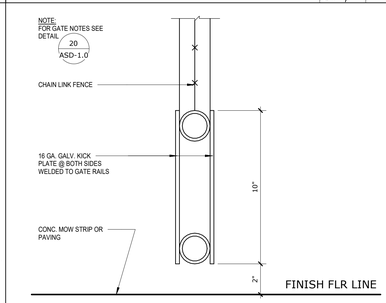

CHAIN LINK GATE KICK PLATE SCALE: 3" = 1'-0" REF.: / 18

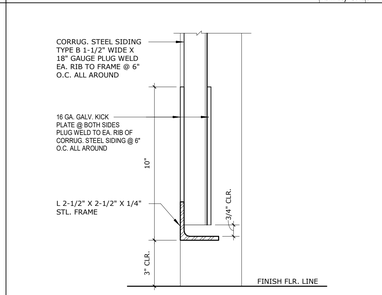

SERVICE GATE KICK PLATE SCALE: 3" = 1'-0" REF.: 10/ASD-1.0 13

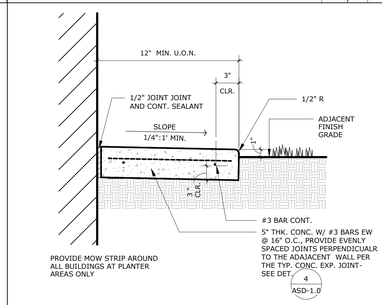

TYP. BUILDING MOW STRIP SCALE: 1 1/2" = 1'-0" REF.: 1/AS-1.2 8

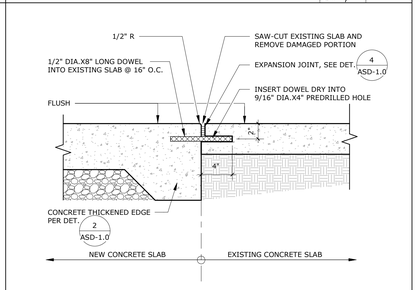

CONC. PAVING JOINING SCALE: 1 1/2" = 1'-0" REF.: 1/AS-1.2 3

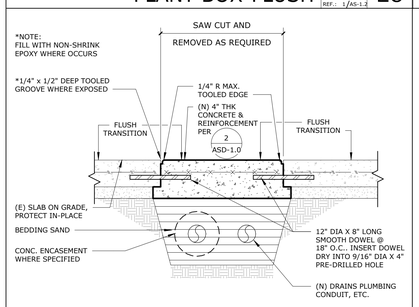

CONCRETE PAVING PATCH SCALE: 1 1/2" = 1'-0" REF.: / 27

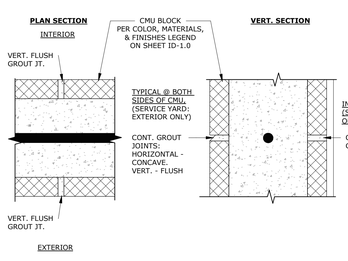

TYP. CMU GROUT JOINT SCALE: 3" = 1'-0" REF.: / 22

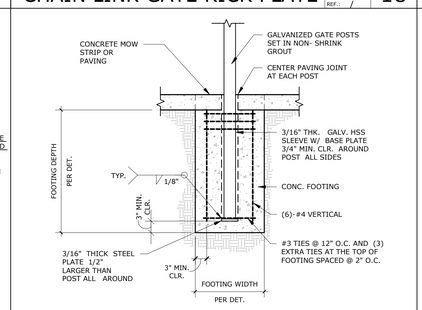

CHAIN LINK GATE POST FTG SCALE: 3/4" = 1'-0" REF.: / 17

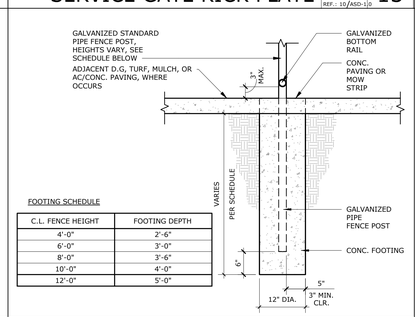

FOOTING SCHEDULE

C.L. FENCE HEIGHT	FOOTING DEPTH
4'-0"	2'-6"
6'-0"	3'-0"
8'-0"	3'-6"
10'-0"	4'-0"
12'-0"	5'-0"

CL FENCE POST FENCING SCALE: 3/4" = 1'-0" REF.: / 12

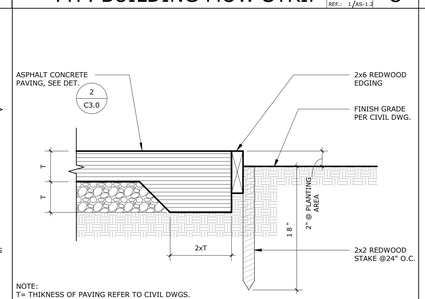

AC PAVING EDGE @ PA SCALE: 1 1/2" = 1'-0" REF.: / 7

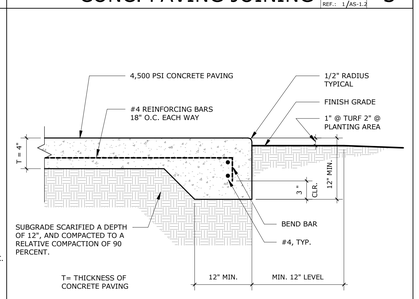

CONC. PAVING EDGE SCALE: 1 1/2" = 1'-0" REF.: 1/AS-1.2 2

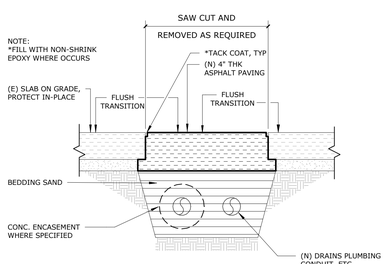

ASPHALT PAVING PATCH SCALE: 1 1/2" = 1'-0" REF.: / 26

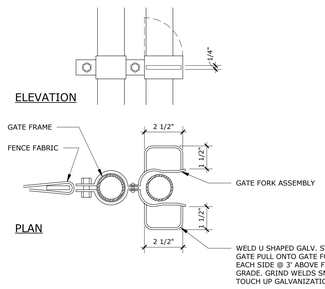

FORK LATCH PULLS SCALE: 3" = 1'-0" REF.: / 21

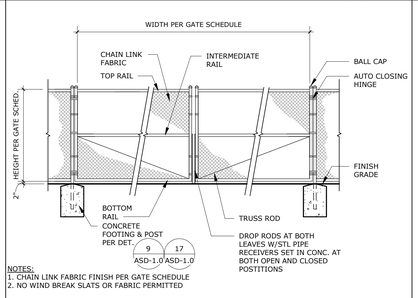

CHAIN LINK SERVICE GATE SCALE: 1/4" = 1'-0" REF.: / 16

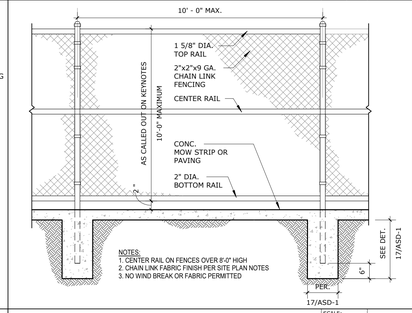

CHAIN LINK FENCE ELEV. SCALE: 1/2" = 1'-0" REF.: / 11

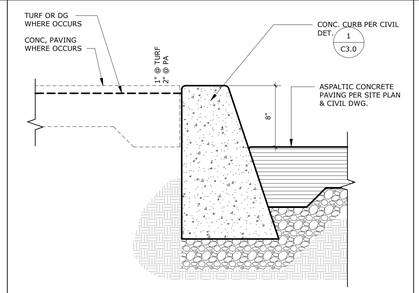

CONC. CURB @ AC SCALE: 1 1/2" = 1'-0" REF.: 1/AS-1.2 6

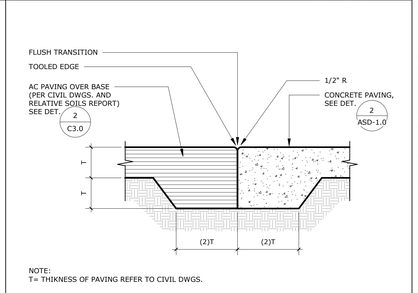

CONC. PAVING @ AC SCALE: 1 1/2" = 1'-0" REF.: 1/AS-1.2 1

GHS KITCHEN & WEIGHTROOM: 06/13/2022 DSA SUBMITTAL

PROJECT No. :1-30-55
6/21/2022 3:16:56 PM

DRAWN BY: CHECKED BY:

ISSUE No.____	DATE_____	DESCRIPTION_____	REVISION No.____	DATE_____	DESCRIPTION_____
ISSUE No.____	DATE_____	DESCRIPTION_____	REVISION No.____	DATE_____	DESCRIPTION_____
ISSUE No.____	DATE_____	DESCRIPTION_____	REVISION No.____	DATE_____	DESCRIPTION_____
ISSUE No.____	DATE_____	DESCRIPTION_____	REVISION No.____	DATE_____	DESCRIPTION_____

RUHNAUCLARKE.COM
3775 TENTH STREET, RIVERSIDE CALIFORNIA 92501 (951) 684 4664 / 5751 PALMER WAY, SUITE C, CARLSBAD CALIFORNIA 92010 (760) 438 5899

GHS KITCHEN & WEIGHTROOM
GROSSMONT HIGH SCHOOL
1100 MURRAY DR, EL CAJON, CA 92020
GROSSMONT UNION HIGH SCHOOL

SITE DETAILS

ASD-1.0

1-30-55

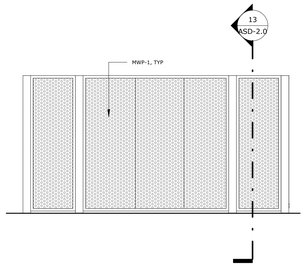

ELECTRICAL YARD - NORTH | SCALE: 1/4" = 1'-0" | REF.: 1/ASD-2.0 | 30

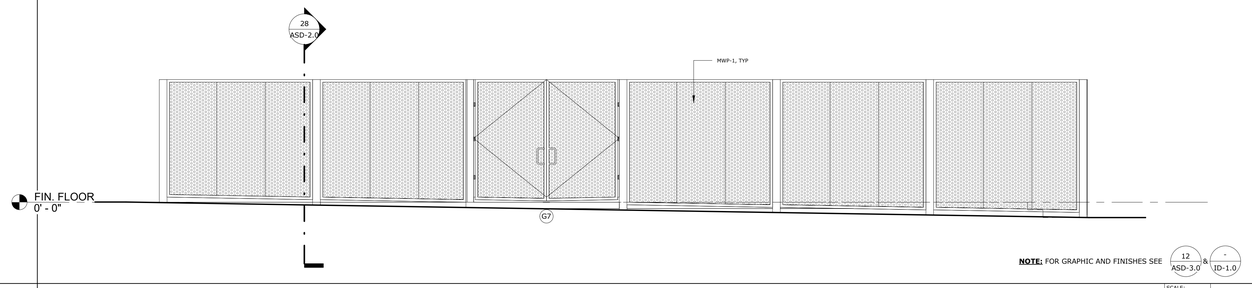

ELECTRICAL YARD - EAST | SCALE: 1/4" = 1'-0" | REF.: 1/ASD-2.0 | 15

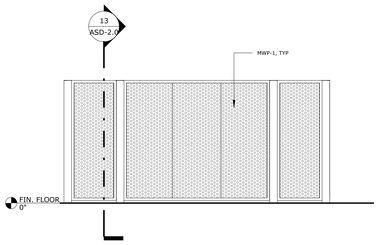

ELECTRICAL YARD - SOUTH | SCALE: 1/4" = 1'-0" | REF.: 1/ASD-2.0 | 29

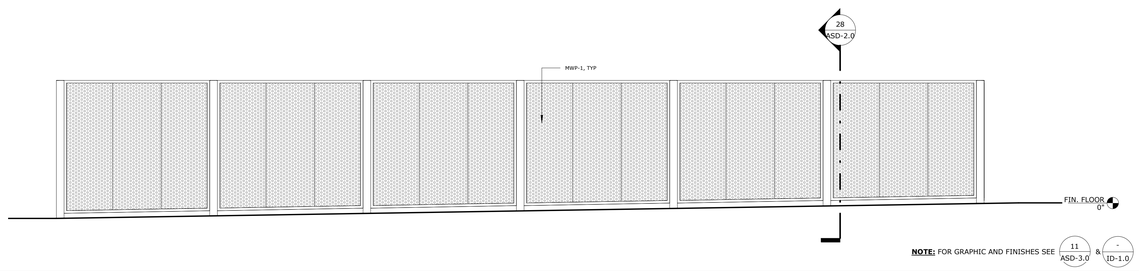

ELECTRICAL YARD - WEST | SCALE: 1/4" = 1'-0" | REF.: 1/ASD-2.0 | 14

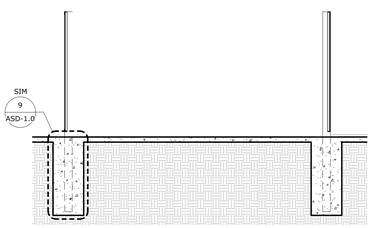

ELECTRICAL YARD SECTION 1 | SCALE: 1/4" = 1'-0" | REF.: 1/ASD-2.0 | 28

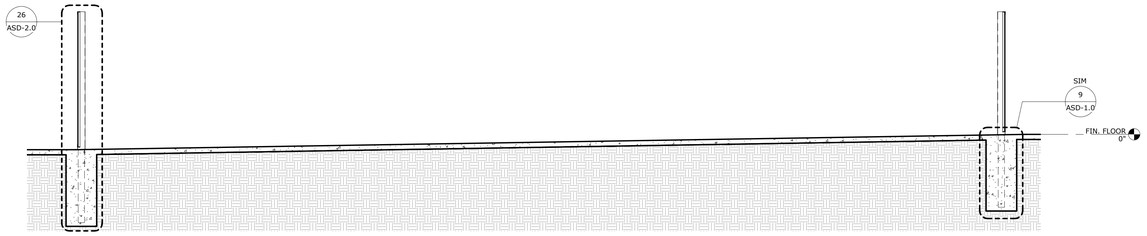

ELECTRICAL YARD SECTION 2 | SCALE: 1/4" = 1'-0" | REF.: 1/ASD-2.0 | 13

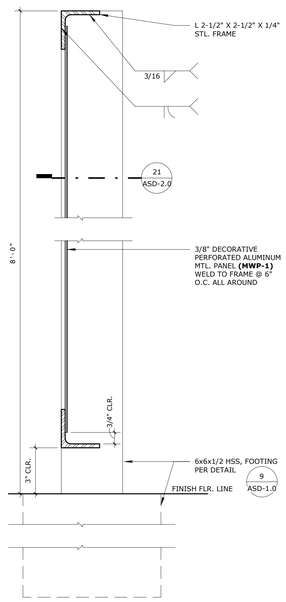

METAL FENCE SECTION 1 | SCALE: 1/4" = 1'-0" | REF.: 13/ASD-2.0 | 26

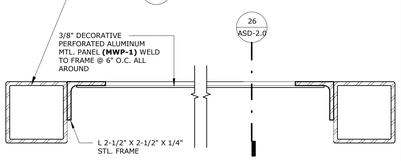

METAL FENCE SECTION 2 | SCALE: 3" = 1'-0" | REF.: 26/ASD-2.0 | 21

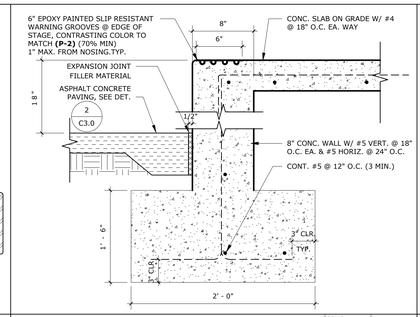

STAGE EDGE | SCALE: 1 1/2" = 1'-0" | REF.: 1/AS-1.2 | 17

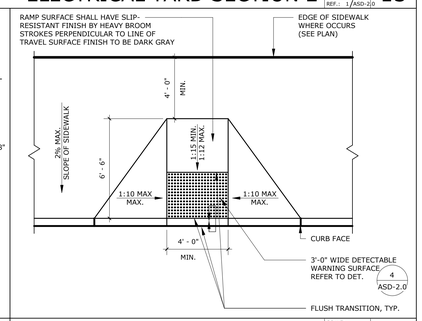

ACCESSIBLE CURB CUT RAMP | SCALE: 1/4" = 1'-0" | REF.: 1/AS-1.2 | 3

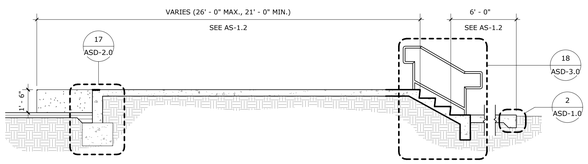

SECTION @ STAGE | SCALE: 1/4" = 1'-0" | REF.: 1/AS-1.2 | 16

NOTES:
1. DETECTABLE WARNING TILE SHALL FORM CONTINUOUS SURFACE OF CROSSWALK
2. COLOR YELLOW TO MATCH FEDERAL COLOR NO. 33538, PER STANDARD NO. 595C
3. PROVIDE 5 YEAR PRODUCT WARRANTY PER DSA BULLETIN ISSUED 10/31/2002, REVISED 04/09/2008

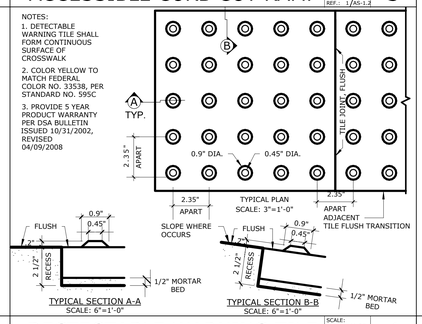

DECTECTABLE WARNING TILE | SCALE: 3" = 1'-0" | REF.: / | 4

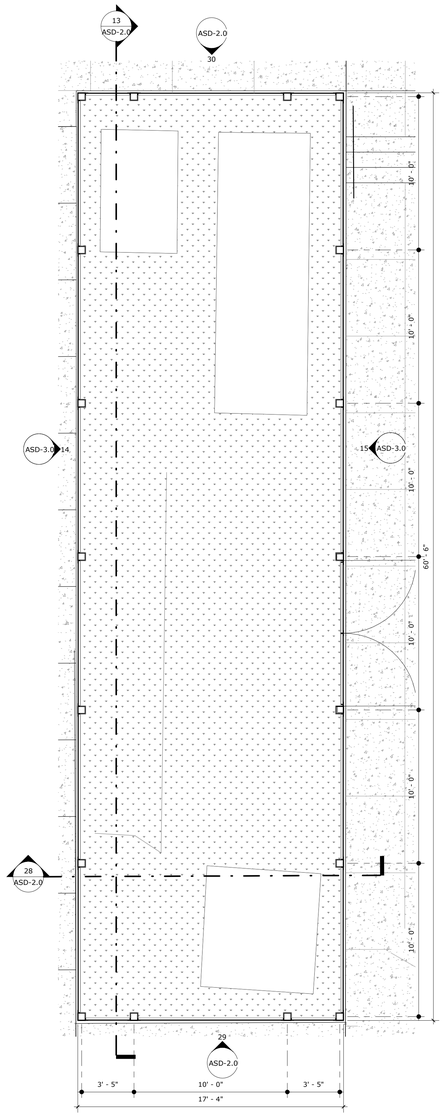

ENLARGED SITE PLAN - ELECTRICAL YARD | SCALE: 1/4" = 1'-0" | REF.: 1/AS-1.2 | 1

N
TRUE NORTH

GHS KITCHEN & WEIGHTROOM: 06/13/2022 DSA SUBMITTAL

STAMPS

LICENSED ARCHITECT
RUSSELL CLARKE
No. C-31040
Exp. 12/31/22
STATE OF CALIFORNIA

IDENTIFICATION STAMP
DIV. OF THE STATE ARCHITECT
APP: 04-120895 INC:
REVIEWED FOR
SS ☑ FLS ☑ ACS ☑
DATE: 06/27/2022
AGENCY
File No.

CONSULTANT BRANDING

RUHNAU
CLARKE
ARCHITECTS

PROJECT No. :1-30-55
6/21/2022 3:16:58 PM

DRAWN BY: CHECKED BY:

ISSUE No.	DATE	DESCRIPTION	REVISION No.	DATE	DESCRIPTION
ISSUE No.	DATE	DESCRIPTION	REVISION No.	DATE	DESCRIPTION
ISSUE No.	DATE	DESCRIPTION	REVISION No.	DATE	DESCRIPTION
ISSUE No.	DATE	DESCRIPTION	REVISION No.	DATE	DESCRIPTION

RUHNAUCLARKE.COM
3775 TENTH STREET, RIVERSIDE CALIFORNIA 92501 (951) 684 4664 / 5751 PALMER WAY, SUITE C, CARLSBAD CALIFORNIA 92010 (760) 438 5899

GHS KITCHEN & WEIGHTROOM
GROSSMONT HIGH SCHOOL
1100 MURRAY DR, EL CAJON, CA 92020
GROSSMONT UNION HIGH SCHOOL

SITE DETAILS

ASD-2.0

1-30-55

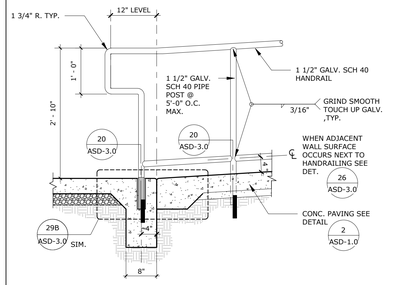

HANDRAIL END @ RAMP — SCALE: 3/4" = 1'-0" — REF.: 19/ASD-3.0 — 30

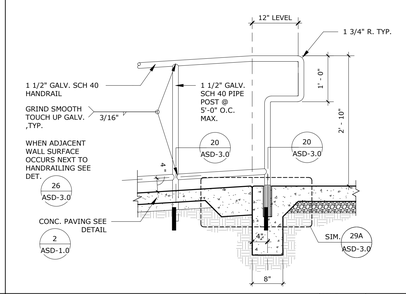

HANDRAIL END @TOP RAMP — SCALE: 3/4" = 1'-0" — REF.: 19/ASD-3.0 — 25

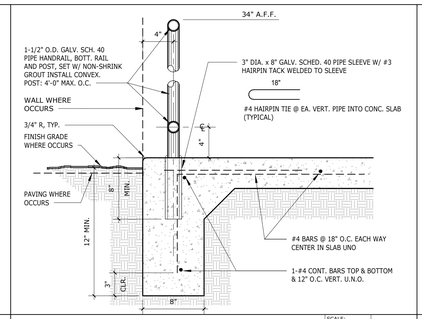

HANDRAIL POST — SCALE: 1 1/2" = 1'-0" — REF.: 1/AS-1.2 — 20

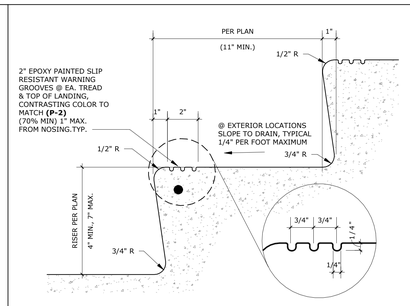

STAIRS NOSING — SCALE: 3" = 1'-0" — REF.: 18/ASD-3.0 — 15

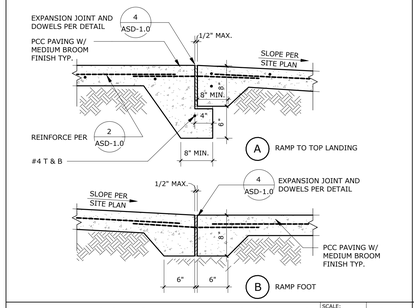

TYP. CONC. RAMP FOOTING — SCALE: 1" = 1'-0" — REF.: / — 29

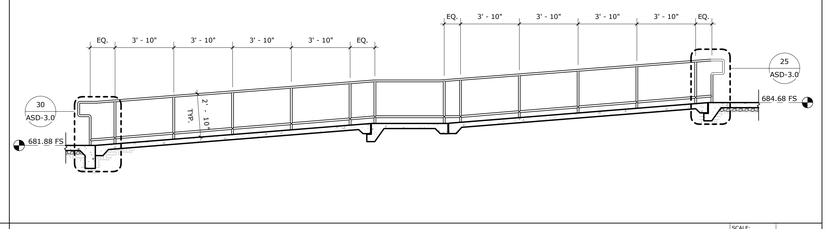

SECTION @ CONC. RAMP — SCALE: 1/4" = 1'-0" — REF.: 8/ASD-3.0 — 19

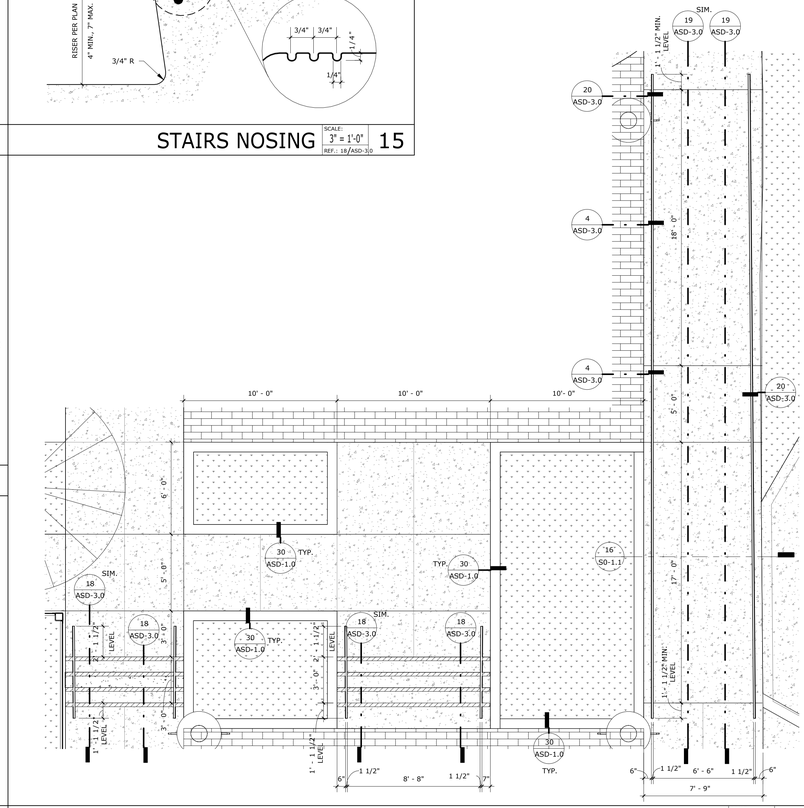

SITE STAIR & RAMP ENLARGED PLAN — SCALE: 1/4" = 1'-0" — REF.: 1/AS-1.2 — 8

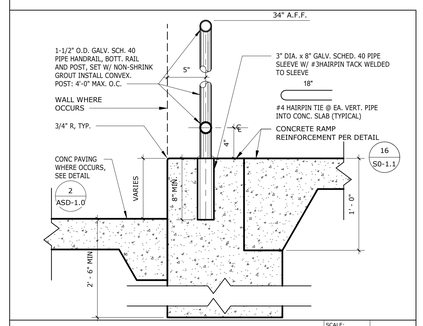

HANDRAIL @ RAMP — SCALE: 1 1/2" = 1'-0" — REF.: 8/ASD-3.0 — 4

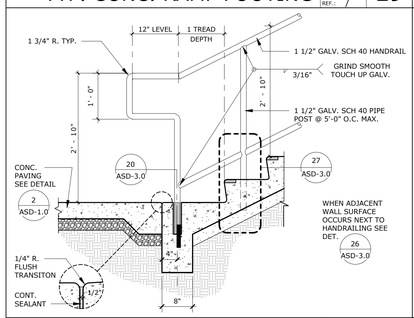

HANDRAIL END BTTM. STAIRS — SCALE: 3/4" = 1'-0" — REF.: 18/ASD-3.0 — 28

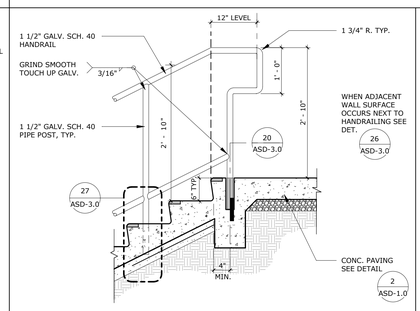

HANDRAIL END TOP STAIRS — SCALE: 3/4" = 1'-0" — REF.: 18/ASD-3.0 — 23

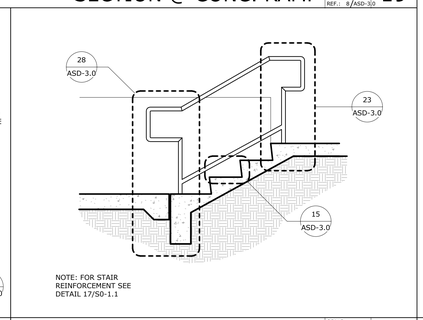

SECTION @ CONC. STAIR — SCALE: 1/2" = 1'-0" — REF.: 16/ASD-2.0 — 18

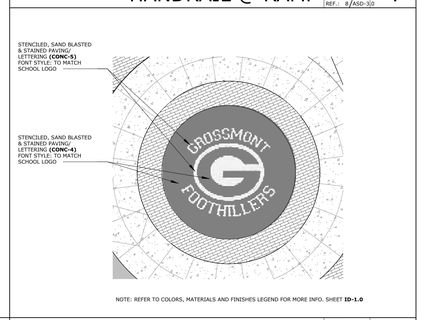

SCHOOL LOGO PAVING — SCALE: 1" = 10'-0" — REF.: 1/AS-1.2 — 3

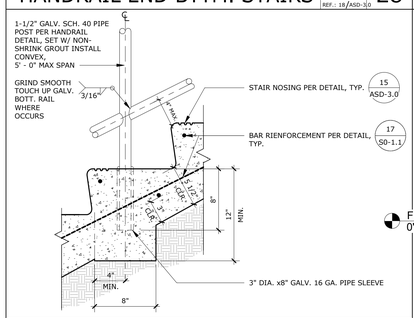

H.R. FTG. @ STAIR TREAD — SCALE: 1 1/2" = 1'-0" — REF.: 23/ASD-3.0 — 27

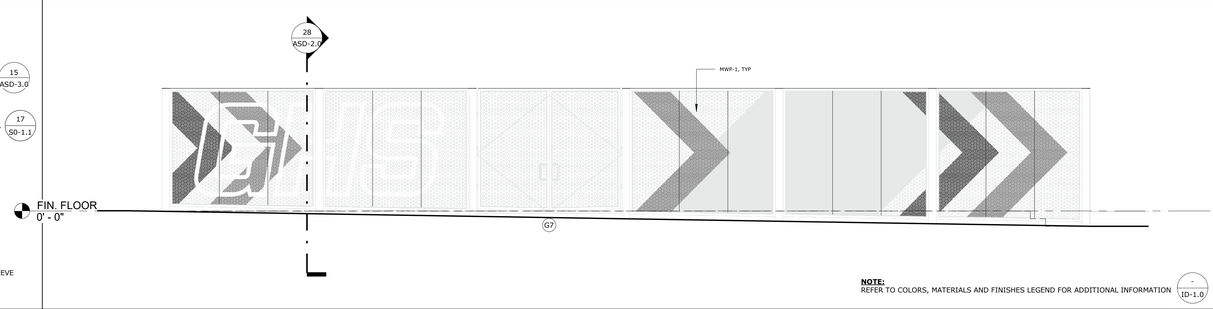

ELECTRICAL YARD FINISH ELEVATION - EAST — SCALE: 1/4" = 1'-0" — REF.: / — 12

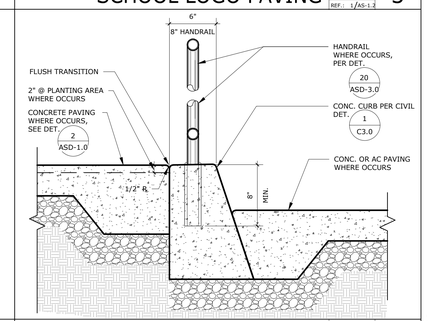

CONCRETE CURB — SCALE: 1 1/2" = 1'-0" — REF.: 1/AS-1.2 — 2

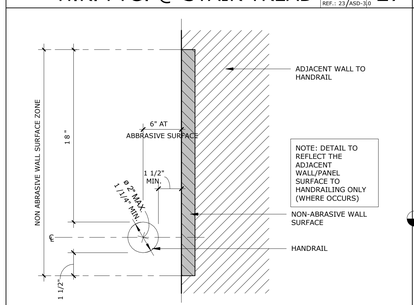

WALL SURFACE @ H.R. — SCALE: 3" = 1'-0" — REF.: / — 26

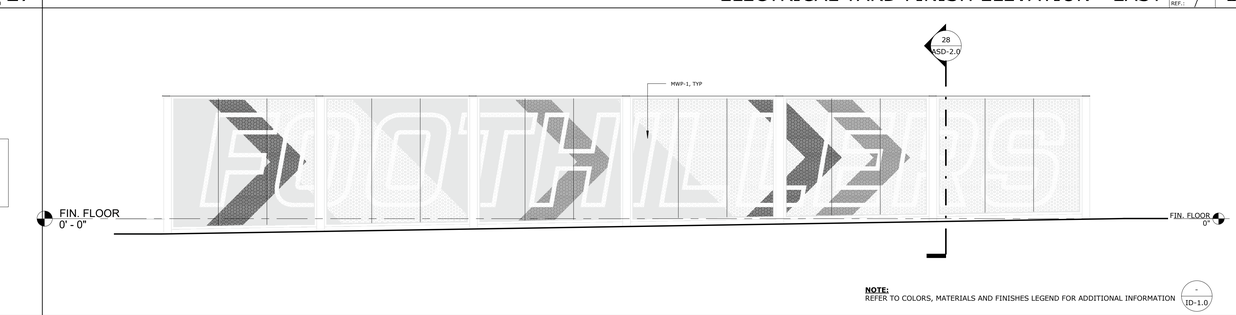

ELECTRICAL YARD FINISH ELEVATION - WEST — SCALE: 1/4" = 1'-0" — REF.: / — 11

STAMPS

LICENSED ARCHITECT — RUSSELL CLARKE — No. C 31940 — Exp. 12/31/22 — STATE OF CALIFORNIA

IDENTIFICATION STAMP
DIV. OF THE STATE ARCHITECT
APP: 04-120895 INC:
REVIEWED FOR
SS ☑ FLS ☑ ACS ☑
DATE: 06/27/2022

CONSULTANT BRANDING

RUHNAU CLARKE ARCHITECTS

GHS KITCHEN & WEIGHTROOM: 06/13/2022 DSA SUBMITTAL

PROJECT No. :1-30-55
6/21/2022 3:17:13 PM

DRAWN BY: CHECKED BY:

ISSUE No.	DATE	DESCRIPTION	REVISION No.	DATE	DESCRIPTION
ISSUE No.	DATE	DESCRIPTION	REVISION No.	DATE	DESCRIPTION
ISSUE No.	DATE	DESCRIPTION	REVISION No.	DATE	DESCRIPTION
ISSUE No.	DATE	DESCRIPTION	REVISION No.	DATE	DESCRIPTION

RUHNAUCLARKE.COM

3775 TENTH STREET, RIVERSIDE CALIFORNIA 92501 (951) 684 4664 / 5751 PALMER WAY, SUITE C, CARLSBAD CALIFORNIA 92010 (760) 438 5899

GHS KITCHEN & WEIGHTROOM
GROSSMONT HIGH SCHOOL
1100 MURRAY DR, EL CAJON, CA 92020
GROSSMONT UNION HIGH SCHOOL

SITE
SITE DETAILS

ASD-3.0

1-30-55

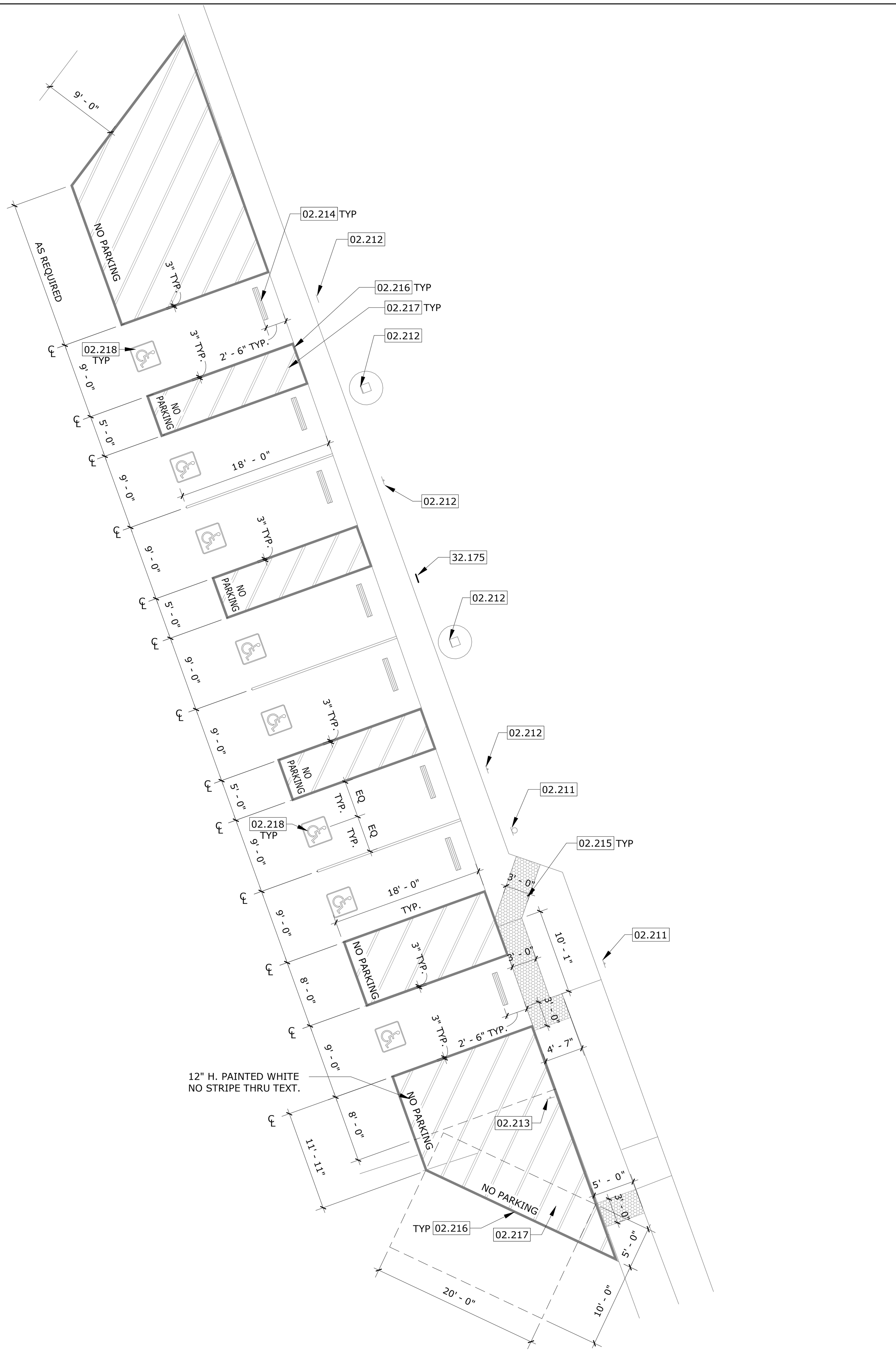

ENLARGED STUDENT PARKING — SCALE: 1" = 10'-0" — REF.: 1/AS-1.1 — 23

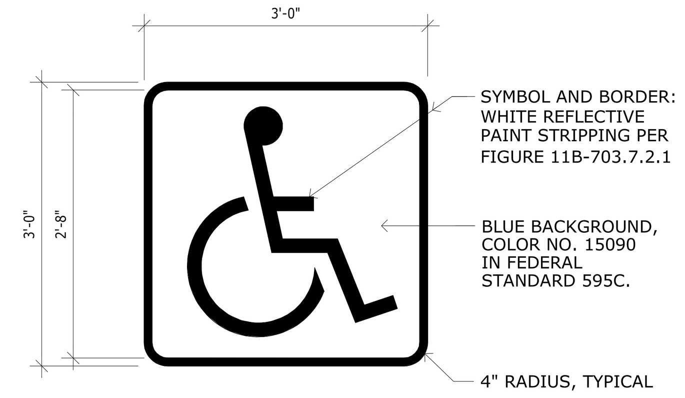

NOTES:

1. STENCIL: BACKGROUND, STENCIL AND BORDER STENCILED ON TO PARKING SURFACE IN EACH ACCESSIBLE STALL.
2. LOCATE PER ACCESSIBLE PARKING STALL DETAIL(S)
3. MINIMUM 2" WIDTH FOR ALL LINES
4. VISUALLY CENTER SYMBOL WITHIN BORDER
5. SYMBOL PROPORTIONS TO MATCH CBC FIGURE 11B-703.7.2.1

INTERNATIONAL SYMBOL OF ACCESSIBILITY

(E) ADA PARKING ISA EMBLEM — SCALE: 3/4" = 1'-0" — REF.: / — 20

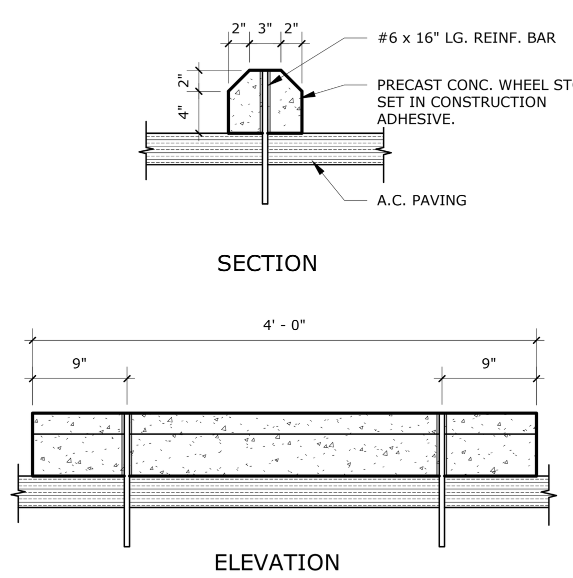

(E) CONCRETE WHEELSTOP — SCALE: 1" = 1'-0" — REF.: / — 15

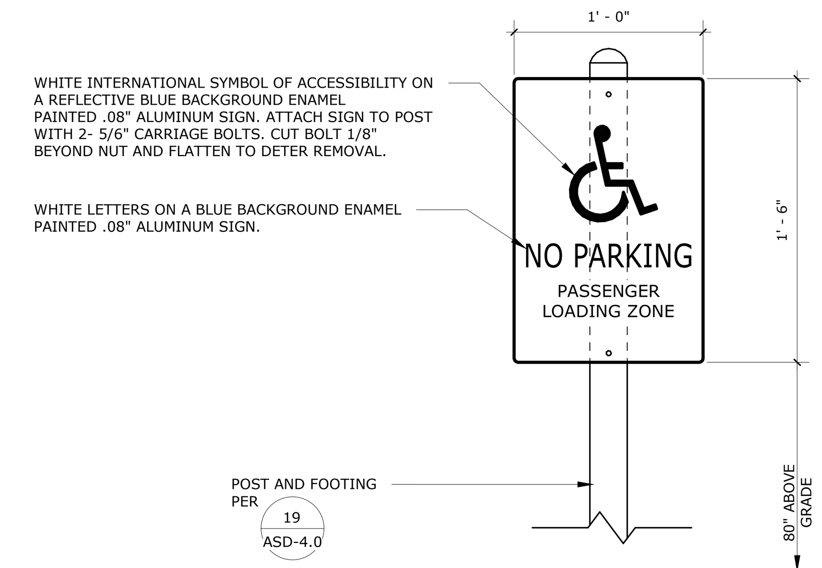

LOADING/UNLOADING SIGN — SCALE: 1 1/2" = 1'-0" — REF.: / — 10

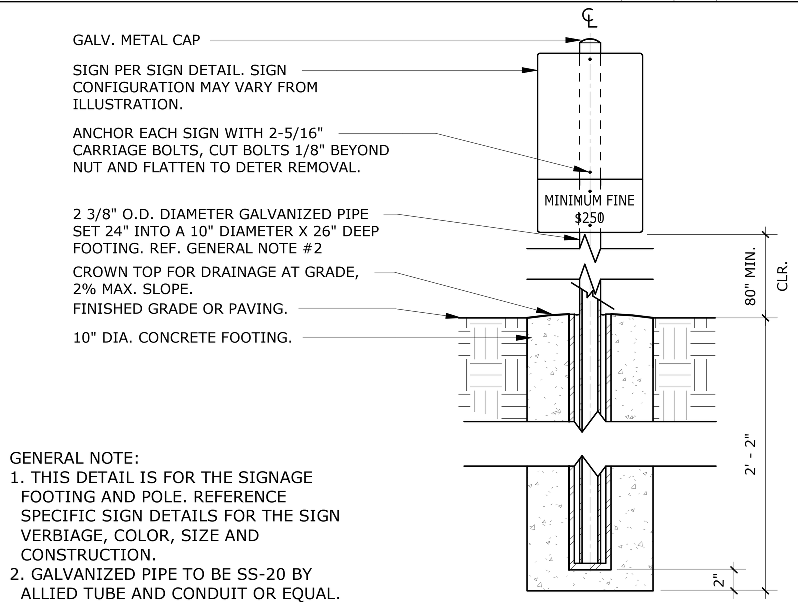

GENERAL NOTE:
1. THIS DETAIL IS FOR THE SIGNAGE FOOTING AND POLE. REFERENCE SPECIFIC SIGN DETAILS FOR THE SIGN VERBIAGE, COLOR, SIZE AND CONSTRUCTION.
2. GALVANIZED PIPE TO BE SS-20 BY ALLIED TUBE AND CONDUIT OR EQUAL.

(E) SIGN POST FOOTING — SCALE: 1" = 1'-0" — REF.: / — 19

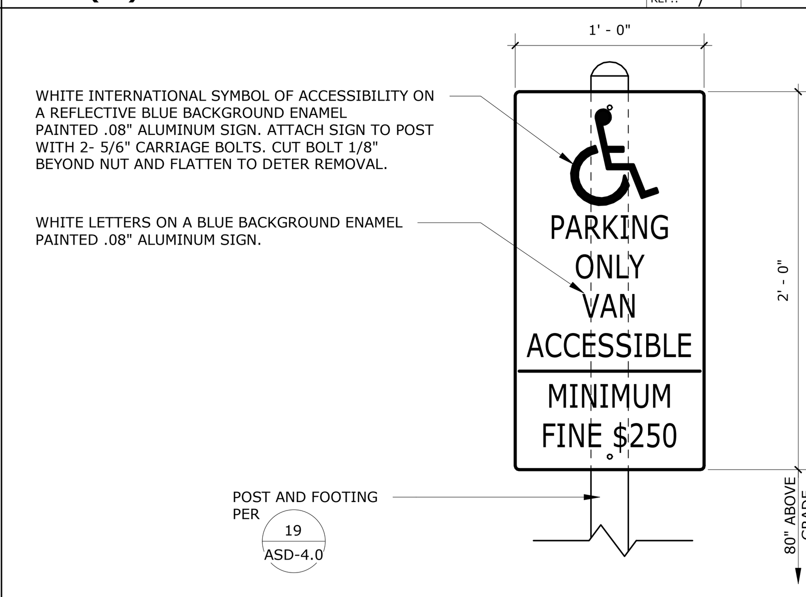

(E)ACCESSIBLE VAN SIGN — SCALE: 1 1/2" = 1'-0" — REF.: / — 14

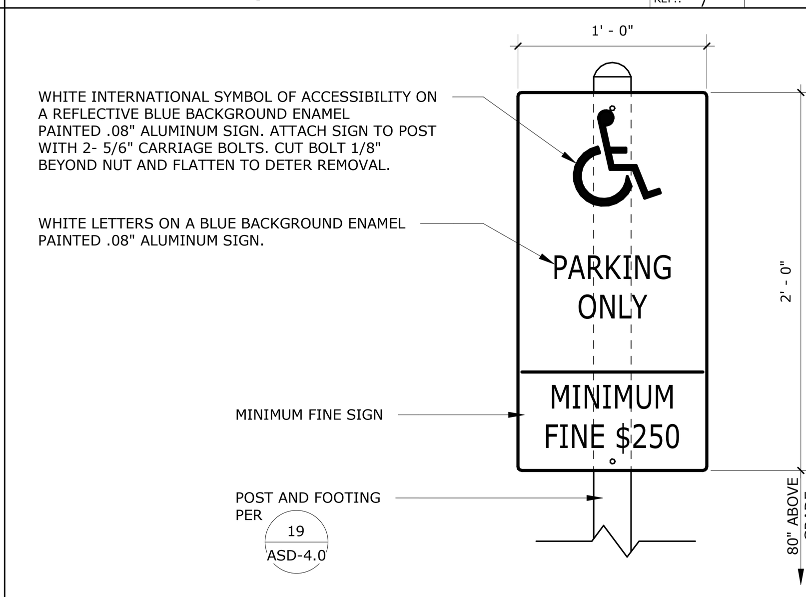

(E)ACCESSIBLE PARKING SIGN — SCALE: 1 1/2" = 1'-0" — REF.: / — 9

STAMPS

IDENTIFICATION STAMP
DIV. OF THE STATE ARCHITECT
APP: 04-120895 INC:
REVIEWED FOR
SS ☑ FLS ☑ ACS ☑
DATE: 06/27/2022

LICENSED ARCHITECT — ROGER CLARKE — No. C-21340 — Exp. 10-31-23 — STATE OF CALIFORNIA

CONSULTANT BRANDING

RUHNAU CLARKE ARCHITECTS

KEYNOTES

02.211	EXISTING ACCESSIBLE VAN PARKING SIGN PER DETAIL 14/ASD-4.0 TO REMAIN, PROTECT IN PLACE
02.212	EXISTING ACCESSIBLE PARKING SIGN PER DETAIL 9/ASD-4.0 TO REMAIN, PROTECT IN PLACE
02.213	EXISTING PASSENGER LOADING SIGN PER A#04-113655 TO REMAIN, PROTECT IN PLACE
02.214	EXISTING CONCRETE WHEELSTOP PER DETAIL 15/ASD-4.0 TO REMAIN, PROTECT IN PLACE
02.215	EXISTING DETECTABLE WARNING PER A#04-1136555 TO REMAIN, PROTECT IN PLACE
02.216	EXISITNG 3" PAVEMENT MARKING TO REMAIN
02.217	EXISITNG LOADING AN UNLOADING ZONE PER A#04-113655
02.218	EXISTING ISA SYMBOL PER DETAIL 20/ASD-4.0, FRONT EDGE OF ISA SYMBOL TO ALIGN WITH EDGE OF PARKING STRIPING
02.219	EXISTING FIXED BOLLARD PER DETAIL 1/ASD-4.0
02.220	EXISTING WHITE PAVEMENT MARKINGS TO REMAIN, PROTECT IN PLACE
32.172	TOW-AWAY PARKING SIGN PER DETAIL 3/ASD-4.0
32.173	DETECTABLE WARNING TILES PER DETAIL 4/ASD-2.0
32.174	WARNING RAIL PER DETAIL 11/ASD-4.0
32.175	NEW ACCESIBLE PARKING SIGN TO MATCH EXISTING SIGNS PER DETAIL 9/ASD-4.0

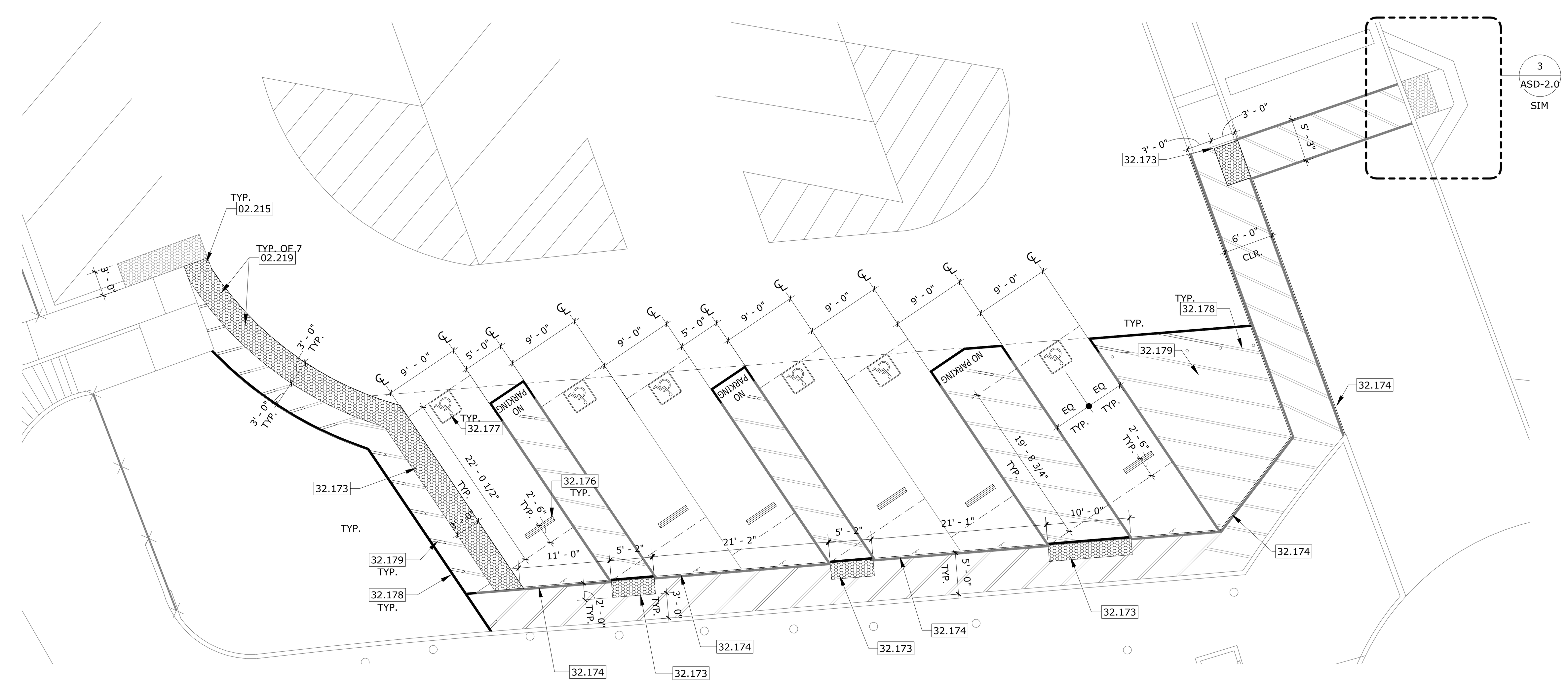

ENLARGED STAFF PARKING - MODERNIZATION — SCALE: 1" = 10'-0" — REF.: 1/AS-1.1 — 7

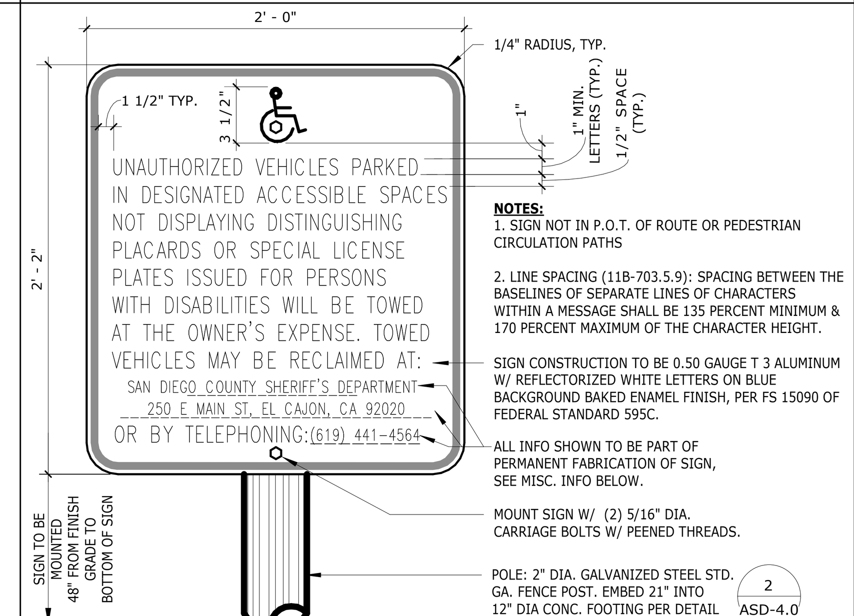

NOTES:
1. SIGN NOT IN P.O.T. OF ROUTE OR PEDESTRIAN CIRCULATION PATHS

2. LINE SPACING (11B-703.5.9): SPACING BETWEEN THE BASELINES OF SEPARATE LINES OF CHARACTERS WITHIN A MESSAGE SHALL BE 135 PERCENT MINIMUM & 170 PERCENT MAXIMUM OF THE CHARACTER HEIGHT.

SIGN CONSTRUCTION TO BE 0.50 GAUGE T 3 ALUMINUM W/ REFLECTORIZED WHITE LETTERS ON BLUE BACKGROUND BAKED ENAMEL FINISH, PER FS 15090 OF FEDERAL STANDARD 595C.

ALL INFO SHOWN TO BE PART OF PERMANENT FABRICATION OF SIGN, SEE MISC. INFO BELOW.

(N) TOW-AWAY PARKING SIGN — SCALE: 1 1/2" = 1'-0" — REF.: / — 3

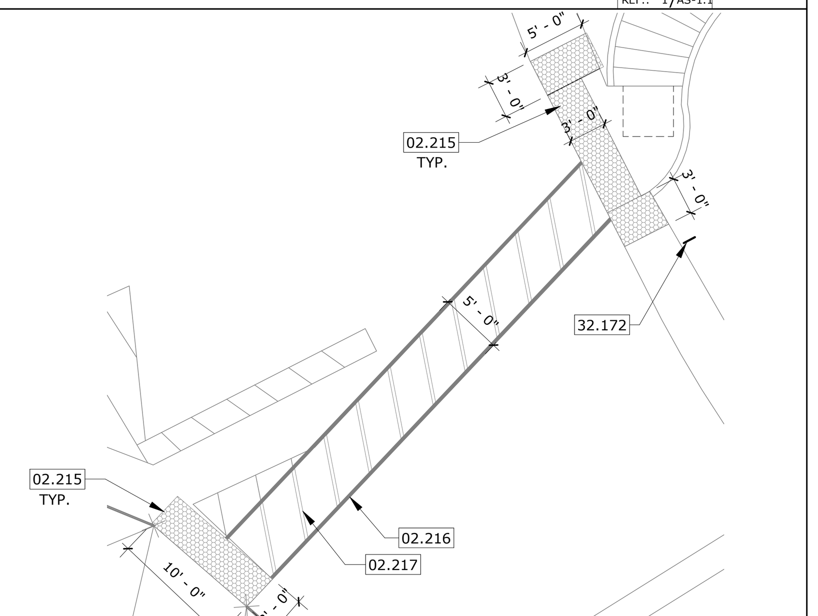

ENLARGED CROSSWALK — SCALE: 1" = 10'-0" — REF.: 1/AS-1.1 — 22

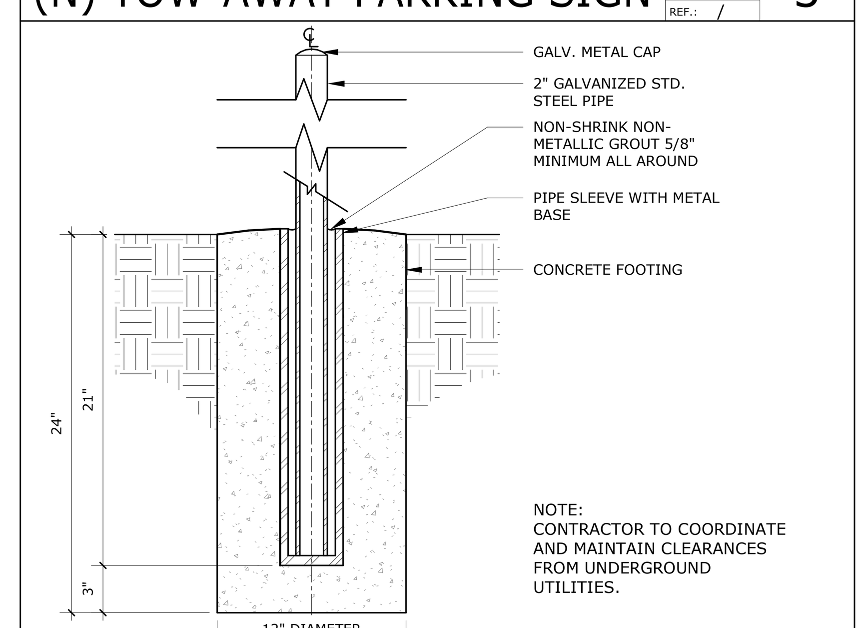

NOTE:
CONTRACTOR TO COORDINATE AND MAINTAIN CLEARANCES FROM UNDERGROUND UTILITIES.

(N) SIGN POST FOOTING — SCALE: 1 1/2" = 1'-0" — REF.: / — 2

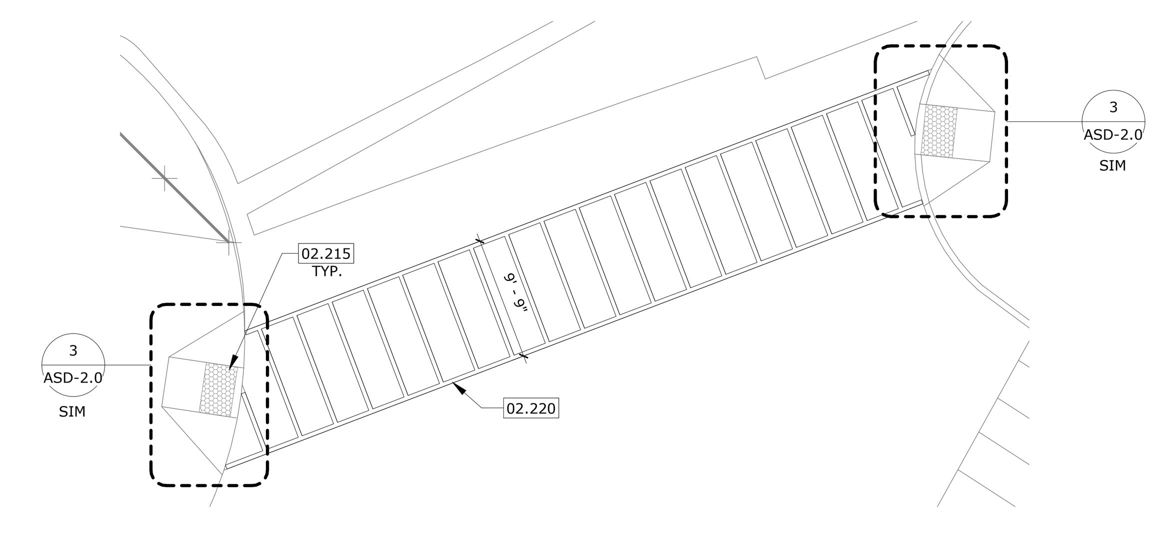

ENLARGED CROSSWALK — SCALE: 1" = 10'-0" — REF.: 1/AS-1.1 — 21

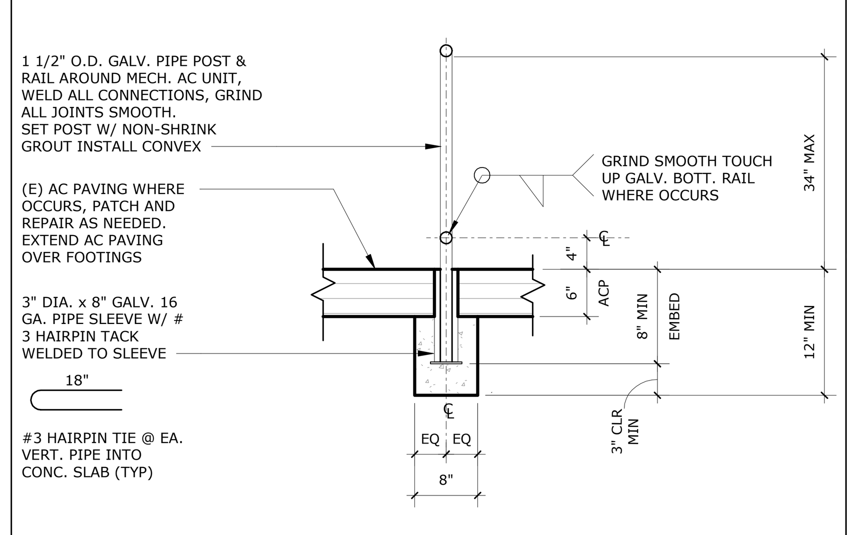

WARNING RAIL CONC. FTG — SCALE: 3/4" = 1'-0" — REF.: 11/ASD-4.0 — 16

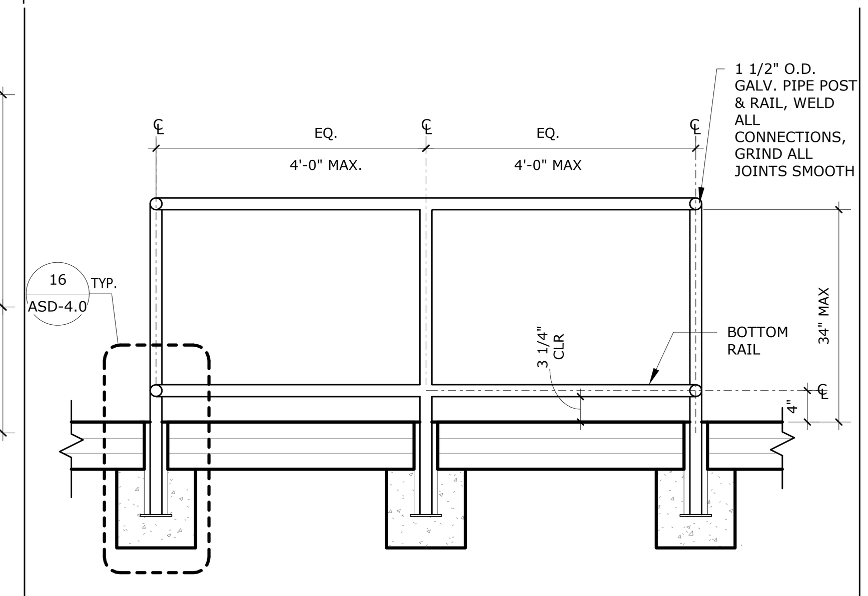

WARNING RAIL ELEVATION — SCALE: 3/4" = 1'-0" — REF.: / — 11

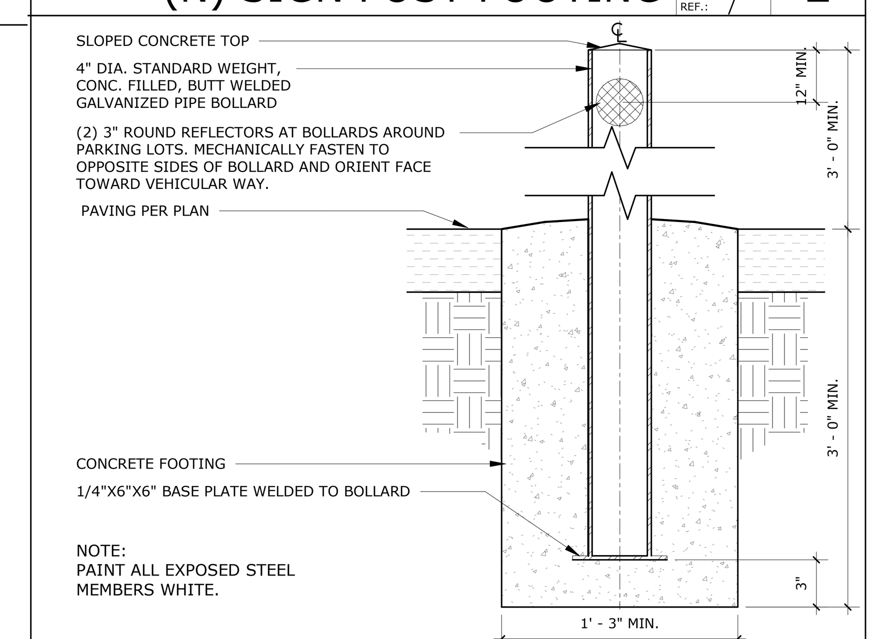

NOTE:
PAINT ALL EXPOSED STEEL MEMBERS WHITE.

(E) FIXED BOLLARD DETAIL — SCALE: 1 1/2" = 1'-0" — REF.: / — 1

GHS KITCHEN & WEIGHTROOM: 06/13/2022 DSA SUBMITTAL

PROJECT No. :1-30-55
6/21/2022 3:17:15 PM

DRAWN BY: CHECKED BY:
ISSUE No.___ DATE___ DESCRIPTION___ (×4)
REVISION No.___ DATE___ DESCRIPTION___ (×4)

RUHNAUCLARKE.COM
3775 TENTH STREET, RIVERSIDE CALIFORNIA 92501 (951) 684 4664 / 5751 PALMER WAY, SUITE C, CARLSBAD CALIFORNIA 92010 (760) 438 5899

GHS KITCHEN & WEIGHTROOM
GROSSMONT HIGH SCHOOL
1100 MURRAY DR, EL CAJON, CA 92020
GROSSMONT UNION HIGH SCHOOL

SITE DETAILS

ASD-4.0

1-30-55

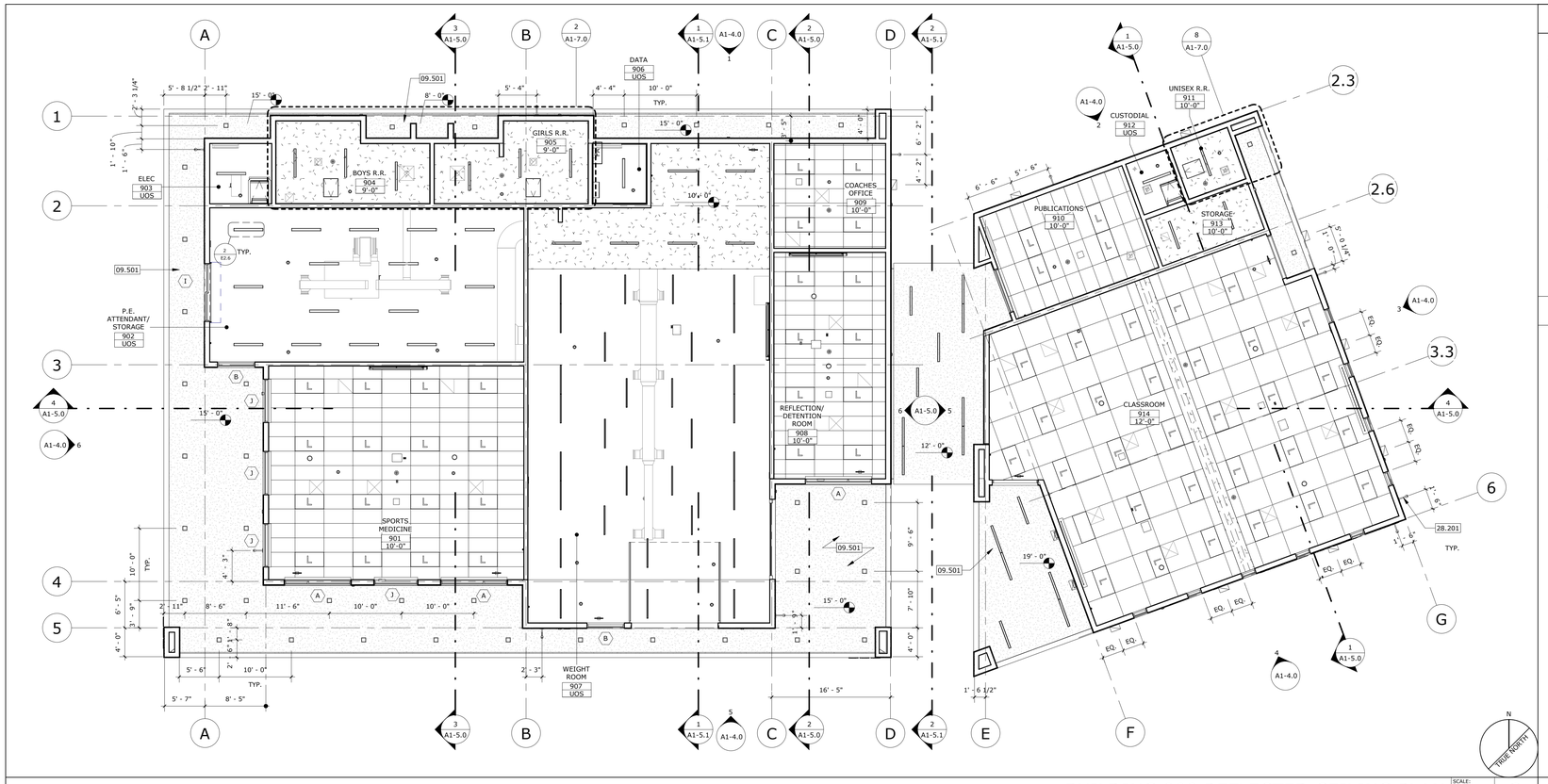

BUILDING 900 REFLECTED CEILING PLAN 2

SCALE: 1/8" = 1'-0"
REF.: 1/A1-4.0

CEILING PLAN GENERAL NOTES

1. ALL LIGHT FIXTURES TO BE CENTERED IN SPACE, U.N.O.
2. ALL CEILING HEIGHTS ARE RELATIVE TO THE FINISH FLOOR DIRECTLY BENEATH.
3. ACOUSTICAL CEILING TILES AND GRID TO BE CENTERED IN ROOM. SEE SHEET (1/AD-4.0) FOR SUSPENDED CEILING SEISMIC BRACING DETAILS AND TRAPEZE DETAILS
4. ALL EXPOSED STRUCTURE, INCLUDING MECHANICAL & PLUMBING EQUIPMENT TO BE PAINTED PER CMF ON SHEET (-/ID-1.0)
5. ALL MECHANICAL, ELECTRICAL AND PLUMBING EQUIPMENT TO BE HELD AS TIGHT AS POSSIBLE TO CEILING STRUCTURE
6. ALL CONDUIT IN EXPOSED AREAS WHERE CEILING STRUCTURE IS EXPOSED CAN ONLY PENETRATE WALLS AT ROOF / FLOOR DECK
7. REFER TO ELECTRICAL & MECHANICAL DRAWINGS FOR CEILING COMPONENT CALLOUTS AND FIXTURE TYPES
8. PAINT ALL SUPPLY & RETURNS OF ALL ACCENT PAINTED CEILING AREAS

CEILING PLAN LEGEND

- EXTERIOR PLASTER CEILING SYSTEM (25/AD-4.0)
- GYPSUM BOARD CEILING SYSTEM (27/AD-4.0)
- ACT-1: 2'-0" x 4'-0" SUSPENDED TEE BAR ACOUSTICAL CEILING, SEE DETAIL (1/AD-4.0)
- ACT-3: 4'-0" x 4'-0" SUSPENDED TEE BAR ACOUSTICAL CEILING, SEE DETAIL (1/AD-4.0)
- 24"x30" CEILING ACCESS PANEL, SEE DETAIL (29/AD-4.0)
- ROOF ACCESS HATCH & LADDER, SEE DETAIL (6/AD-3.0)
- 8' - 0" CEILING HEIGHT SPOT ELEVATION
- RECESSED CAN LIGHT PER ELECT. DWG. (-/E2.1)
- PENDANT LIGHT FIXTURE PER ELECT. DWG. (-/E2.1)
- 2'-0" x 4'-0" TROFFER LIGHT. SEE ELECT. DWG.
- 4'-0" LONG RECESSED LINEAR LIGHT FIXTURE PER ELECT. DWG.
- 4'-0" LONG PENDANT LINEAR LIGHT FIXTURE PER ELECT. DWG.
- 4'-0" LONG SURFACE MOUNTED LINEAR LIGHT FIXTURE PER ELECT. DWG.
- 4'-0" LONG STRIP LIGHT FIXTURE PER ELECT. DWG.
- LINEAR SUPPLY DIFFUSER PER MECH. DWG. (-/M2-2.1)
- WALL MOUNTED LIGHT FIXTURE PER ELECT. DWG.
- SUPPLY DIFFUSER PER MECH. DWG. (-/M2-2.1)
- RETURN AIR GRILLE PER MECH. DWG. (-/M2-2.1)
- EXHAUST REGISTER PER MECH. DWG. (-/M2-2.1)

NOTE:
REFER TO COLORS, MATERIALS AND FINISHES LEGEND FOR ADDITIONAL INFORMATION (-/ID-1.0)

STAMPS

LICENSED ARCHITECT — JENNIFER CLARKE — No. C 31040 — Exp. 12/31/22 — STATE OF CALIFORNIA

IDENTIFICATION STAMP
DIV. OF THE STATE ARCHITECT
APP: 04-120895 INC:
REVIEWED FOR
SS ☑ FLS ☑ ACS ☑
DATE: 06/27/2022

CONSULTANT BRANDING

RUHNAU CLARKE ARCHITECTS

KEYNOTES

05.505	METAL LADDER TO ROOF ACCESS HATCH ABOVE, SEE DETAIL 6/AD-3.0
06.411	STAINLESS STEEL COUNTERTOP WITHOUT BACKSPLASH, OPEN BELOW AT SLIDING WINDOW
06.412	PLASTIC LAMINIATE COUNTERTOP WITH BACKSPLASH AT BASE CABINET, SEE ELEVATIONS FOR CASEWORK BELOW
06.413	PLASTIC LAMINIATE COUNTERTOP WITH BACKSPLASH, OPEN BELOW, SEE DETAIL 14/AD-5.0
09.501	EXTERIOR PLASTER SOFFIT CEILING, REFER TO RCP LEGEND
10.112	MARKERBOARD, SEE DETAIL 6/AD-5.0
10.114	TACKABLE WALL PANEL SYSTEM, SEE DETAIL 1/AD-8.0
10.116	WALL MOUNTED MONITOR, SEE DETAIL 10/AD-8.0
10.561	METAL STORAGE SHELVING PER SPECS, PROVIDE FULL HEIGHT P-LAM SIDE PANELS AT ALL EXPOSED SIDES, REFER TO DETAIL 2/AD-5.0
10.564	MOBILE STORAGE SYSTEM PER SPEC SECTION 10 56 23
10.882	EXISTING PRINTERS TO BE RELOCATED TO THIS LOCATION. PROVIDE ELECTRICAL INFASTRUCTER PER SHEET E3.1
11.470	ICE MAKER MACHINE (O.F.C.I.) W/ ACCESSIBLE FRONT OPENING BIN, SEE SPECS
11.522	PROJECTOR PER 13/AD-8.0
22.405	SINK PER PLUMBING FLOOR PLAN SHEET 2/P1-2.2 (BLDG 900) / PLUMBING FLOOR PLAN SHEET 1/P2-2.2 (BLDG 400) & DETAIL 4/AD-5.0
22.406	MOP SINK PER PLUMBING FLOOR PLAN SHEET 2/P1-2.2 (BLDG 900) / PLUMBING FLOOR PLAN SHEET 1/P2-2.2 (BLDG 400) & DETAIL 4/AD-8.0
22.471	HI-LO DRINKING FOUNTAIN PER PLUMBING FLOOR PLAN 2/P1-2.2 (BLDG 900) & DETAILS 21 & 22/AD-1.0
28.201	SURVEILLANCE CAMERA, WALL MOUNTED, PER ELEC PLAN E4.1 & DETAILS E4.8

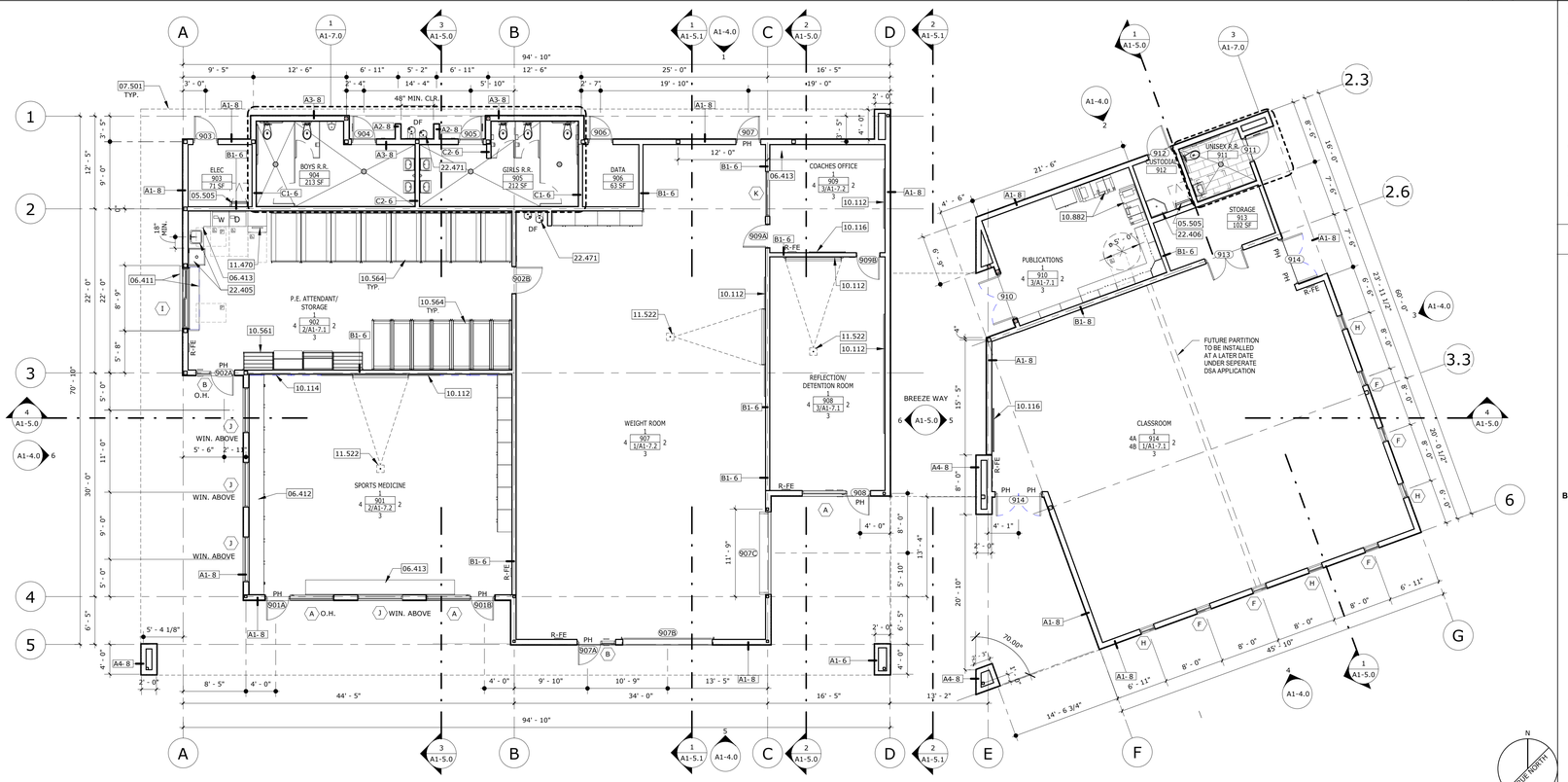

BUILDING 900 FLOOR PLAN 1

SCALE: 1/8" = 1'-0"
REF.: 1/A1-4.0

FLOOR PLAN GENERAL NOTES

1. VERIFY ALL DIMENSIONS PRIOR TO CONSTRUCTION.
2. ALL DIMENSIONS ARE TO FACE OF STUD, CENTERLINE OF COLUMN OR EDGE OF SLAB, U.N.O.
3. SEE SHEET (-/AD-2.0) FOR WALL TYPE INFORMATION.
4. PROVIDE R-19 BATT INSULATION AT ALL EXTERIOR WALLS, U.N.O. GYPSUM BOARD AND INSULATION SHALL EXTEND FULL HEIGHT OF WALL TO UNDERSIDE OF ROOF STRUCTURE.
5. PROVIDE STUD BRACING AND SUPPORT FOR ALL WALL MOUNTED FIXTURES AND ACCESSORIES. PER DETAIL (9/S0-1.6)
6. SEE SHEET (-/A1-8.0) FOR DOOR AND WINDOW INFORMATION
7. SET DOORS ADJACENT TO WALLS A MIN. OF 4" AWAY FROM WALL U.N.O.
8. FLOOR SINKS OR DRAINS OR TROUGHS EXPOSED TO P.O.T. OR PEDESTRIAN CIRCULATION PATHS SHALL HAVE 1/2" MAX. GRATE OPENINGS IN ALL DIRECTIONS. ELONGATED OPENINGS SHALL BE PLACED SO THAT THE LONG DIMENSION IS PERPENDICULAR TO THE DOMINANT DIRECTION OF TRAVEL (CBC SECTION 11B-302.3).

FLOOR PLAN LEGEND

- WALL - WOOD STUDS @16" O.C., SEE NOTES BELOW ADDITIONAL INFO. AND FOR SHEAR WALL SEE STRUCTURAL DWG.
- WALL TYPE, REFER TO **AD-2.0**
- A1-8 — WALL STUD WIDTH

NOTES:
1. ALL EXTERIOR WALLS, PROVIDE SHEATHING PER STRUCTURAL DRAWINGS. PROVIDE THERMAL BATT INSULATION AND EXTEND 12" MIN. ABOVE ROOF FINISH.
2. U.N.O., ALL INTERIOR STUDS SHALL EXTEND UP TO THE UNDERSIDE OF ROOF OR FLOOR STRUCTURE. PROVIDE SOUND BATT INSULATION UP TO THE UNDERSIDE OF ROOF STRUCTURE.

- P.H. — PANIC HARDWARE
- 101 — DOOR NUMBER
- 45 MIN. — FIRE RATING

FOR DOOR SCHED., REFER TO SHEETS **A1-8.0**

- 17 — WINDOW NUMBER, FOR WINDOW SCHED. SEE SHEET **A1-8.0**
- OD / RD — OVERFLOW DRAIN AND ROOF DRAIN
- BOYS LOCKER ROOM — ROOM NAME
- 101 — ROOM NUMBER
- 4 / A1-5.0 — INT. ELEVATION ORIENTATION, TYP.
- 1 / A2-9.2 — INT. ELEV. DETAIL AND SHEET NUMBER, WHEN INT. ELEV. IS NOT PROVIDED THAN THE FINISH SCHED. DETAIL AND SHEET NUMBER IS PROVIDED
- R-FE — FIRE EXTINGUISHER, RECESSED MOUNTED, REFER TO DET.
- ROOF ACCESS LADDER & HATCH REFER TO DET.
- 30" x 48" ACCESSIBLE CLEAR SPACE
- 60" MIN. DIA. ACCESSIBLE CLEAR SPACE
- TILE OVER DEPRESSED FLOOR SLAB SLOPE TO DRAIN 1/8" PER FOOT MIN. REFER TO STRUCTURAL FOR FLOOR SLAB INFO REFER TO CMF FOR TILE INFO (-/ID-1.0)

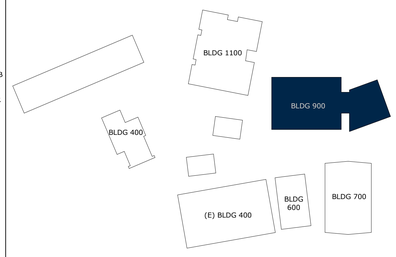

KEY PLAN

NTS

GHS KITCHEN & WEIGHTROOM: 06/13/2022 DSA SUBMITTAL

PROJECT No. :1-30-55
6/21/2022 3:14:13 PM

DRAWN BY: CHECKED BY:

ISSUE No.	DATE	DESCRIPTION	REVISION No.	DATE	DESCRIPTION
ISSUE No.	DATE	DESCRIPTION	REVISION No.	DATE	DESCRIPTION
ISSUE No.	DATE	DESCRIPTION	REVISION No.	DATE	DESCRIPTION
ISSUE No.	DATE	DESCRIPTION	REVISION No.	DATE	DESCRIPTION

RUHNAUCLARKE.COM

3775 TENTH STREET, RIVERSIDE CALIFORNIA 92501 (951) 684 4664 / 5751 PALMER WAY, SUITE C, CARLSBAD CALIFORNIA 92010 (760) 438 5899

GHS KITCHEN & WEIGHTROOM
GROSSMONT HIGH SCHOOL
1100 MURRAY DR, EL CAJON, CA 92020
GROSSMONT UNION HIGH SCHOOL

BUILDING 900
FLOOR PLAN AND RCP

A1-1.0

1-30-55

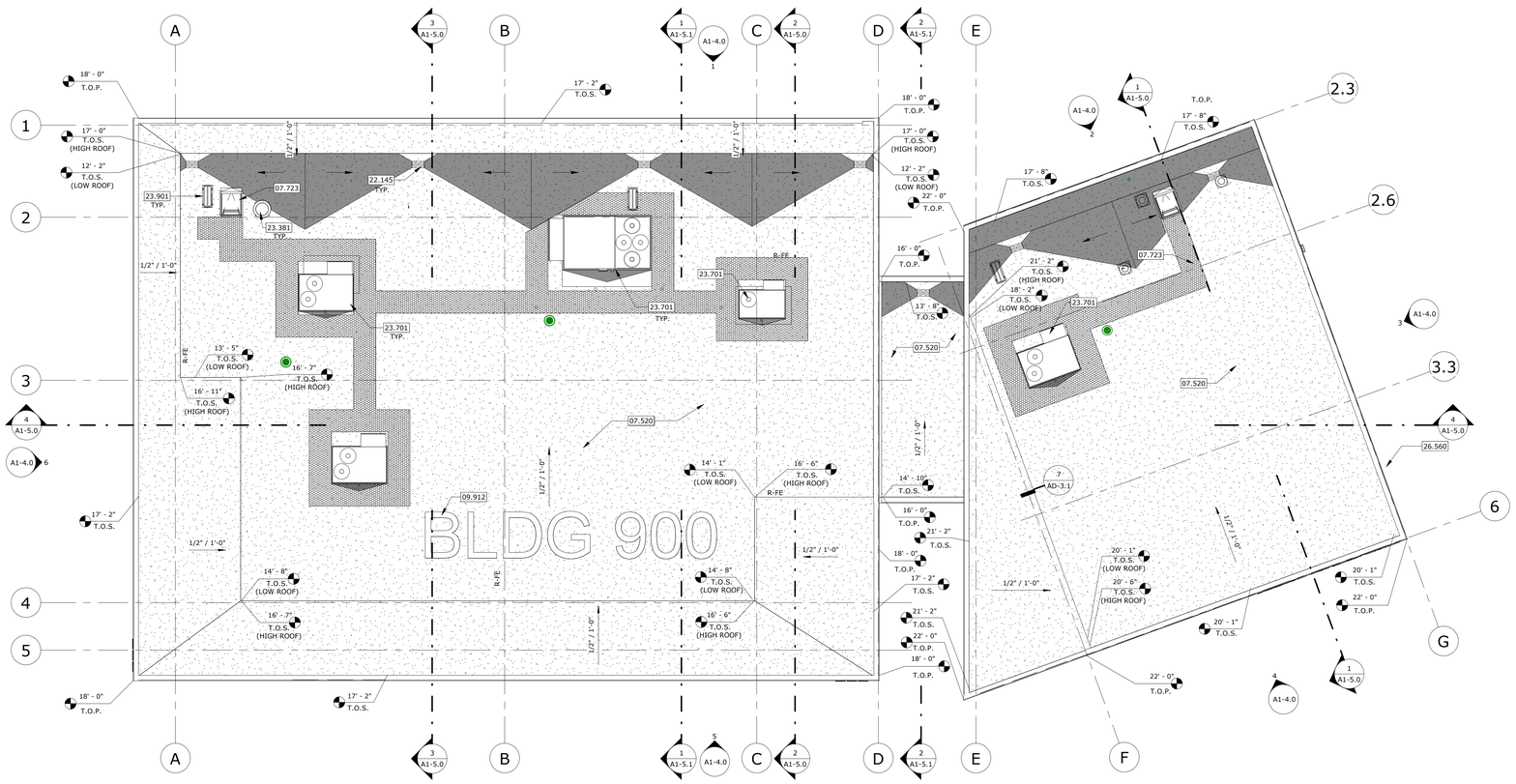

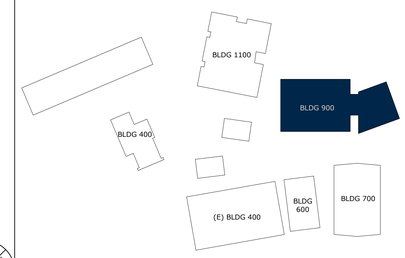

STAMPS

LICENSED ARCHITECT
RUHNAU CLARKE
No. C-31040
Exp. 12/31/22
STATE OF CALIFORNIA

IDENTIFICATION STAMP
DIV. OF THE STATE ARCHITECT
APP: 04-120895 INC:
REVIEWED FOR
SS ☑ FLS ☑ ACS ☑
DATE: 06/27/2022

CONSULTANT BRANDING

RUHNAU
CLARKE
ARCHITECTS

ROOF PLAN GENERAL NOTES

1. SEE DETAIL 1/AD-3.0 FOR TYPICAL ROOF ASSEMBLY.
2. FOR PIPE VENT PENETRATIONS THROUGH ROOF, REFER TO DETAIL 11/AD-3.0 & 12/AD-3.0 FOR TYP. INFO.
3. ALL CRICKETS SHALL BE SHAPED WITH PLYWOOD WITH A MIN. 1.5% SLOPE TO ROOF AND OVERFLOW DRAINS.
4. PROVIDE 36" WIDE CONTINUOUS WALKWAY TREAD FROM THE LANDING OF EACH ROOF ACCESS HATCH TO EACH MECHANCIAL UNIT. TREAD AT EACH UNIT TO SURROUND PERIMETER
5. AT MECHANICAL EQUIPMENT, REFER TO DETAIL 3/AD-3.0 & 4/AD-3.0 FOR ROOF CURB

ROOF PLAN LEGEND

- SINGLE-PLY CLASS "A" MEMBRANE ROOFING, 1/2":12" MIN. SLOPE (U.N.O.) TO ROOF OVERFLOW, REFER TO DEATAIL: 1/AD-3.0
- ROOF CRICKET, 1/2":12" MIN. SLOPE TO ROOF AND OVERFLOW DRAIN, REFER TO DETAIL: 2/AD-3.0
- ROOF DRAIN WITH SEPARATE OVERFLOW DRAIN LINE, REFER TO DETAIL: 10/AD-3.0
- ROOF ACCESS HATCH, REFER TO DETAIL: 6/AD-3.0
- EXHAUST FAN, REFER TO MECHANICAL ROOF PLAN -/M1-2.1
- ROOF TRAFFIC PADS MIN. WIDTH 3 FT LOCATE NEAR ROOF EQUIPMENT FOR FUTURE MAINTENANCE

KEYNOTES

07.520	ROOF ASSEMBLY PER 1/AD-3.0
07.723	ROOF ACCESS HATCH & LADDER, REFER TO ARCHITECTURAL FLOOR PLAN & DETAIL 6/AD-3.0
09.912	BUILDING IDENTIFSCATION NUMBER PER DETAIL 30/AD-3.0
22.145	ROOF DRAIN PER 10/AD-3.0
23.381	EXHAUST FAN PER MECHANICAL ROOF PLAN, SHEET M1-2.2
23.701	ROOF TOP UNIT PER MECHANICAL ROOF PLAN & DETAIL 2/AD-3.0
23.901	MECHANICAL EQUIPMENTPER MECHANICAL ROOF PLAN & DETAIL 2/AD-3.0
26.560	EXTERIOR LIGHTING, PER ELECTRICAL SHEET E2.1

N
TRUE NORTH

ROOF PLAN 1
SCALE: 1/8" = 1'-0"
REF.: 1/A1-4.0

KEY PLAN
NTS

GHS KITCHEN & WEIGHTROOM: 06/13/2022 DSA SUBMITTAL

PROJECT No. :1-30-55
6/21/2022 3:33:43 PM

DRAWN BY: CHECKED BY:

ISSUE No.____ DATE____ DESCRIPTION____
ISSUE No.____ DATE____ DESCRIPTION____
ISSUE No.____ DATE____ DESCRIPTION____
ISSUE No.____ DATE____ DESCRIPTION____

REVISION No.____ DATE____ DESCRIPTION____
REVISION No.____ DATE____ DESCRIPTION____
REVISION No.____ DATE____ DESCRIPTION____
REVISION No.____ DATE____ DESCRIPTION____

RUHNAUCLARKE.COM
3775 TENTH STREET, RIVERSIDE CALIFORNIA 92501 (951) 684 4664 / 5751 PALMER WAY, SUITE C, CARLSBAD CALIFORNIA 92010 (760) 438 5899

GHS KITCHEN & WEIGHTROOM
GROSSMONT HIGH SCHOOL
1100 MURRAY DR, EL CAJON, CA 92020
GROSSMONT UNION HIGH SCHOOL

BUILDING 900
ROOF PLANS

A1-3.0

1-30-55

CPL ACCENT WALL PATTERN

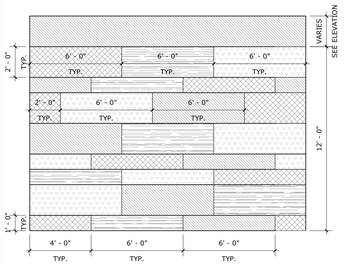

TYP. CPL ACCENT WALL PATTERN

CPL-3
CPL-4
CPL-5
CPL-6

NOTE:
REFER TO COLORS, MATERIALS AND FINISHES LEGEND FOR ADDITIONAL INFORMATION

ID-1.0

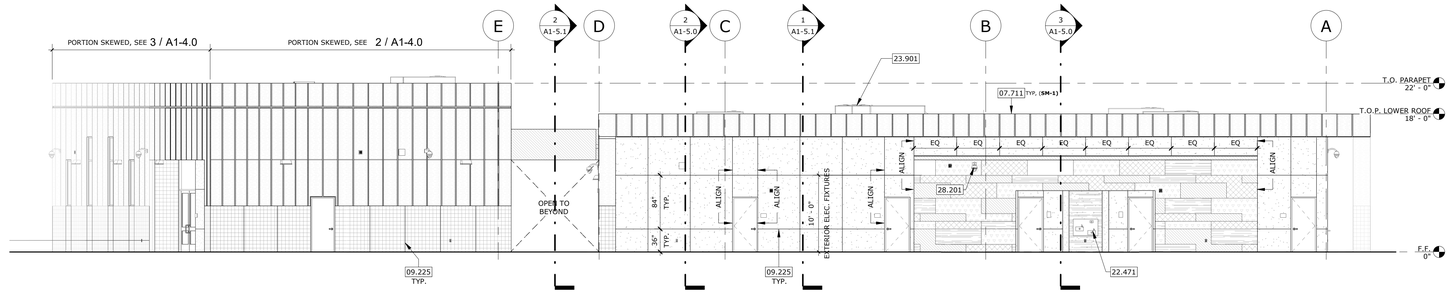

BUILDING 900 NORTH ELEVATION MODERNIZATION

SCALE: 1/8" = 1'-0" REF.: 1/A1-1.0 — 1

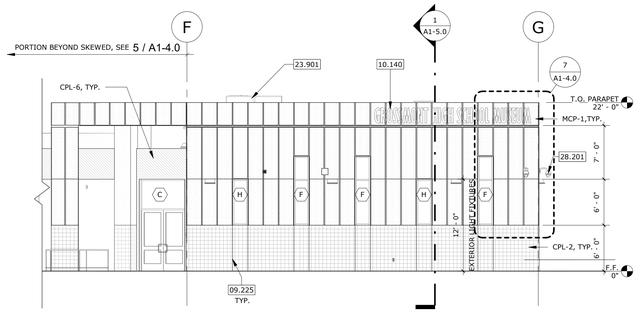

BUILDING 900 SOUTHEAST ELEVATION MODERNIZATION

SCALE: 1/8" = 1'-0" REF.: 1/A1-1.0 — 4

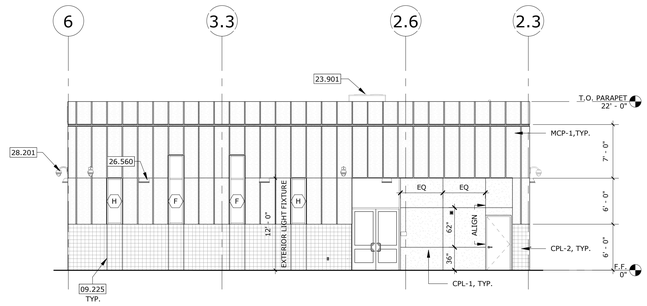

BUILDING 900 NORTHEAST ELEVATION MODERNIZATION

SCALE: 1/8" = 1'-0" REF.: 1/A1-1.0 — 3

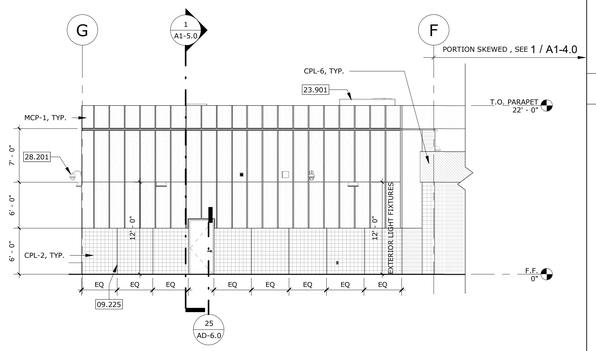

BUILDING 900 NORTHWEST ELEVATION MODERNIZATION

SCALE: 1/8" = 1'-0" REF.: 1/A1-1.0 — 2

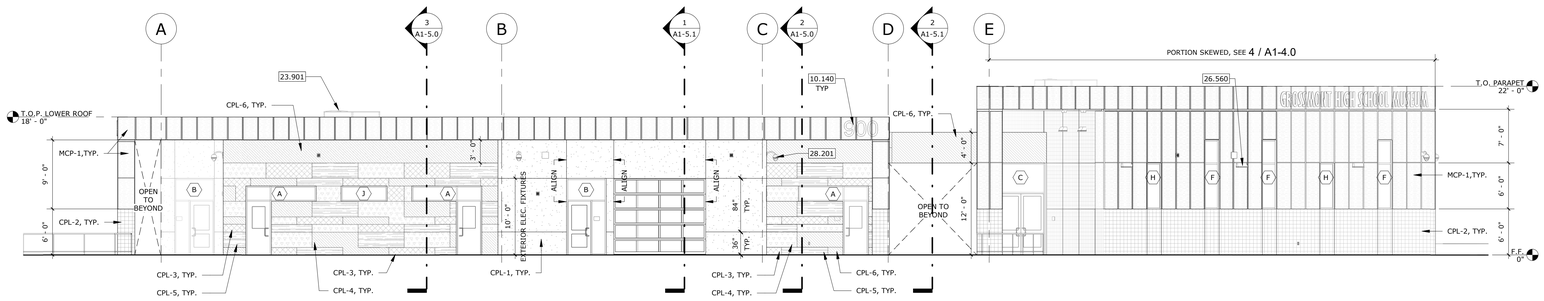

BUILDING 900 SOUTH ELEVATION MODERNIZATION

SCALE: 1/8" = 1'-0" REF.: 1/A1-1.0 — 5

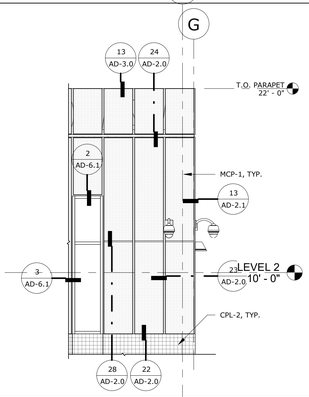

TYP. MCP ATTACHMENTS

SCALE: 1/4" = 1'-0" REF.: 4/A1-4.0 — 7

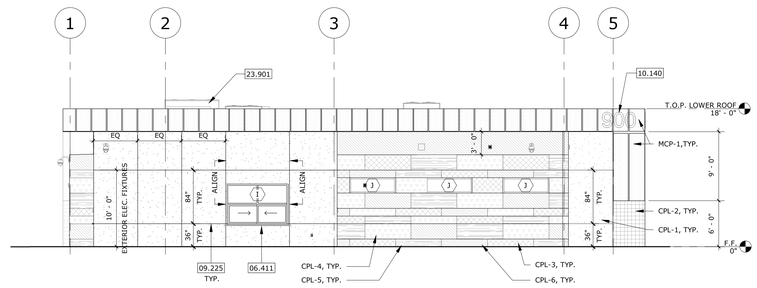

BUILDING 900 WEST ELEVATION MODERNIZATION

SCALE: 1/8" = 1'-0" REF.: 1/A1-1.0 — 6

STAMPS

LICENSED ARCHITECT — JENNIFER CLARKE — No. C 31040 — Exp. 12/31/2023 — STATE OF CALIFORNIA

IDENTIFICATION STAMP
DIV. OF THE STATE ARCHITECT
APP: 04-120895 INC:
REVIEWED FOR
SS ☑ FLS ☑ ACS ☑
DATE: 06/27/2022
AD
File No.

CONSULTANT BRANDING

RUHNAU CLARKE ARCHITECTS

GENERAL NOTES-BLDG ELEVATIONS

1. SLAB ON GRADE: 0'-0" = GLOBAL ELEVATION: 686.00'
2. FOR TYPICAL EXTERIOR CEMENT PLASTER REVEAL, SEE DETAIL: 9 / AD-2.1
3. FOR TYPICAL EXTERIOR CEMENT PLASTER INSIDE CORNER, SEE DETAIL: 3 / AD-2.1
4. FOR TYPICAL EXTERIOR CEMENT PLASTER OUTSIDE CORNER, SEE DETAIL: 4 / AD-2.1
5. FOR TYPICAL EXTERIOR CEMENT PLASTER CONTROL JOINTS, SEE DETAIL: 11 / AD-2.1

EXTERIOR ELEVATIONS LEGEND

- METAL COMPOSITE PANEL **(MCP-2)** *SEE SPECIFICATION SECTION 07 42 13.23*
- METAL COMPOSITE PANEL **(MCP-1)** *SEE SPECIFICATION SECTION 07 42 13.23* — FOR TYPICAL ATTACHMENT, SEE DETAIL 7 / A1-4.0
- CEMENT PLASTER - PLASTER FINISH **(CPL-1)** *SEE SPECIFICATION SECTION 09 24 00*
- CEMENT PLASTER - PLASTER FINISH **(CPL-2)** *SEE SPECIFICATION SECTION 09 24 00*
- CEMENT PLASTER - PLASTER FINISH **(CPL-3)** *SEE SPECIFICATION SECTION 09 24 00*
- CEMENT PLASTER - PLASTER FINISH **(CPL-4)** *SEE SPECIFICATION SECTION 09 24 00*
- CEMENT PLASTER - PLASTER FINISH **(CPL-5)** *SEE SPECIFICATION SECTION 09 24 00*
- CEMENT PLASTER - PLASTER FINISH **(CPL-6)** *SEE SPECIFICATION SECTION 09 24 00*

NOTE:
REFER TO COLORS, MATERIALS AND FINISHES LEGEND FOR ADDITIONAL INFORMATION, SHEET **ID-1.0**

KEYNOTES

06.411	STAINLESS STEEL COUNTERTOP WITHOUT BACKSPLASH, OPEN BELOW AT SLIDING WINDOW
07.711	COPING
09.225	PLASTER CONTROL JOINT PER DETAIL 11/AD-2.1
10.140	SIGNAGE PER DETAIL 26, 28, & 29/AD-8.0
22.471	HI-LO DRINKING FOUNTAIN PER PLUMBING FLOOR PLAN 2/P1-2.2 (BLDG 900) & DETAILS 21 & 22/AD-1.0
23.901	MECHANICAL EQUIPMENTPER MECHANICAL ROOF PLAN & DETAIL 2/AD-3.0
26.560	EXTERIOR LIGHTING, PER ELECTRICAL SHEET E2.1
28.201	SURVEILLANCE CAMERA, WALL MOUNTED, PER ELEC PLAN E4.1 & DETAILS E4.8

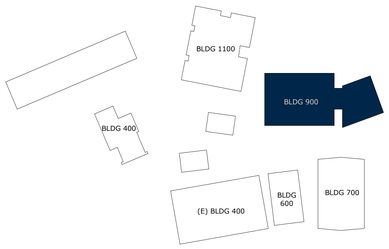

KEY PLAN NTS

GHS KITCHEN & WEIGHTROOM: 06/13/2022 DSA SUBMITTAL

PROJECT No. :1-30-55
6/21/2022 3:14:32 PM

DRAWN BY: CHECKED BY:

ISSUE No.____ DATE____ DESCRIPTION____
REVISION No.____ DATE____ DESCRIPTION____

RUHNAUCLARKE.COM

3775 TENTH STREET, RIVERSIDE CALIFORNIA 92501 (951) 684-4664 / 5751 PALMER WAY, SUITE C, CARLSBAD CALIFORNIA 92010 (760) 438 5899

GHS KITCHEN & WEIGHTROOM
GROSSMONT HIGH SCHOOL
1100 MURRAY DR, EL CAJON, CA 92020
GROSSMONT UNION HIGH SCHOOL

BUILDING 900
BUILDING ELEVATIONS

A1-4.0

1-30-55

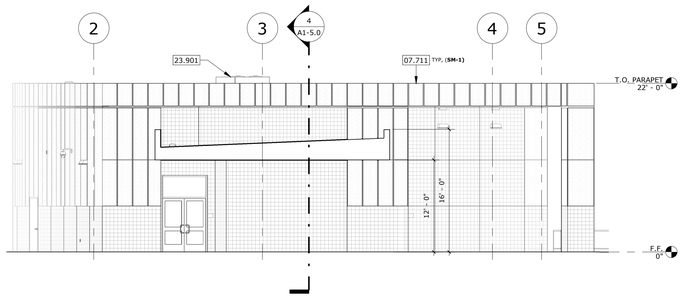

BUILDING ELEVATION - BREEZE WAY - 2 | SCALE: 1/8" = 1'-0" | REF.: 1/A1-1.0 | 5

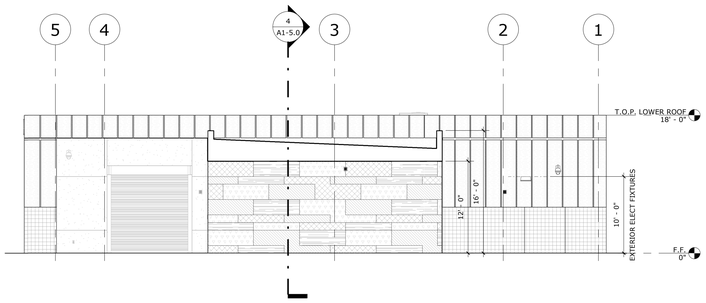

BUILDING ELEVATION - BREEZE WAY - 4 | SCALE: 1/8" = 1'-0" | REF.: 1/A1-1.0 | 6

GENERAL NOTES-BLDG ELEVATIONS

1. SLAB ON GRADE: 0'-0" = GLOBAL ELEVATION: 686.00'
2. FOR TYPICAL EXTERIOR CEMENT PLASTER REVEAL, SEE DETAIL: 9 / AD-2.1
3. FOR TYPICAL EXTERIOR CEMENT PLASTER INSIDE CORNER, SEE DETAIL: 3 / AD-2.1
4. FOR TYPICAL EXTERIOR CEMENT PLASTER OUTSIDE CORNER, SEE DETAIL: 4 / AD-2.1
5. FOR TYPICAL EXTERIOR CEMENT PLASTER CONTROL JOINTS, SEE DETAIL: 11 / AD-2.1

EXTERIOR ELEVATIONS LEGEND

- METAL COMPOSITE PANEL **(MCP-2)** *SEE SPECIFICATION SECTION 07 42 13.23*
- METAL COMPOSITE PANEL **(MCP-1)** *SEE SPECIFICATION SECTION 07 42 13.23* — FOR TYPICAL ATTACHMENT, SEE DETAIL 7 / A1-4.0
- CEMENT PLASTER - PLASTER FINISH **(CPL-1)** *SEE SPECIFICATION SECTION 09 24 00*
- CEMENT PLASTER - PLASTER FINISH **(CPL-2)** *SEE SPECIFICATION SECTION 09 24 00*
- CEMENT PLASTER - PLASTER FINISH **(CPL-3)** *SEE SPECIFICATION SECTION 09 24 00*
- CEMENT PLASTER - PLASTER FINISH **(CPL-4)** *SEE SPECIFICATION SECTION 09 24 00*
- CEMENT PLASTER - PLASTER FINISH **(CPL-5)** *SEE SPECIFICATION SECTION 09 24 00*
- CEMENT PLASTER - PLASTER FINISH **(CPL-6)** *SEE SPECIFICATION SECTION 09 24 00*

NOTE:
REFER TO COLORS, MATERIALS AND FINISHES LEGEND FOR ADDITIONAL INFORMATION, SHEET **ID-1.0**

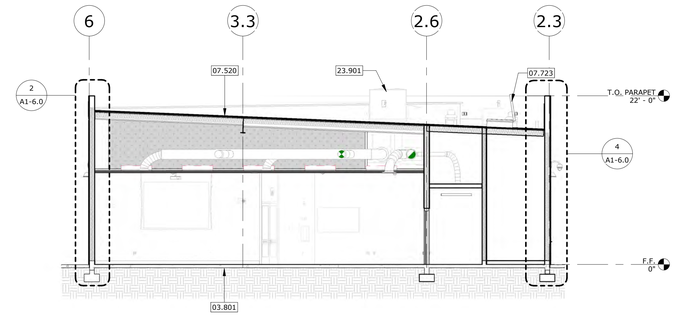

SECTION 1 - WEIGHT ROOM BLDG | SCALE: 1/8" = 1'-0" | REF.: 1/A1-1.0 | 1

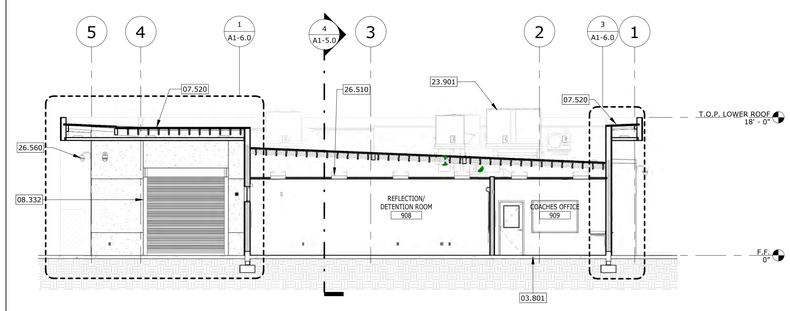

SECTION 2 - WEIGHT ROOM BLDG | SCALE: 1/8" = 1'-0" | REF.: 1/A1-1.0 | 2

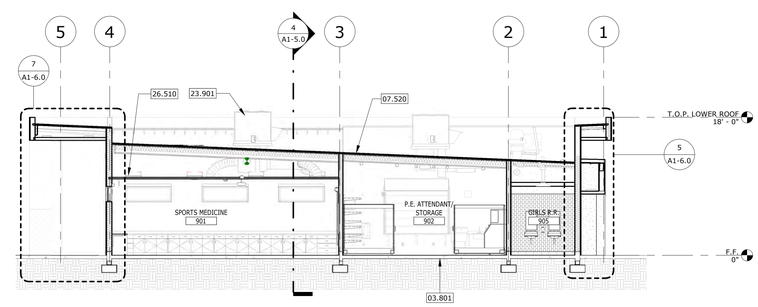

SECTION 3 - WEIGHT ROOM BLDG | SCALE: 1/8" = 1'-0" | REF.: 1/A1-1.0 | 3

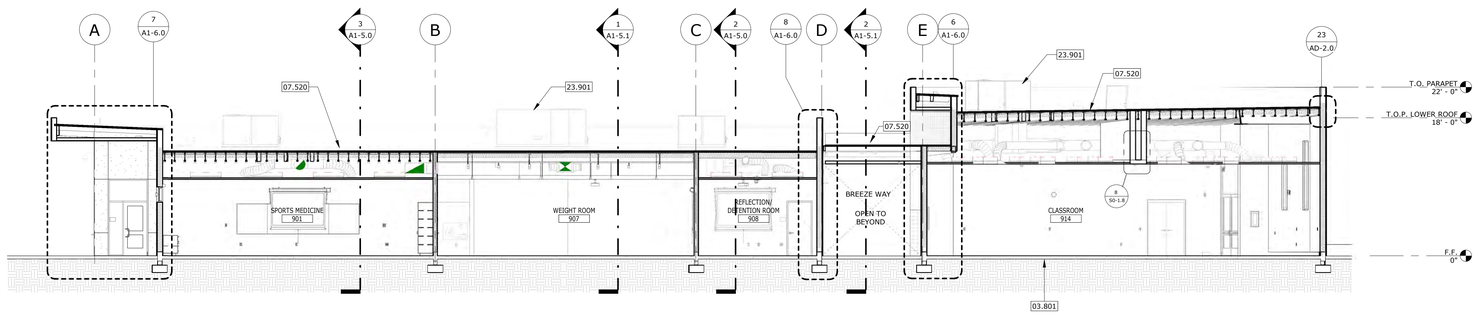

SECTION 4 - WEIGHT ROOM BLDG | SCALE: 1/8" = 1'-0" | REF.: 1/A1-1.0 | 4

STAMPS

LICENSED ARCHITECT — JAMES CLARKE — No. C-31040 — Exp. 12/31/22 — STATE OF CALIFORNIA

IDENTIFICATION STAMP
DIV. OF THE STATE ARCHITECT
APP: 04-120895 INC:
REVIEWED FOR
SS ☑ FLS ☑ ACS ☑
DATE: 06/27/2022
AD:
File No:

CONSULTANT BRANDING

RUHNAU CLARKE ARCHITECTS

GENERAL NOTES - BLDG SECTIONS

1. SLAB ON GRADE: 0'-0" = GLOBAL ELEVATION: 686.00'
2. VERIFY ALL EXTERIOR ROOF OPENINGS & VENTS WITH MECHANICAL, ELECTRICAL, STRUCTURAL & PLUMBING DRAWINGS.
3. FOR TYPICAL ROOF VENT PENETRATION DETAIL SEE DETAILS 11 / AD-3.0 & 12 / AD-3.0
4. PROVIDE R-30 BATT INSULATION UNDERNEATH ROOF STRUCTURE. FOR TYPICAL ROOF CONSTRUCTION ASSEMBLY, SEE DETAIL: 1 / AD-3.0
5. PROVIDE R-19 BATT INSULATION AT ALL EXTERIOR WALLS, U.N.O. GYPSUM BOARD AND INSULATION SHALL EXTEND FULL HEIGHT OF WALL TO UNDERSIDE OF ROOF STRUCTURE
6. ALL EXPOSED STRUCTURE, INCLUDING MECHANICAL & PLUMBING EQUIPMENT TO BE PAINTED. SEE ROOM FINISH SCHEDULE - / ID-1.0
7. REFER TO RELECTED CEILING PLANS FOR SOFFIT TYPES AND HEIGHTS; REFER TO ROOM FINISH SCHEDULE FOR CEILING FINISHES. - / A1-1.0 & - / ID-1.0

KEYNOTES

03.801	CONCRETE SLAB PER (BLDG 900) STRUCTURAL FOUNDATION PLAN, SHEET S1-1.1
07.520	ROOF ASSEMBLY PER 1/AD-3.0
07.711	COPING
07.723	ROOF ACCESS HATCH & LADDER, REFER TO ARCHITECTURAL FLOOR PLAN & DETAIL 6/AD-3.0
08.332	OVERHEAD COILING DOOR, REFER TO ARCHITECTURAL FLOOR PLAN FOR TYPE
23.901	MECHANICAL EQUIPMENTPER MECHANICAL ROOF PLAN & DETAIL 2/AD-3.0
26.510	INTERIOR LIGHTING, PER ELECTRICAL SHEET E2.1
26.560	EXTERIOR LIGHTING, PER ELECTRICAL SHEET E2.1

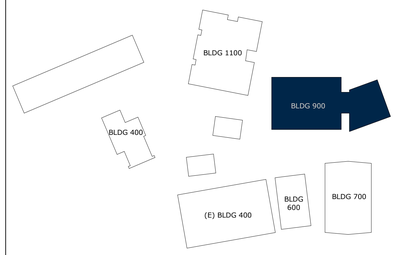

KEY PLAN
NTS

GHS KITCHEN & WEIGHTROOM: 06/13/2022 DSA SUBMITTAL

PROJECT No. :1-30-55
6/21/2022 3:14:39 PM

DRAWN BY: _____ CHECKED BY: _____

ISSUE No.____	DATE_____	DESCRIPTION_____	REVISION No.____	DATE_____	DESCRIPTION_____
ISSUE No.____	DATE_____	DESCRIPTION_____	REVISION No.____	DATE_____	DESCRIPTION_____
ISSUE No.____	DATE_____	DESCRIPTION_____	REVISION No.____	DATE_____	DESCRIPTION_____
ISSUE No.____	DATE_____	DESCRIPTION_____	REVISION No.____	DATE_____	DESCRIPTION_____

RUHNAUCLARKE.COM
3775 TENTH STREET, RIVERSIDE CALIFORNIA 92501 (951) 684-4664 / 5751 PALMER WAY, SUITE C, CARLSBAD CALIFORNIA 92010 (760) 438 5899

GHS KITCHEN & WEIGHTROOM
GROSSMONT HIGH SCHOOL
1100 MURRAY DR, EL CAJON, CA 92020
GROSSMONT UNION HIGH SCHOOL

BUILDING 900
BUILDING ELEVATIONS
& SECTIONS

A1-5.0

1-30-55

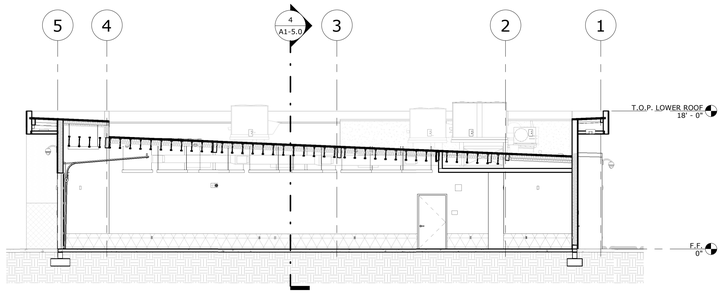

SECTION 5 - WEIGHT ROOM BLDG | SCALE: 1/8" = 1'-0" | REF.: 1/A1-1.0 | 1

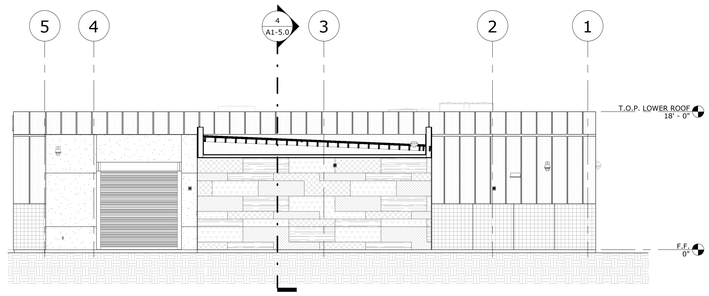

SECTION 6 - WEIGHT ROOM BLDG | SCALE: 1/8" = 1'-0" | REF.: 1/A1-1.0 | 2

STAMPS

LICENSED ARCHITECT
RUHNAU CLARKE
No. C-31040
Exp. 12/31/22
STATE OF CALIFORNIA

IDENTIFICATION STAMP
DIV. OF THE STATE ARCHITECT
APP: 04-120895 INC:
REVIEWED FOR
SS ☑ FLS ☑ ACS ☑
DATE: 06/27/2022

DSA

AGENCY
File No.

CONSULTANT BRANDING

RUHNAU
CLARKE
ARCHITECTS

GENERAL NOTES - BLDG SECTIONS

1. SLAB ON GRADE: 0'-0" = GLOBAL ELEVATION: 686.00'
2. VERIFY ALL EXTERIOR ROOF OPENINGS & VENTS WITH MECHANICAL, ELECTRICAL, STRUCTURAL & PLUMBING DRAWINGS.
3. FOR TYPICAL ROOF VENT PENETRATION DETAIL SEE DETAILS 11/AD-3.0 & 12/AD-3.0
4. PROVIDE R-30 BATT INSULATION UNDERNEATH ROOF STRUCTURE. FOR TYPICAL ROOF CONSTRUCTION ASSEMBLY, SEE DETAIL: 1/AD-3.0
5. PROVIDE R-19 BATT INSULATION AT ALL EXTERIOR WALLS, U.N.O. GYPSUM BOARD AND INSULATION SHALL EXTEND FULL HEIGHT OF WALL TO UNDERSIDE OF ROOF STRUCTURE
6. ALL EXPOSED STRUCTURE, INCLUDING MECHANICAL & PLUMBING EQUIPMENT TO BE PAINTED. SEE ROOM FINISH SCHEDULE -/ID-1.0
7. REFER TO RELECTED CEILING PLANS FOR SOFFIT TYPES AND HEIGHTS; REFER TO ROOM FINISH SCHEDULE FOR CEILING FINISHES. -/A1-1.0 & -/ID-1.0

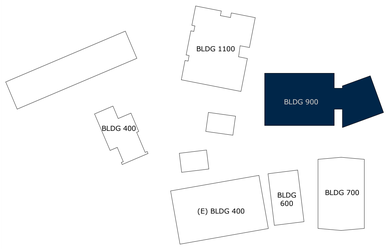

KEY PLAN
NTS

GHS KITCHEN & WEIGHTROOM: 06/13/2022 DSA SUBMITTAL

PROJECT No. :1-30-55
6/21/2022 3:14:45 PM

DRAWN BY: CHECKED BY:

ISSUE No.____ DATE____ DESCRIPTION____
ISSUE No.____ DATE____ DESCRIPTION____
ISSUE No.____ DATE____ DESCRIPTION____
ISSUE No.____ DATE____ DESCRIPTION____

REVISION No.____ DATE____ DESCRIPTION____
REVISION No.____ DATE____ DESCRIPTION____
REVISION No.____ DATE____ DESCRIPTION____
REVISION No.____ DATE____ DESCRIPTION____

RUHNAUCLARKE.COM
3775 TENTH STREET, RIVERSIDE CALIFORNIA 92501 (951) 684-4664 / 5751 PALMER WAY, SUITE C, CARLSBAD CALIFORNIA 92010 (760) 438 5899

GHS KITCHEN & WEIGHTROOM
GROSSMONT HIGH SCHOOL
1100 MURRAY DR, EL CAJON, CA 92020
GROSSMONT UNION HIGH SCHOOL

BUILDING 900
BUILDING SECTIONS

A1-5.1

1-30-55

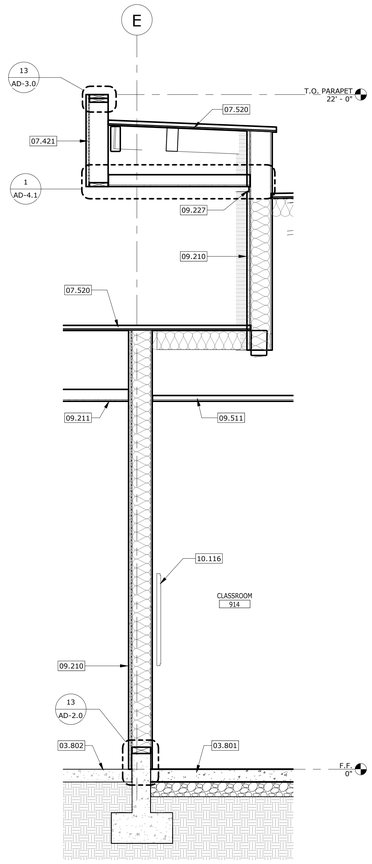

WALL SECTION 6 | SCALE: 1/2" = 1'-0" | REF.: 4/A1-5.0 | 6

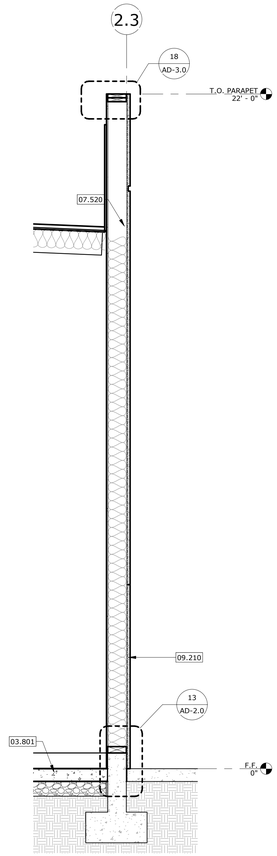

WALL SECTION 2 | SCALE: 1/2" = 1'-0" | REF.: 1/A1-5.0 | 4

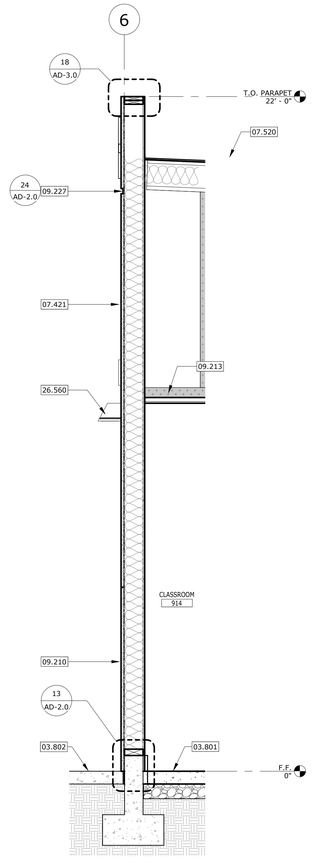

WALL SECTION 1 | SCALE: 1/2" = 1'-0" | REF.: 1/A1-5.0 | 2

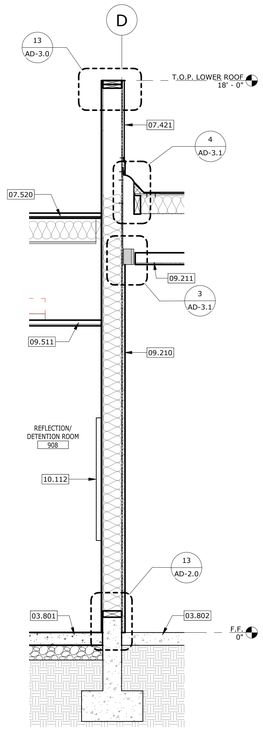

WALL SECTION 8 | SCALE: 1/2" = 1'-0" | REF.: 4/A1-5.0 | 8

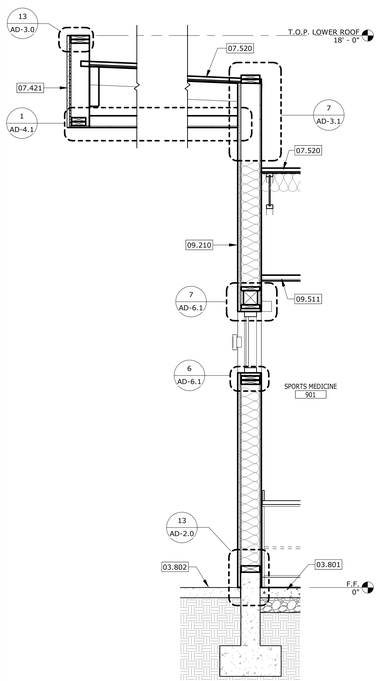

WALL SECTION 7 | SCALE: 1/2" = 1'-0" | REF.: 3/A1-5.0 | 7

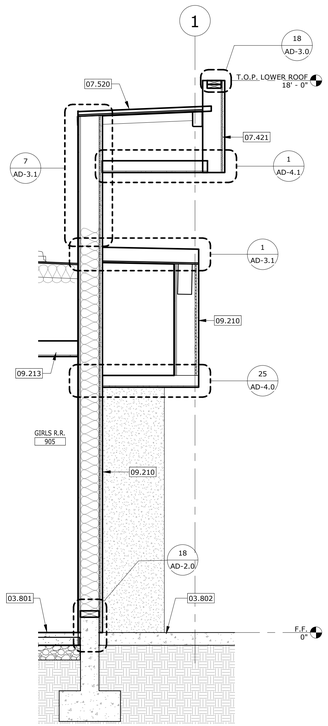

WALL SECTION 5 | SCALE: 1/2" = 1'-0" | REF.: 3/A1-5.0 | 5

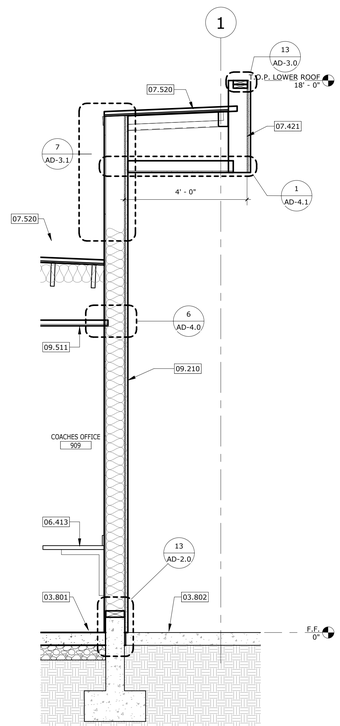

WALL SECTION 4 | SCALE: 1/2" = 1'-0" | REF.: 2/A1-5.0 | 3

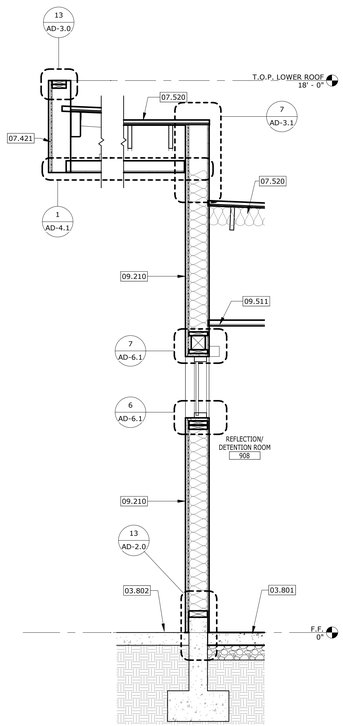

WALL SECTION 3 | SCALE: 1/2" = 1'-0" | REF.: 2/A1-5.0 | 1

STAMPS

LICENSED ARCHITECT
JAMES RUHNAU CLARKE
No. C-31940
Exp. 12/31/22
STATE OF CALIFORNIA

IDENTIFICATION STAMP
DIV. OF THE STATE ARCHITECT
APP: 04-120895 INC:
REVIEWED FOR
SS ☑ FLS ☑ ACS ☑
DATE: 06/27/2022
DSA
AD
File No. 04-120895

CONSULTANT BRANDING

RUHNAU
CLARKE
ARCHITECTS

GENERAL NOTES - BLDG SECTIONS

1. SLAB ON GRADE: 0'-0" = GLOBAL ELEVATION: 686.00'
2. VERIFY ALL EXTERIOR ROOF OPENINGS & VENTS WITH MECHANICAL, ELECTRICAL, STRUCTURAL & PLUMBING DRAWINGS.
3. FOR TYPICAL ROOF VENT PENETRATION DETAIL SEE DETAILS 11/AD-3.0 & 12/AD-3.0
4. PROVIDE R-30 BATT INSULATION UNDERNEATH ROOF STRUCTURE. FOR TYPICAL ROOF CONSTRUCTION ASSEMBLY, SEE DETAIL: 1/AD-3.0
5. PROVIDE R-19 BATT INSULATION AT ALL EXTERIOR WALLS, U.N.O. GYPSUM BOARD AND INSULATION SHALL EXTEND FULL HEIGHT OF WALL TO UNDERSIDE OF ROOF STRUCTURE
6. ALL EXPOSED STRUCTURE, INCLUDING MECHANICAL & PLUMBING EQUIPMENT TO BE PAINTED. SEE ROOM FINISH SCHEDULE -/ID-1.0
7. REFER TO RELECTED CEILING PLANS FOR SOFFIT TYPES AND HEIGHTS; REFER TO ROOM FINISH SCHEDULE FOR CEILING FINISHES. -/A1-1.0 & -/ID-1.0

KEYNOTES

03.801	CONCRETE SLAB PER (BLDG 900) STRUCTURAL FOUNDATION PLAN, SHEET S1-1.1
03.802	CONCRETE PAVING PER SITE PLAN
06.413	PLASTIC LAMINIATE COUNTERTOP WITH BACKSPLASH, OPEN BELOW, SEE DETAIL 14/AD-5.0
07.421	METAL COMPOSITE PANEL, REFER TO ARCHITECTURAL EXTERIOR ELEVATIONS FOR COLOR & FINISH
07.520	ROOF ASSEMBLY PER 1/AD-3.0
09.210	EXTERIOR CEMENT PLASTER ASSEMBLY, SEE DETAIL 23/AD-4.0
09.211	EXTERIOR CEMENT PLASTER CEILING, SEE DETAIL 26/AD-4.0
09.213	FRAMED GYPSUM BOARD ASSEMBLY CEILING, PAINTED PER FIN. SCHED., SEE ID-1.0
09.227	METAL REVEAL, REFER TO DETAIL 9/AD-2.1
09.511	SUSPENDED ACOUSTICAL PANEL CEILING, REFER TO REFLECTED CEILING PLAN
10.112	MARKERBOARD, SEE DETAIL 6/AD-5.0
10.116	WALL MOUNTED MONITOR, SEE DETAIL 10/AD-8.0
26.560	EXTERIOR LIGHTING, PER ELECTRICAL SHEET E2.1

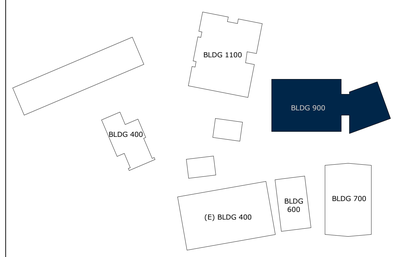

KEY PLAN NTS

GHS KITCHEN & WEIGHTROOM: 06/13/2022 DSA SUBMITTAL

PROJECT No. :1-30-55
6/21/2022 3:14:46 PM

DRAWN BY: CHECKED BY:

ISSUE No.____ DATE____ DESCRIPTION____
ISSUE No.____ DATE____ DESCRIPTION____
ISSUE No.____ DATE____ DESCRIPTION____
ISSUE No.____ DATE____ DESCRIPTION____

REVISION No.____ DATE____ DESCRIPTION____
REVISION No.____ DATE____ DESCRIPTION____
REVISION No.____ DATE____ DESCRIPTION____
REVISION No.____ DATE____ DESCRIPTION____

RUHNAUCLARKE.COM
3775 TENTH STREET, RIVERSIDE CALIFORNIA 92501 (951) 684-4664 / 5751 PALMER WAY, SUITE C, CARLSBAD CALIFORNIA 92010 (760) 438 5899

GHS KITCHEN & WEIGHTROOM
GROSSMONT HIGH SCHOOL
1100 MURRAY DR, EL CAJON, CA 92020
GROSSMONT UNION HIGH SCHOOL

BUILDING 900
WALL SECTIONS

A1-6.0

1-30-55

STAMPS

LICENSED ARCHITECT — RUHNAU CLARKE — No. C-31940 — Exp. 12/31/22 — STATE OF CALIFORNIA

IDENTIFICATION STAMP
DIV. OF THE STATE ARCHITECT
APP: 04-120895 INC:
REVIEWED FOR
SS ☑ FLS ☑ ACS ☑
DATE: 06/27/2022

AGENCY
File No.:

CONSULTANT BRANDING

RUHNAU CLARKE ARCHITECTS

KEYNOTES

09.308	TILE COVE BASE PER FINISH SCHEDULE, SHEET ID-1.0
09.731	CERAMIC WALL TILE, REFER TO FINISH SCHEDULE IN SHEET ID-1.0
09.732	CERAMIC WALL TILE AT RESTROOM, REFER TO FINISH SCHEDULE & RESTROOM TILE PATTERNS IN SHEET ID-1.0
09.921	EXPOSED GYP. BD. TO BE PAINTED, LEVEL 4 FINISH, FOR PAINT COLOR, REFER TO FINISH SCHEDULE IN SHEET ID-1.0
10.211	TOILET PARTITION PER 10/AD-2.1
10.282	REAR GRAB BAR, 36" LONG MIN, PER 16/AD-1.0
10.283	SIDE GRAB BAR, 42" LONG MIN, PER 16/AD-1.0
10.284	TOILET SEAT COVER DISPENSER
10.285	TOILET PAPER DISPENSER, RECESSED
10.286	SANITARY NAPKIN DISPOSAL, RECESSED
10.287	TOILET PAPER DISPENSER, SURFACE MOUNTED
10.288	SANITARY NAPKIN DISPOSAL, SURFACE MOUNTED
10.289	MIRROR
10.290	SOAP DISPENSER
10.291	PAPER TOWEL DISPENSER / WASTE RECEPTACLE, RECESSED
22.149	FLOOR DRAIN PER PLUMBING FLOOR PLAN SHEET 2/P1-2.2 (BLDG 900) / PLUMBING FLOOR PLAN SHEET 1/P2-2.2 (BLDG 400) & F.D. @ TILE DETAIL 9/AD-8.0
22.401	LAVATORY PER PLUMBING FLOOR PLAN SHEET 2/P1-2.2 (BLDG 900) / PLUMBING FLOOR PLAN SHEET 1/P2-2.2 (BLDG 400) & DETAIL 23/AD-1.0
22.402	WATER CLOSET PER PLUMBING FLOOR PLAN SHEET 2/P1-2.2 (BLDG 900) / PLUMBING FLOOR PLAN SHEET 1/P2-2.2 (BLDG 400) & DETAIL 23/AD-1.0
22.403	URINAL PER PLUMBING FLOOR PLAN SHEET 2/P1-2.2 (BLDG 900) / PLUMBING FLOOR PLAN SHEET 1/P2-2.2 (BLDG 400) & DETAIL 23/AD-1.0
22.471	HI-LO DRINKING FOUNTAIN PER PLUMBING FLOOR PLAN 2/P1-2.2 (BLDG 900) & DETAILS 21 & 22/AD-1.0

R.R. FLOOR PLAN LEGEND

NEW 5/8" TYPE "X" GYP. BD. CEILING

T-1 NEW FLOOR TILE SLOPED TO DRAIN

NEW 1'x4' SURFACE MOUNTED LED LIGHT FIXTURE, SEE ELECT. DWS.

NEW EXHAUST, SEE MECH. DWGS.

NEW 24"x30" CEILING ACCESS HATCH

DOOR TAG, SEE SHEET **A1-8.0** FOR DOOR SCHEDULE

101 — INDICATES DOOR NUMBER

30" x 48" ACCESSIBLE CLEAR SPACE — ø 5' - 0" — 60" MIN. DIA. ACCESSIBLE CLEAR SPACE

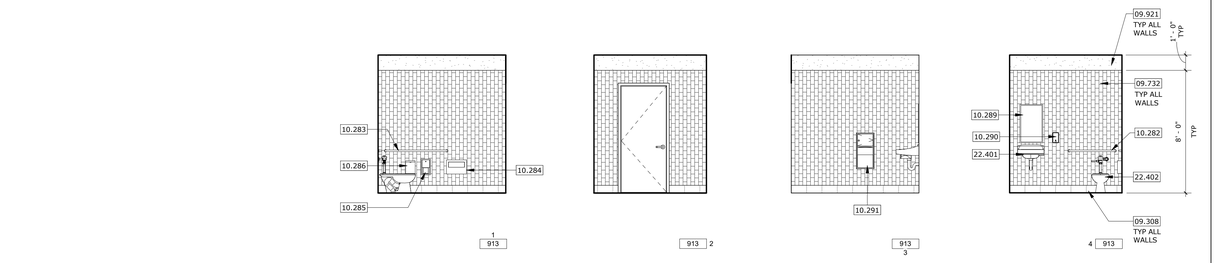

UNISEX RESTROOM #911 - INTERIOR ELEVATIONS — SCALE: 1/4" = 1'-0" — 13

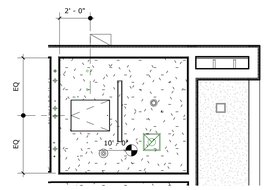

UNISEX #911 - RCP — SCALE: 1/4" = 1'-0" — REF.: 2/A1-1.0 — 8

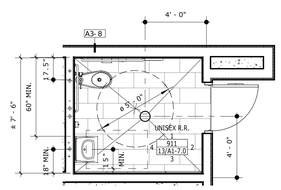

NOTE:
ADULT MOUNTING HEIGHTS. FOR PLUMBING FIXTURE MOUNTING HEIGHTS, ACCESSORY MOUNTING HEIGHTS & ACCESSORY FLOOR PLAN LOCATING DIMENSIONS, REFER TO DETAIL: 23/AD-1.0

UNISEX #911-ENLARGED PLAN — SCALE: 1/4" = 1'-0" — 3

R.R. CEILING PLAN LEGEND

EXTERIOR PLASTER CEILING SYSTEM — 25/AD-4.0

GYPSUM BOARD CEILING SYSTEM

8' - 0" — CEILING HEIGHT SPOT ELEVATION

24"x30" CEILING ACCESS PANEL, SEE DETAIL 29/AD-4.0

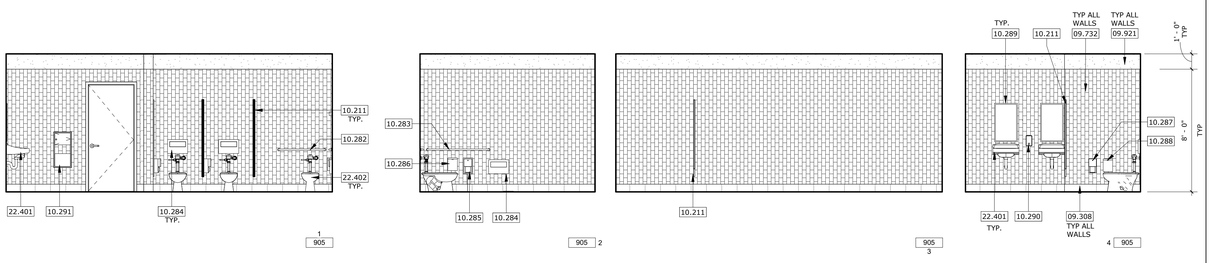

GIRLS RESTROOM #905 - INTERIOR ELEVATIONS — SCALE: 1/4" = 1'-0" — 12

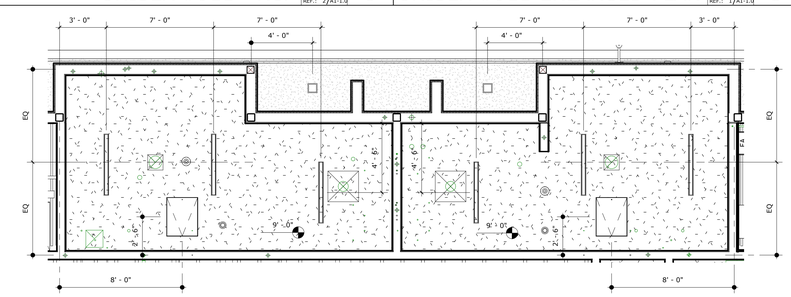

GIRLS RESTROOM #905 - REFLECTED CEILING PLAN — SCALE: 1/4" = 1'-0" — REF.: 2/A1-1.0 — 2

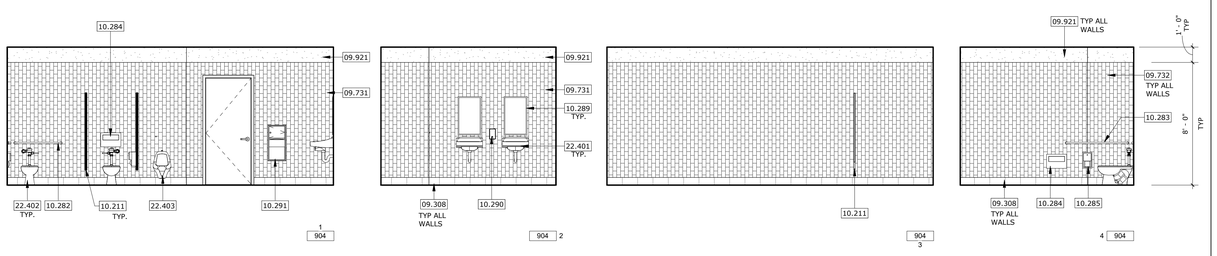

BOYS RESTROOM #904 - INTERIOR ELEVATIONS — SCALE: 1/4" = 1'-0" — 11

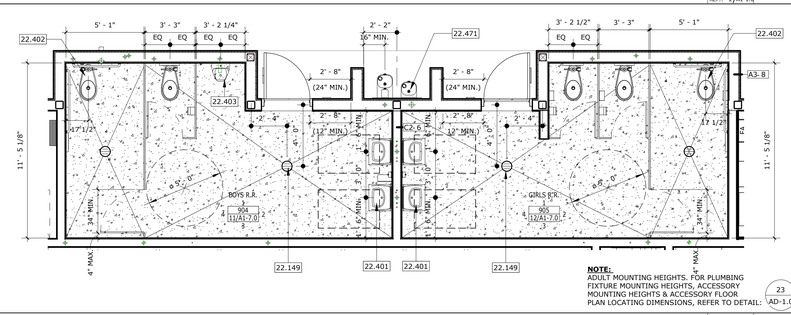

NOTE:
ADULT MOUNTING HEIGHTS. FOR PLUMBING FIXTURE MOUNTING HEIGHTS, ACCESSORY MOUNTING HEIGHTS & ACCESSORY FLOOR PLAN LOCATING DIMENSIONS, REFER TO DETAIL: 23/AD-1.0

BOYS RESTROOM #904 - ENLARGED PLANS — SCALE: 1/4" = 1'-0" — REF.: 1/A1-1.0 — 1

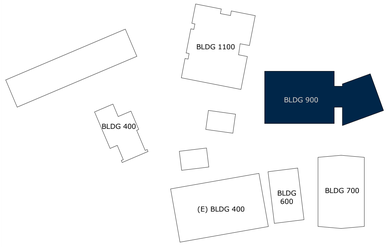

KEY PLAN — NTS.

GHS KITCHEN & WEIGHTROOM: 06/13/2022 DSA SUBMITTAL

PROJECT No. :1-30-55
6/21/2022 3:14:50 PM

DRAWN BY: CHECKED BY:

ISSUE No.	DATE	DESCRIPTION	REVISION No.	DATE	DESCRIPTION
ISSUE No.	DATE	DESCRIPTION	REVISION No.	DATE	DESCRIPTION
ISSUE No.	DATE	DESCRIPTION	REVISION No.	DATE	DESCRIPTION
ISSUE No.	DATE	DESCRIPTION	REVISION No.	DATE	DESCRIPTION

RUHNAUCLARKE.COM
3775 TENTH STREET, RIVERSIDE CALIFORNIA 92501 (951) 684 4664 / 5751 PALMER WAY, SUITE C, CARLSBAD CALIFORNIA 92010 (760) 438 5899

GHS KITCHEN & WEIGHTROOM
GROSSMONT HIGH SCHOOL
1100 MURRAY DR, EL CAJON, CA 92020
GROSSMONT UNION HIGH SCHOOL

BUILDING 900
ENLARGED RESTROOM
PLANS & ELEVATIONS

A1-7.0

1-30-55

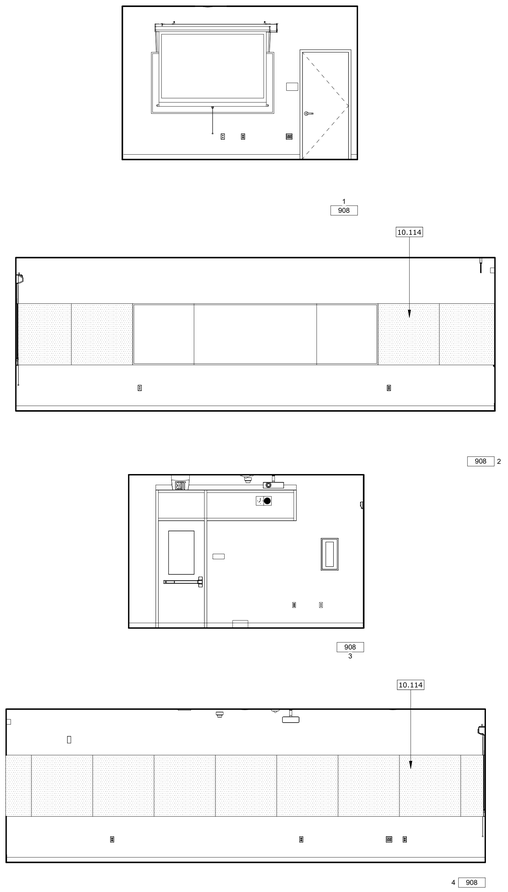

REFLECTION/ DETENTION RM #908 - INTERIOR ELEVATIONS

SCALE: 1/4" = 1'-0" | REF: / | 3

CLASSROOM #914 - INTERIOR ELEVATIONS

SCALE: 1/4" = 1'-0" | 1

STAMPS

LICENSED ARCHITECT RUHNAU CLARKE No. C-31040 Exp. 12/31/22 STATE OF CALIFORNIA

IDENTIFICATION STAMP
DIV. OF THE STATE ARCHITECT
APP: 04-120895 INC:
REVIEWED FOR
SS ☑ FLS ☑ ACS ☑
DATE: 06/27/2022

AGENCY
File No.

CONSULTANT BRANDING

RUHNAU CLARKE ARCHITECTS

KEYNOTES

06.404	UPPER CASEWORK
06.407	FULL HEIGHT CABINET WITH DOORS, SEE DETAIL 11/AD-5.0
06.411	STAINLESS STEEL COUNTERTOP WITHOUT BACKSPLASH, OPEN BELOW AT SLIDING WINDOW
06.413	PLASTIC LAMINIATE COUNTERTOP WITH BACKSPLASH, OPEN BELOW, SEE DETAIL 14/AD-5.0
08.110	DOOR AND FRAME, REFER TO ARCHITECTURAL FLOOR PLAN FOR TYPE
08.332	OVERHEAD COILING DOOR, REFER TO ARCHITECTURAL FLOOR PLAN FOR TYPE
08.410	STOREFRONT ASSEMBLY, REFER TO ARCHITECTURAL FLOOR PLAN FOR TYPE
08.510	WINDOW, REFER TO ARCHITECTURAL FLOOR PLAN FOR TYPE
09.921	EXPOSED GYP. BD. TO BE PAINTED, LEVEL 4 FINISH, FOR PAINT COLOR, REFER TO FINISH SCHEDULE IN SHEET ID-1.0
10.114	TACKABLE WALL PANEL SYSTEM, SEE DETAIL 1/AD-8.0
10.443	RECESSED FIRE EXTINGUISHER CABINET PER DETAIL 2/AD-8.0
10.561	METAL STORAGE SHELVING PER SPECS, PROVIDE FULL HEIGHT P-LAM SIDE PANELS AT ALL EXPOSED SIDES, REFER TO DETAIL 2/AD-5.0
10.564	MOBILE STORAGE SYSTEM PER SPEC SECTION 10 56 23
11.311	ACCESSIBLE FRONT LOAD WASHER, O.F.C.I., REFER TO DETAIL 18/AD-8.0
11.312	ACCESSIBLE FRONT LOAD DRYER, O.F.C.I., REFER TO DETAIL 18/AD-8.0
11.470	ICE MAKER MACHINE (O.F.C.I.) W/ ACCESSIBLE FRONT OPENING BIN, SEE SPECS
11.524	WALL MOUNTED MONITOR (O.F.C.I.) PER DETAIL 10/AD-8.0
22.405	SINK PER PLUMBING FLOOR PLAN SHEET 2/P1-2.2 (BLDG 900) / PLUMBING FLOOR PLAN SHEET 1/P2-2.2 (BLDG 400) & DETAIL 4/AD-5.0

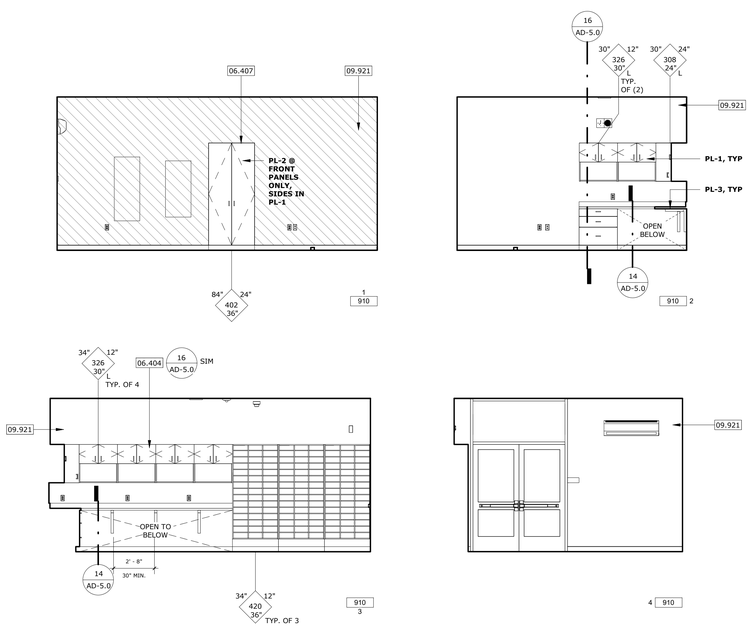

PUBLICATIONS ROOM #910 - INTERIOR ELEVATIONS

SCALE: 1/4" = 1'-0" | 4

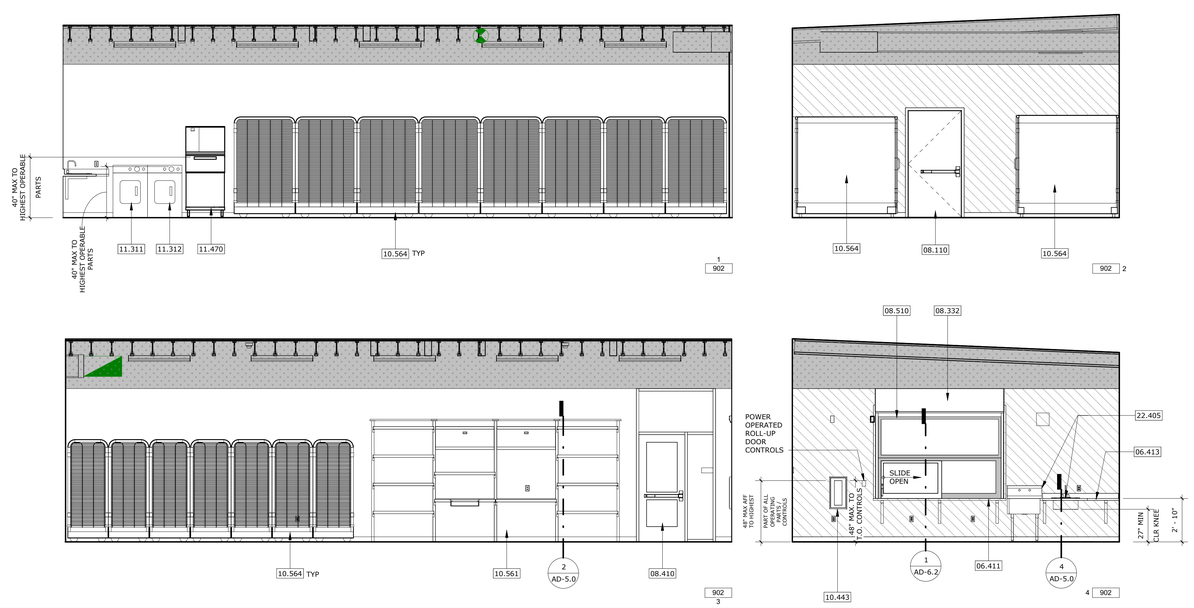

P.E. ATTENDANT/ STORAGE #902- INTERIOR ELEVATIONS

SCALE: 1/4" = 1'-0" | 2

INTERIOR ELEVATIONS LEGEND

PAINT
- P-1
- P-2
- P-4
- P-5

TILING
- T-3
- T-6

GRAPHIC FILM
- GF-1
- GF-2

FIBERGLASS REINFORCED PANELS
- FRP-1

TACKABLE WALL PANELS
- TWP-1
- TWP-2

NOTE:
REFER TO COLORS, MATERIALS AND FINISHES LEGEND FOR ADDITIONAL INFORMATION ID-1.0

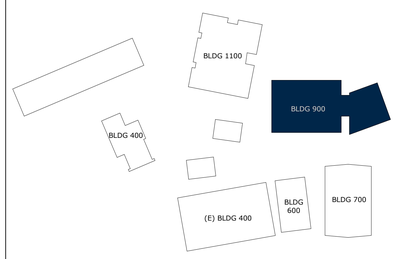

KEY PLAN NTS.

GHS KITCHEN & WEIGHTROOM: 06/13/2022 DSA SUBMITTAL

PROJECT No. :1-30-55
6/21/2022 3:15:05 PM

DRAWN BY: CHECKED BY:

ISSUE No.	DATE	DESCRIPTION	REVISION No.	DATE	DESCRIPTION
ISSUE No.	DATE	DESCRIPTION	REVISION No.	DATE	DESCRIPTION
ISSUE No.	DATE	DESCRIPTION	REVISION No.	DATE	DESCRIPTION
ISSUE No.	DATE	DESCRIPTION	REVISION No.	DATE	DESCRIPTION

RUHNAUCLARKE.COM
3775 TENTH STREET, RIVERSIDE CALIFORNIA 92501 (951) 684 4664 / 5751 PALMER WAY, SUITE C, CARLSBAD CALIFORNIA 92010 (760) 438 5899

GHS KITCHEN & WEIGHTROOM
GROSSMONT HIGH SCHOOL
1100 MURRAY DR, EL CAJON, CA 92020
GROSSMONT UNION HIGH SCHOOL

BUILDING 900
INTERIOR ELEVATIONS

A1-7.1

1-30-55

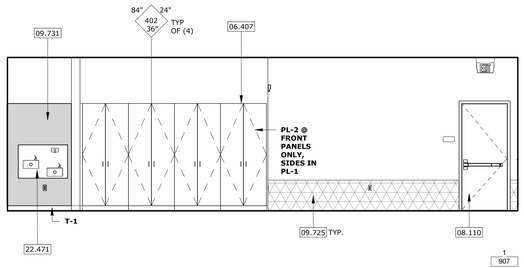

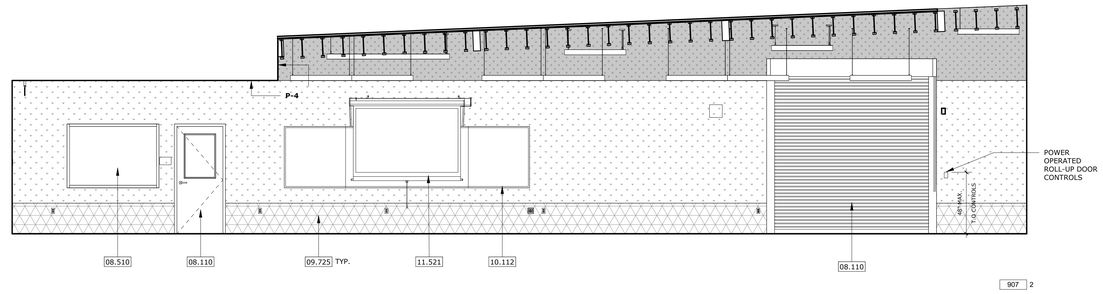

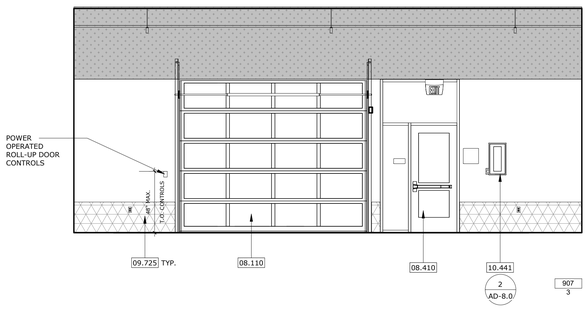

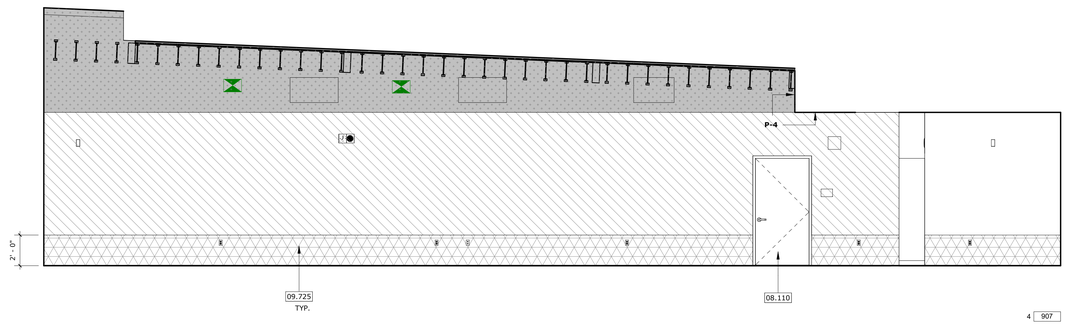

WEIGHT ROOM #907 - INTERIOR ELEVATIONS | SCALE: AS NOTED | 1

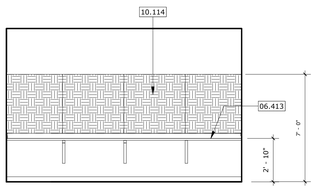

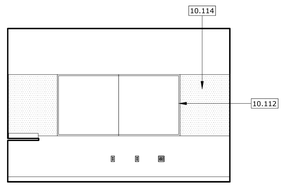

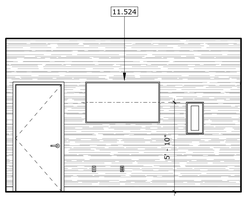

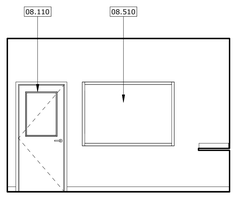

COACHES OFFICE #909 - INTERIOR ELEVATIONS | SCALE: AS NOTED | 3

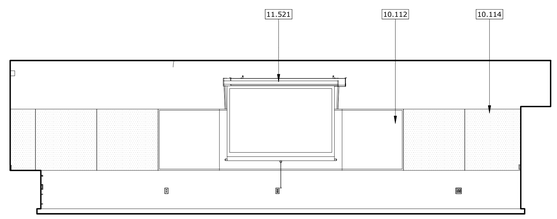

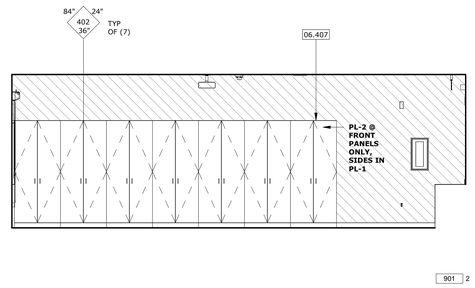

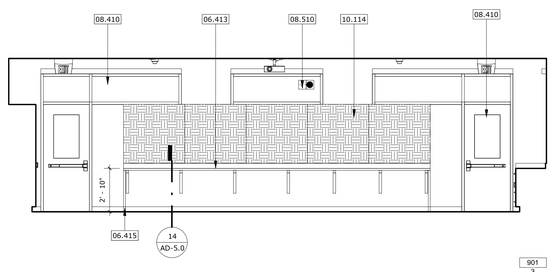

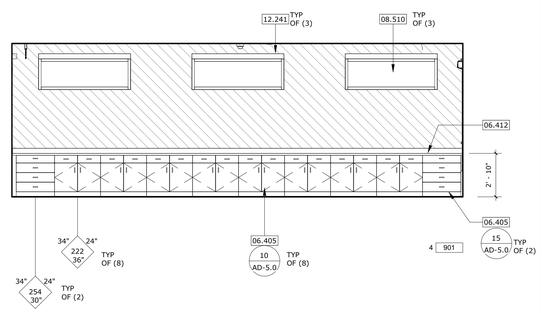

SPORTS MEDICINE #901 - INTERIOR ELEVATIONS | SCALE: AS NOTED | 2

STAMPS

LICENSED ARCHITECT
RUHNAU CLARKE
No. C-31949
Exp. 12/31/22
STATE OF CALIFORNIA

IDENTIFICATION STAMP
DIV. OF THE STATE ARCHITECT
APP: 04-120895 INC:
REVIEWED FOR
SS ☑ FLS ☑ ACS ☑
DATE: 06/27/2022
DSA
AS
File No.

CONSULTANT BRANDING

RUHNAU
CLARKE
ARCHITECTS

KEYNOTES

06.405	BASE CABINET
06.407	FULL HEIGHT CABINET WITH DOORS, SEE DETAIL 11/AD-5.0
06.412	PLASTIC LAMINIATE COUNTERTOP WITH BACKSPLASH AT BASE CABINET, SEE ELEVATIONS FOR CASEWORK BELOW
06.413	PLASTIC LAMINIATE COUNTERTOP WITH BACKSPLASH, OPEN BELOW, SEE DETAIL 14/AD-5.0
06.415	PLASTIC LAMINIATE FILLER PANEL
08.110	DOOR AND FRAME, REFER TO ARCHITECTURAL FLOOR PLAN FOR TYPE
08.410	STOREFRONT ASSEMBLY, REFER TO ARCHITECTURAL FLOOR PLAN FOR TYPE
08.510	WINDOW, REFER TO ARCHITECTURAL FLOOR PLAN FOR TYPE
09.725	PROTECTIVE METAL WALL PANELING, ALUMINUM DIAMOND TREAD
09.731	CERAMIC WALL TILE, REFER TO FINISH SCHEDULE IN SHEET ID-1.0
10.112	MARKERBOARD, SEE DETAIL 6/AD-5.0
10.114	TACKABLE WALL PANEL SYSTEM, SEE DETAIL 1/AD-8.0
10.441	FIRE EXTINGUISHER CABINET
11.521	PROJECTION SCREEN PER 15/AD-8.0
11.524	WALL MOUNTED MONITOR (O.F.C.I.) PER DETAIL 10/AD-8.0
12.241	ROLLER WINDOW SHADE, SEE DETAIL 4/AD-6.1
22.471	HI-LO DRINKING FOUNTAIN PER PLUMBING FLOOR PLAN 2/P1-2.2 (BLDG 900) & DETAILS 21 & 22/AD-1.0

INTERIOR ELEVATIONS LEGEND

PAINT
- P-1
- P-2
- P-4
- P-5

TILING
- T-3
- T-6

GRAPHIC FILM
- GF-1
- GF-2

FIBERGLASS REINFORCED PANELS
- FRP-1

TACKABLE WALL PANELS
- TWP-1
- TWP-2

NOTE:
REFER TO COLORS, MATERIALS AND FINISHES LEGEND FOR ADDITIONAL INFORMATION ID-1.0

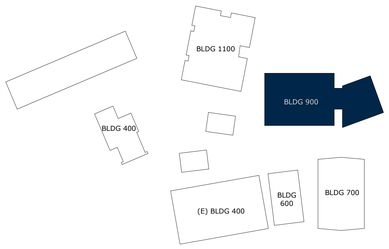

KEY PLAN NTS

GHS KITCHEN & WEIGHTROOM: 06/13/2022 DSA SUBMITTAL

PROJECT No. :1-30-55
6/21/2022 3:15:16 PM

DRAWN BY: _____ CHECKED BY: _____

ISSUE No.____	DATE_____	DESCRIPTION_____	REVISION No.____	DATE_____	DESCRIPTION_____
ISSUE No.____	DATE_____	DESCRIPTION_____	REVISION No.____	DATE_____	DESCRIPTION_____
ISSUE No.____	DATE_____	DESCRIPTION_____	REVISION No.____	DATE_____	DESCRIPTION_____
ISSUE No.____	DATE_____	DESCRIPTION_____	REVISION No.____	DATE_____	DESCRIPTION_____

RUHNAUCLARKE.COM
3775 TENTH STREET, RIVERSIDE CALIFORNIA 92501 (951) 684 4664 / 5751 PALMER WAY, SUITE C, CARLSBAD CALIFORNIA 92010 (760) 438 5899

GHS KITCHEN & WEIGHTROOM
GROSSMONT HIGH SCHOOL
1100 MURRAY DR, EL CAJON, CA 92020
GROSSMONT UNION HIGH SCHOOL

INTERIOR ELEVATIONS | **A1-7.2**

1-30-55

DOOR SCHEDULE - WEIGHT ROOM

DOOR No.	ROOM No.	ROOM NAME	DOOR TYPE	FRAME TYPE	DOOR MEASUREMENTS WIDTH	HEIGHT	THICKNESS	HDWR GROUP	LOCKABLE FROM THE INSIDE	PANIC HDWR	MATERIAL	DOOR FINISH	DOOR COLOR	FRAME MATERIAL	FRAME FINISH	FRAME COLOR	DETAILS HEAD	JAMB	SILL	FIRE RATING	STC RATING	REMARKS	Lock Type
901A	901	SPORTS MEDICINE	F		3' - 0"	7' - 0"	1 3/4"	08	YES	YES	ALUM/GLASS	FF	ALUM-1	ALUM	FF	ALUM-1	15/AD-6.1	19/AD-6.1	11/AD-6.1				
901B	901	SPORTS MEDICINE	F		3' - 0"	7' - 0"	1 3/4"	08	YES	YES	ALUM/GLASS	FF	ALUM-1	ALUM	FF	ALUM-1	15/AD-6.1	19/AD-6.1	11/AD-6.1				
902A	902	P.E. ATTENDANT/ STORAGE	H		3' - 0"	7' - 0"	1 3/4"	08			ALUM/GLASS	FF	ALUM-1	ALUM	FF	ALUM-1	15/AD-6.1	14B19/AD-6.1	11/AD-6.1				
902B	902	P.E. ATTENDANT/ STORAGE	A		3' - 6"	7' - 0"	1 3/4"	09			HM	PSG	P-6	HM	PSG	P-6	20/AD-6.0	19/AD-6.0	26A/AD-6.0	-	-		
903	903	ELEC	A		3' - 0"	7' - 0"	1 3/4"	10			HM	PSG	P-6	HM	PSG	P-6	17/AD-6.0	18/AD-6.0	6/AD-6.0	-	-		
904	904	BOYS R.R.	A		3' - 0"	7' - 0"	1 3/4"	11			HM	PSG	P-6	HM	PSG	P-6	12/AD-6.0	13/AD-6.0	11/AD-6.0	-	-	UNDERCUT DOOR PER MECHANICAL SHEET M1-2.1	
905	905	GIRLS R.R.	A		3' - 0"	7' - 0"	1 3/4"	11			HM	PSG	P-6	HM	PSG	P-6	12/AD-6.0	13/AD-6.0	11/AD-6.0	-	-	UNDERCUT DOOR PER MECHANICAL SHEET M1-2.1	
906	906	DATA	A		3' - 0"	7' - 0"	1 3/4"	05			HM	PSG	P-6	HM	PSG	P-6	17/AD-6.0	18/AD-6.0	6/AD-6.0	-	-		
907	907	WEIGHT ROOM	A		3' - 0"	7' - 0"	1 3/4"	06	YES	YES	HM	PSG	P-6	HM	PSG	P-6	17/AD-6.0	18/AD-6.0	16/AD-6.0	-	-		
907A	907	WEIGHT ROOM	H		3' - 0"	7' - 0"	1 3/4"	08	YES	YES	ALUM/GLASS	FF	ALUM-1	ALUM	FF	ALUM-1	15/AD-6.1	14B19/AD-6.1	11/AD-6.1 SIM				
907B	907	WEIGHT ROOM	D		12' - 0"	9' - 11"	1 3/4"	18			ALUM/GLASS	FF	ALUM-2	ALUM	FF	ALUM-2	20/AD-6.2	26/AD-6.2	11/AD-6.1 SIM				
907C	907	WEIGHT ROOM	G		11' - 1"	11' - 5"	0"	18			STL	FF	STL-1	STL	FF	STL-1	9/AD-6.0	4/AD-6.0	16/AD-6.0	-			
908	908	REFLECTION/ DETENTION ROOM	F		3' - 0"	7' - 0"	1 3/4"	21	YES	YES	ALUM/GLASS	FF	ALUM-1	ALUM	FF	ALUM-1	15/AD-6.1	19/AD-6.1	11/AD-6.1				
909A	909	COACHES OFFICE	F		3' - 0"	7' - 0"	1 3/4"	12	YES		HM	PSG	P-6	HM	PSG	P-6	20/AD-6.0	19/AD-6.0	26B/AD-6.0				
909B	909	COACHES OFFICE	A		3' - 0"	7' - 0"	1 3/4"	12	YES		HM	PSG	P-6	HM	PSG	P-6	20/AD-6.0	19/AD-6.0	26D/AD-6.0	-	-		
910	910	PUBLICATIONS	C		6' - 0"	7' - 0"	2"	13	YES		ALUM/GLASS	FF	ALUM-1	ALUM	FF	ALUM-1	15/AD-6.1	14 /AD-6.1	11/AD-6.1				
911	911	UNISEX R.R.	A		3' - 0"	7' - 0"	1 3/4"	14			HM	PSG	P-6	HM	PSG	P-6	12/AD-6.0	13/AD-6.0	11/AD-6.0	-	-		
912	912	CUSTODIAL	A		3' - 0"	7' - 0"	1 3/4"	05			HM	PSG	P-6	HM	PSG	P-6	17/AD-6.0	18/AD-6.0	6/AD-6.0	-	-		
913	913	STORAGE	E		5' - 0"	7' - 0"	1 3/4"				HM	PSG	P-6	HM	PSG	P-6							
914	914	CLASSROOM	C		6' - 0"	8' - 0"	2"	15	YES	YES	ALUM/GLASS	FF	ALUM-1	ALUM	FF	ALUM-1	15/AD-6.1	19/AD-6.1	11/AD-6.1				
914	914	CLASSROOM	C		6' - 2"	8' - 0"	2"	16	YES	YES	ALUM/GLASS	FF	ALUM-1	ALUM	FF	ALUM-1	17/AD-6.0	18/AD-6.0	6/AD-6.0				

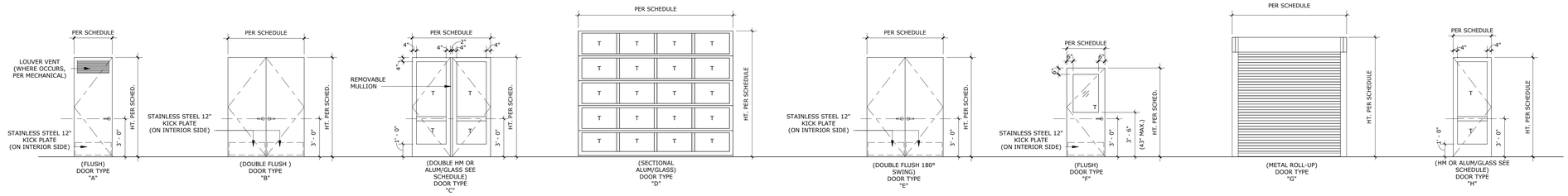

DOOR TYPES 1

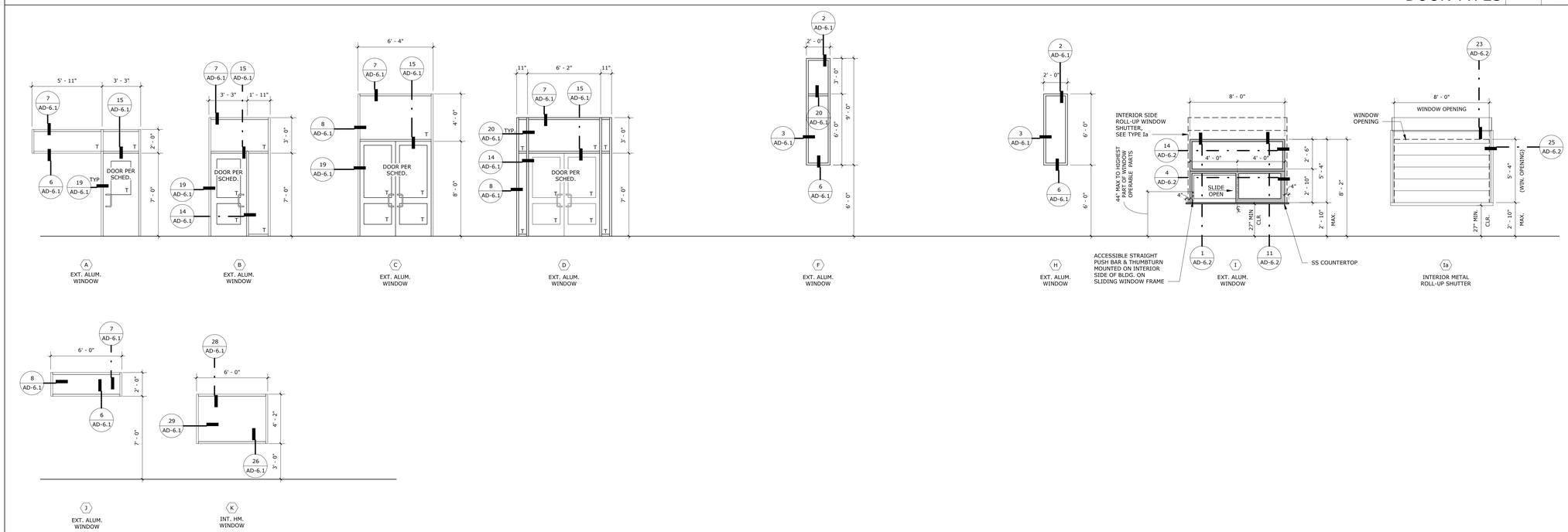

WINDOW TYPES 2

GENERAL NOTES

1. SEE SHEET **AD-6.0 & AD-6.1** FOR HOLLOW METAL FRAME DETAILS
2. SET DOORS ADJACENT TO WALLS A MIN. OF 4" AWAY FROM WALL U.N.O.
3. ALL GLAZING IN DOORS, AND WINDOWS BELOW 8'-0" A.F.F., ARE TEMPERED OR AS REQUIRED BY SECTION 2406 OF THE 2019 CBC
4. PROVIDE DOOR STOPS AT ALL INTERIOR DOORS. PROVIDE BACKING PLATE PER DETAIL 9/S0-1.6
5. ALL EXTERIOR DOORS ARE TO SWING OUT AND OPEN AT A MIN. OF 110 DEGREES FROM ITS CLOSED POSITION WHERE POSSIBLE, U.N.O.
   -EXCEPTION: WHERE TACTILE SIGNAGE IS LOCATED ON HINGE SIDE OF DOOR, DOORS TO HAVE A 90 DEGREE SWING LIMIT
6. ALL EXTERIOR DOORS SHALL HAVE A POLYSTYRENE CORE (THERMAL RESISTANCE)
7. PROVIDE AIR SEALS/WEATHER STRIPPING AT ALL EXTERIOR DOORS TO CONDITIONED SPACES
8. ALL FLOOR MATERIAL CHANGE SHALL BE LOCATED UNDER THE CENTERLINE OF THE DOOR WHERE OCCURS, TYP.
9. ALL EXTERIOR DOORS SHALL BE OPERABLE FROM THE INTERIOR WITHOUT THE USE OF A KEY OR ANY SPECIAL KNOWLEDGE OR EFFORT. DEAD BOLTS ARE ONLY PERMITTED WHEN OPERABLE WITH SINGLE EFFORT LEVER TYPE HARDWARE
10. HAND ACTIVATED DOOR OPENING HARDWARE SHALL BE MOUNTED BETWEEN 34"-44" A.F.F.
11. ALL DOORS SHALL BE LOCKABLE FROM INSIDE
12. PER SECTION 1010.1.10 IN THE CBC 2019, DOOR SERVING ROOMS OR SPACES WITH AN OCCUPANT LOAD OF 50 OR MORE ARE REQUIRED TO HAVE PANIC HARDWARE OR FIRE EXIT HARDWARE
13. PER CBC 2019 11B-404.2.5, THRESHOLDS SHALL BE 1/2" HIGH MAX. W/ 1:2 BEVELED, SEE DETAILS 26/AD-6.0 & 6/AD-6.0
14. THE BOTTOM 10" OF ALL DOORS EXTENDING THE FULL WIDTH SHALL HAVE A SMOOTH UNINTERRUPTED SURFACE TO ALLOW THE DOOR TO BE OPENED BY A WHEELCHAIR FOOTREST WITHOUT CREATING A TRAP OR HAZARDOUS CONDITION. CBC 2019 11B-404.2.10
15. THE FORCE FOR PUSHING OR PULLING OPEN A DOOR SHALL BE AS FOLLOWS: CBC 2019 SECTION 11B-404.2.9

    - INTERIOR HINGED DOORS, SLIDING OR FOLDING DOORS, AND EXTERIOR HINGED DOORS: 5 POUNDS (22.2 N) MAXIMUM. REQUIRED FIRE DOORS: THE MINIMUM OPENING FORCE ALLOWABLE BY THE DSA AUTHORITY, NOT TO EXCEED 15 POUNDS (66.7 N). THESE FORCES DO NOT APPLY TO THE FORCE REQUIRED TP RETRACT LATCH BOLTS OR DISENGAGE OTHER DEVICES THAT HOLD THE DOOR IN A CLOSED POSITION.

    - THE FORCE REQUIRED FOR ACTIVATING ANY OPERABLE PARTS, SUCH AS LEVER HARDWARE, OR DISENGAGING OTHER DEVICES SHALL BE 5 POUNDS (22.2 N) MAXIMUM TO COMPLY WITH CBC SECTION 11B-309.4
16. REFER TO SPECIFICATION SECTION **08 71 00** FOR DOOR HARDWARE INFORMATION

ABBREVIATIONS

ALUM	ALUMINUM
AN	ANODOZIED
HM	HOLLOW METAL
HC	HOLLOW CORE
GALV.	GALVANIZED
STL	STEEL
PSG	PAINT: SEMI-GLOSS

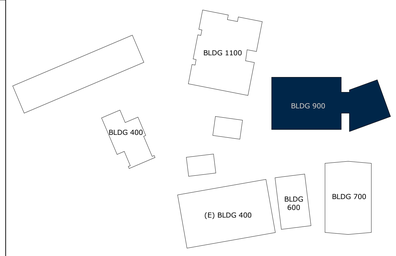

KEY PLAN NTS

STAMPS

LICENSED ARCHITECT JAMES CLARKE No. C-31940 Exp. 12/31/22 STATE OF CALIFORNIA

IDENTIFICATION STAMP
DIV. OF THE STATE ARCHITECT
APP: 04-120895 INC:
REVIEWED FOR
SS ☑ FLS ☑ ACS ☑
DATE: 06/27/2022
ACTIVE
File No. 04-120895

CONSULTANT BRANDING

RUHNAU CLARKE ARCHITECTS

GHS KITCHEN & WEIGHTROOM: 06/13/2022 DSA SUBMITTAL

PROJECT No. :1-30-55
6/21/2022 3:15:20 PM

DRAWN BY: CHECKED BY:
ISSUE No.____ DATE____ DESCRIPTION____
REVISION No.____ DATE____ DESCRIPTION____

RUHNAUCLARKE.COM

3775 TENTH STREET, RIVERSIDE CALIFORNIA 92501 (951) 684 4664 / 5751 PALMER WAY, SUITE C, CARLSBAD CALIFORNIA 92010 (760) 438 5899

GHS KITCHEN & WEIGHTROOM
GROSSMONT HIGH SCHOOL
1100 MURRAY DR, EL CAJON, CA 92020
GROSSMONT UNION HIGH SCHOOL

BUILDING 900
DOOR & WINDOW
SCHEDULE

A1-8.0

1-30-55

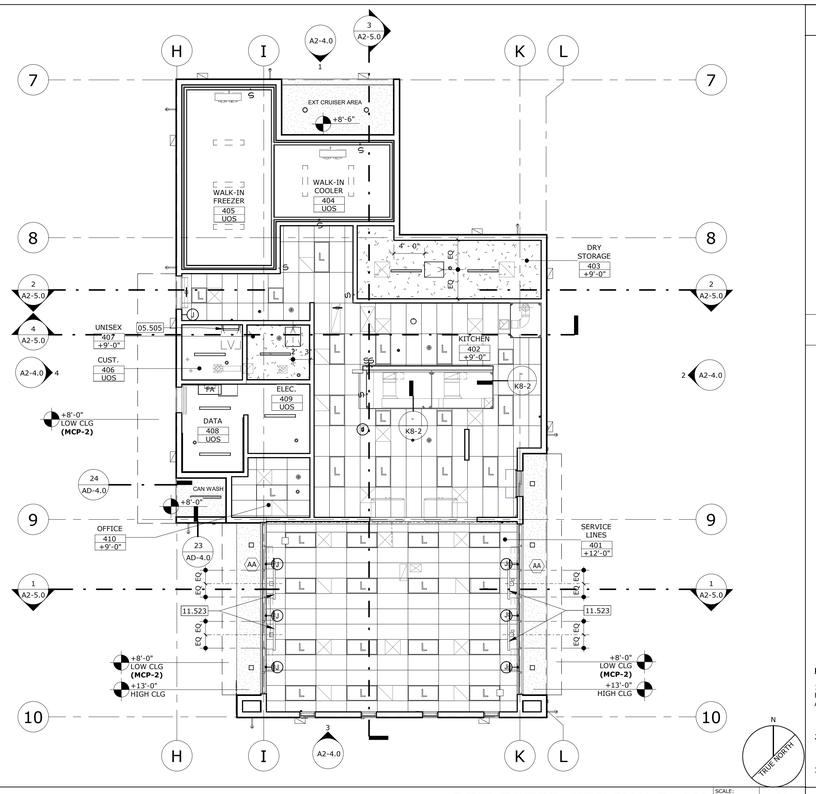

REFLECTED CEILING PLAN

SCALE: 1/8" = 1'-0" | 2

CEILING PLAN GENERAL NOTES

1. ALL LIGHT FIXTURES TO BE CENTERED IN SPACE, U.N.O.
2. ALL CEILING HEIGHTS ARE RELATIVE TO THE FINISH FLOOR DIRECTLY BENEATH.
3. ACOUSTICAL CEILING TILES AND GRID TO BE CENTERED IN ROOM. SEE SHEET (1 / AD-4.0) FOR SUSPENDED CEILING SEISMIC BRACING DETAILS AND TRAPEZE DETAILS
4. ALL EXPOSED STRUCTURE, INCLUDING MECHANICAL & PLUMBING EQUIPMENT TO BE PAINTED PER CMF ON SHEET (- / ID-1.0)
5. ALL MECHANICAL, ELECTRICAL AND PLUMBING EQUIPMENT TO BE HELD AS TIGHT AS POSSIBLE TO CEILING STRUCTURE
6. ALL CONDUIT IN EXPOSED AREAS WHERE CEILING STRUCTURE IS EXPOSED CAN ONLY PENETRATE WALLS AT ROOF / FLOOR DECK
7. REFER TO ELECTRICAL & MECHANICAL DRAWINGS FOR CEILING COMPONENT CALLOUTS AND FIXTURE TYPES
8. PAINT ALL SUPPLY & RETURNS OF ALL ACCENT PAINTED CEILING AREAS

CEILING PLAN LEGEND

- EXTERIOR PLASTER CEILING SYSTEM PER DET: (25 / AD-4.0)
- GYPSUM BOARD CEILING SYSTEM, PER DETAIL: (27 / AD-4.0)
- ACT-2: 2'-0" x 4'-0" SUSPENDED TEE BAR ACOUSTICAL CEILING, SEE DETAIL: (1 / AD-4.0)
- 24"x30" CEILING ACCESS PANEL, SEE DETAIL : (29 / AD-4.0)
- ROOF ACCESS HATCH & LADDER, SEE DETAIL: (6 / AD-3.0)
- 8' - 0" CEILING HEIGHT SPOT ELEVATION
- 6" DIA. LIGHT PER ELEC. LIGHTING FLOOR PLAN
- 6" SQ. DOWNLIGHT PER ELEC. LIGHTING FLOOR PLAN
- WALL MOUNTED SCONCE LIGHT FIXTURE PER ELEC. LIGHTING FLOOR PLAN
- 2'-0" x 4'-0" T-GRID RECESSED MOUNT FIXTURE PER ELEC. LIGHTING FLOOR PLAN
- 2'-0" x 2'-0" T-GRID RECESSED MOUNT FIXTURE PER ELEC. LIGHTING FLOOR PLAN
- 48-1/8" LINEAR STRIP SURFACE MOUNTED LIGHT FIXTURE PER ELEC. LIGHTING FLOOR PLAN
- 47" LONG RECESSED LINEAR LIGHT FIXTURE PER ELEC. LIGHTING FLOOR PLAN
- LINEAR SUPPLY DIFFUSER PER MECHANICAL FLOOR PLAN
- SUPPLY DIFFUSER PER MECHANICAL FLOOR PLAN
- RETURN AIR GRILLE PER MECHANICAL FLOOR PLAN
- EXHAUST REGISTER PER MECHANICAL FLOOR PLAN
- VAPOR PROOF LIGHT FIXTURE ON PREFAB CLG PANEL. LOCATE PER **K3**. FOR MODEL # REFER TO **1/K9.1**, ACCESSORIES

NOTES:

1. REFER TO COLORS, MATERIALS AND FINISHES LEGEND FOR ADDITIONAL INFORMATION, ON SHEET: (- / ID-1.0)
2. FOR KITCHEN LIGHTING FLOOR PLAN, REFER TO: (1 / E2.2)
3. FOR KITCHEN MECHANICAL FLOOR PLAN, REFER TO: (1 / M2-2.1)

STAMPS

LICENSED ARCHITECT RUHNAU CLARKE ARCHITECTS No. C-31940 Exp. 12/31/22 STATE OF CALIFORNIA

IDENTIFICATION STAMP
DIV. OF THE STATE ARCHITECT
APP: 04-120895 INC:
REVIEWED FOR
SS ☑ FLS ☑ ACS ☑
DATE: 06/27/2022

AGENCY
File No.

CONSULTANT BRANDING

RUHNAU CLARKE ARCHITECTS

KEYNOTES

03.353	SEALED CONCRETE FLOOR FINISH W/ RUBBER BASE PER FIN. SCHED, ID-1.0
05.505	METAL LADDER TO ROOF ACCESS HATCH ABOVE, SEE DETAIL 6/AD-3.0
06.411	STAINLESS STEEL COUNTERTOP WITHOUT BACKSPLASH, OPEN BELOW AT SLIDING WINDOW
09.309	TILE FLOOR OVER DEPRESSED SLAB PER STR FOUNDATION PLAN. SEE FINISH SCHEDULE, SHEET ID-1.0
09.310	THIN-SET TILE FLOOR, SEE FINISH SCHEDULE, SHEET ID-1.0
09.672	EPOXY FLOOR, W/ CONTINUOUS COVE BASE. SEE FIN. SCHED, ID-1.0
10.140	SIGNAGE PER DETAIL 26, 28, & 29/AD-8.0
10.510	ACCESSIBLE METAL LOCKERS PER FOODSERVICE PLANS ON SHEET K1, FOR LOCKER COUNT & ATTACHMENT INFORMATION, REFER TO DETAIL 21/AD-8.0
11.523	55" COMMERCIAL VIDEO FLAT SCREEN MONITOR, CEILING MOUNTED. CONNECT TO FOODSERVICE COMPUTER NETWORK FOR MENU BOARD DISPLAY SYSTEM. LED EDGELIT W/ INTERNAL COMPUTER INTERFACE & LAN CONNECTION, 1920 x 1080 NATIVE RESOLUTION, COMPLETE W/ CEILING MOUNTED POLE/BRACKET. REFER TO ELECTRICAL COMMUNICATIONS FLOOR PLAN, E4.2 & SPECS FOR BASIS OF DESIGN. FOR MOUNTING LOCATION, REFER TO CEILING PLAN & DETAIL 11/AD-8.0
11.525	MOBILE CRUISER (O.F.O.I.)
22.149	FLOOR DRAIN PER PLUMBING FLOOR PLAN SHEET 2/P1-2.2 (BLDG 900) / PLUMBING FLOOR PLAN SHEET 1/P2-2.2 (BLDG 400) & F.D. @ TILE DETAIL 9/AD-8.0

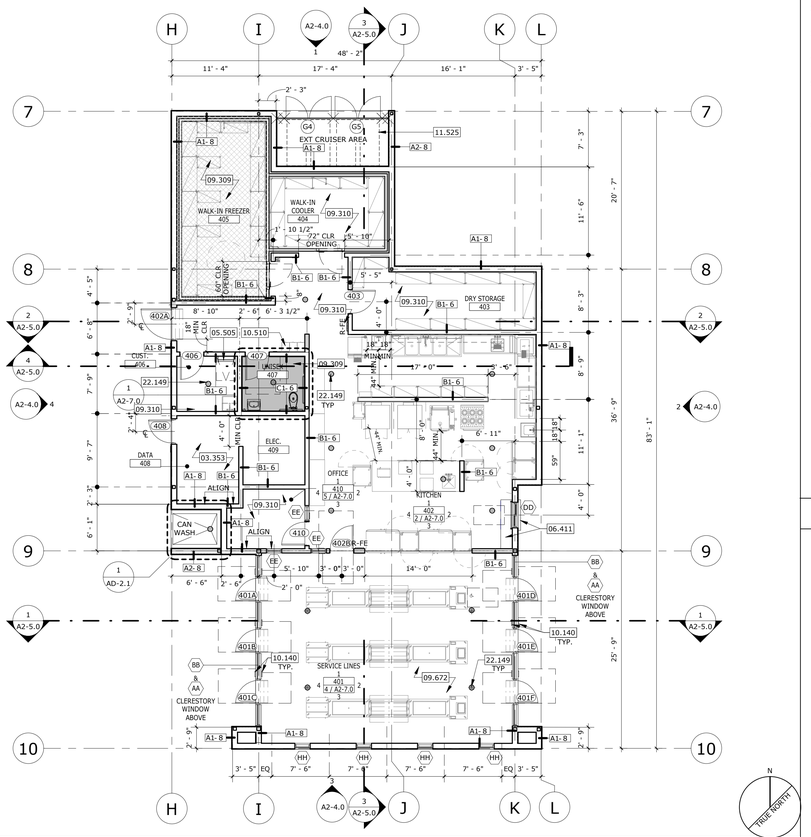

FLOOR PLAN

SCALE: 1/8" = 1'-0" | 1

FLOOR PLAN GENERAL NOTES

1. VERIFY ALL DIMENSIONS PRIOR TO CONSTRUCTION.
2. ALL DIMENSIONS ARE TO FACE OF STUD, CENTERLINE OF COLUMN OR EDGE OF SLAB, U.N.O.
3. SEE SHEET (- / AD-2.0) FOR WALL TYPE INFORMATION.
4. PROVIDE R-19 BATT INSULATION AT ALL EXTERIOR WALLS, U.N.O. GYPSUM BOARD AND INSULATION SHALL EXTEND FULL HEIGHT OF WALL TO UNDERSIDE OF ROOF STRUCTURE.
5. PROVIDE STUD BRACING AND SUPPORT FOR ALL WALL MOUNTED FIXTURES AND ACCESSORIES PER DETAIL: (9 / S0-1.6)
6. SEE SHEET (- / A2-8.0) FOR DOOR AND WINDOW INFORMATION
7. SET DOORS ADJACENT TO WALLS A MIN. OF 4" AWAY FROM WALL U.N.O.
8. FLOOR SINKS OR DRAINS OR TROUGHS EXPOSED TO P.O.T. OR PEDESTRIAN CIRCULATION PATHS SHALL HAVE 1/2" MAX. GRATE OPENINGS IN ALL DIRECTIONS. ELONGATED OPENINGS SHALL BE PLACED SO THAT THE LONG DIMENSION IS PERPENDICULAR TO THE DOMINANT DIRECTION OF TRAVEL (CBC SECTION 11B-302.3). THE MAX SLOPE TO FLOOR DRAIN IS 2%, PER DETAIL: (6 / K7.2)

FLOOR PLAN LEGEND

LEGEND:

- WALL TYPE, REFER TO SHEET **AD-2.0**
- # - A# - # WALL WIDTH / FIRE RATING (BY HOUR)
- 1t WINDOW TAG, FOR TYPE, REFER TO FLOOR PLAN SHEET **A2-1.0**
- 101 DOOR TAG, FOR TYPE, REFER TO FLOOR PLAN SHEET **A2-1.0**
- G# GATE TAG, FOR TYPE, REFER TO FLOOR PLAN SHEET **A2-1.0** & GATE SCHED ON SHEET **AS0.2**
- PROVIDE **2" DEPRESSED** CONC SLAB PER STR FOUNDATION PLAN **S2-1.0** SLOPED TO DRAIN WHERE OCCURS (1/8" PER FOOT MIN.).
- PROVIDE **8" DEPRESSED** CONC SLAB PER **1/K 9.1** & STR FOUNDATION PLAN **S2-1.0** SLOPED TO DRAIN WHERE OCCURS (1/8" PER FOOT MIN.).

WALL TYPES:

- A1 - SEE DETAIL: (14 / AD-2.0)
- A2 - SEE DETAIL: (17 / AD-2.0)
- B1 - SEE DETAIL: (9 / AD-2.0)
- C1 - SEE DETAIL: (2 / AD-2.0)

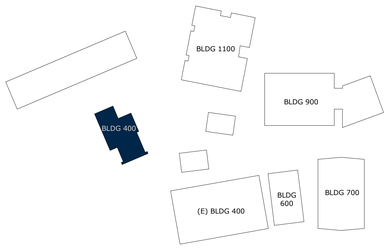

KEY PLAN

NTS

GHS KITCHEN & WEIGHTROOM: 06/13/2022 DSA SUBMITTAL

PROJECT No. :1-30-55
6/21/2022 3:15:29 PM

DRAWN BY: CHECKED BY:

ISSUE No.____ DATE____ DESCRIPTION____
REVISION No.____ DATE____ DESCRIPTION____

RUHNAUCLARKE.COM

3775 TENTH STREET, RIVERSIDE CALIFORNIA 92501 (951) 684 4664 / 5751 PALMER WAY, SUITE C, CARLSBAD CALIFORNIA 92010 (760) 438 5899

GHS KITCHEN & WEIGHTROOM
GROSSMONT HIGH SCHOOL
1100 MURRAY DR, EL CAJON, CA 92020
GROSSMONT UNION HIGH SCHOOL

BUILDING 400
NEW FOOD SERVICE
FLOOR & CLG PLANS

A2-1.0

1-30-55

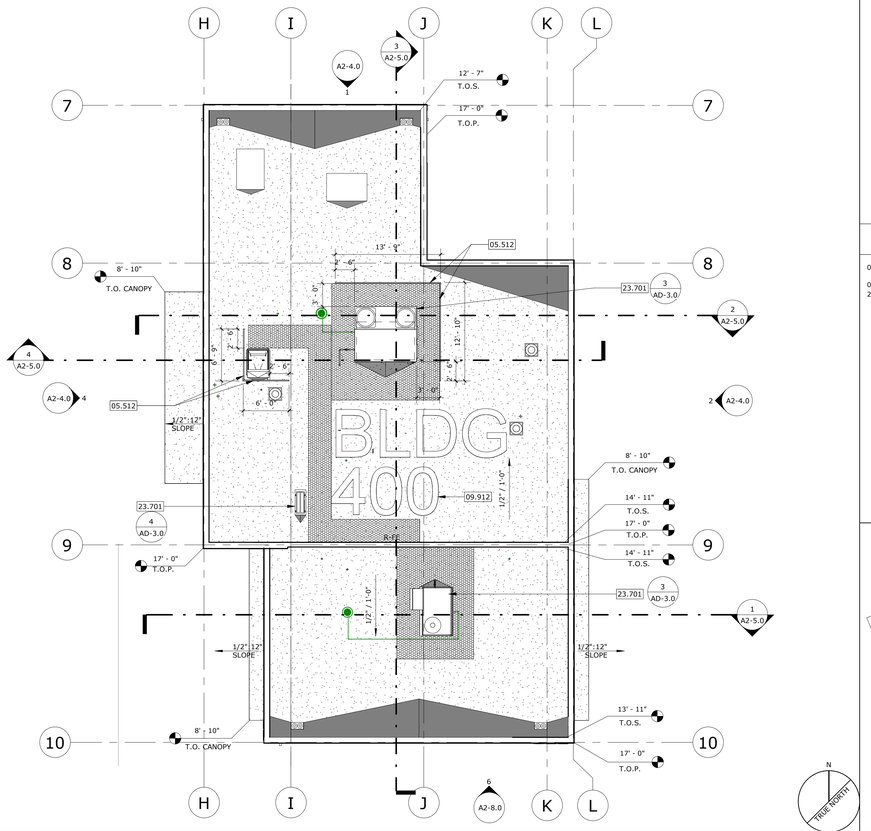

ROOF PLAN SCALE: 1/8" = 1'-0" 1

STAMPS

LICENSED ARCHITECT
No. C-21040
Exp. 10/31/23
STATE OF CALIFORNIA

IDENTIFICATION STAMP
DIV. OF THE STATE ARCHITECT
APP: 04-120895 INC:
REVIEWED FOR
SS ☑ FLS ☑ ACS ☑
DATE: 06/27/2022

CONSULTANT BRANDING

RUHNAU
CLARKE
ARCHITECTS

ROOF PLAN GENERAL NOTES

1. SEE DETAIL 1/AD-3.0 FOR TYPICAL ROOF ASSEMBLY.
2. FOR PIPE VENT PENETRATIONS THROUGH ROOF, REFER TO DETAIL 11/AD-3.0 & 12/AD-3.0 FOR TYP. INFO.
3. ALL CRICKETS SHALL BE SHAPED WITH PLYWOOD WITH A MIN. 1.5% SLOPE TO ROOF AND OVERFLOW DRAINS.
4. PROVIDE 36" WIDE CONTINUOUS WALKWAY TREAD FROM THE LANDING OF EACH ROOF ACCESS HATCH TO EACH MECHANCIAL UNIT. TREAD AT EACH UNIT TO SURROUND PERIMETER
5. AT MECHANICAL EQUIPMENT, REFER TO DETAIL 3/AD-3.0 & 4/AD-3.0 FOR ROOF CURB

ROOF PLAN LEGEND

SINGLE-PLY CLASS "A" MEMBRANE ROOFING, 1/2":12" MIN. SLOPE (U.N.O.) TO ROOF OVERFLOW, REFER TO DEATAIL: 1/AD-3.0

ROOF CRICKET, 1/2":12" MIN. SLOPE TO ROOF AND OVERFLOW DRAIN, REFER TO DETAIL: 2/AD-3.0

ROOF DRAIN WITH SEPARATE OVERFLOW DRAIN LINE, REFER TO DETAIL: 10/AD-3.0

ROOF ACCESS HATCH, REFER TO DETAIL: 6/AD-3.0

EXHAUST FAN, REFER TO MECHANICAL ROOF PLAN -/M2-2.1

ROOF TRAFFIC PADS MIN. WIDTH 3 FT LOCATE NEAR ROOF EQUIPMENT FOR FUTURE MAINTENANCE

KEYNOTES

05.512	42" HIGH ROOF 1 1/2" SCH 40 GUARDRAIL AT ROOF W/ MAX STANCHION SPACING 4'-0" O.C. PER DETAIL 18/S0-1.8
09.912	BUILDING IDENTIFICATION NUMBER PER DETAIL 30/AD-3.0
23.701	ROOF TOP UNIT PER MECHANICAL ROOF PLAN & DETAIL 2/AD-3.0

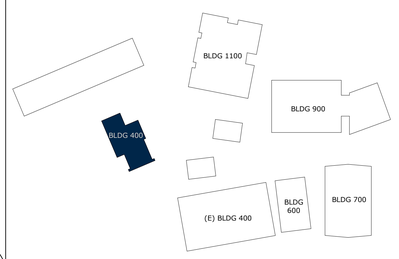

KEY PLAN NTS

GHS KITCHEN & WEIGHTROOM: 06/13/2022 DSA SUBMITTAL

PROJECT No. :1-30-55
6/21/2022 3:15:30 PM

DRAWN BY: CHECKED BY:

ISSUE No.	DATE	DESCRIPTION	REVISION No.	DATE	DESCRIPTION
ISSUE No.	DATE	DESCRIPTION	REVISION No.	DATE	DESCRIPTION
ISSUE No.	DATE	DESCRIPTION	REVISION No.	DATE	DESCRIPTION
ISSUE No.	DATE	DESCRIPTION	REVISION No.	DATE	DESCRIPTION

RUHNAUCLARKE.COM
3775 TENTH STREET, RIVERSIDE CALIFORNIA 92501 (951) 684 4664 / 5751 PALMER WAY, SUITE C, CARLSBAD CALIFORNIA 92010 (760) 438 5899

GHS KITCHEN & WEIGHTROOM
GROSSMONT HIGH SCHOOL
1100 MURRAY DR, EL CAJON, CA 92020
GROSSMONT UNION HIGH SCHOOL

BUILDING 400
NEW FOOD SERVICE
ROOF PLAN

A2-3.0

1-30-55

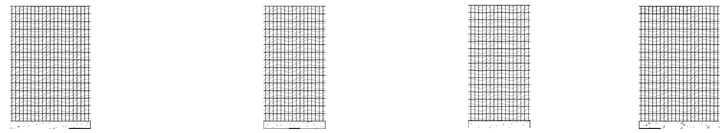

CAN WASH ELEVATION | SCALE: 1/4" = 1'-0" | REF.: | 7

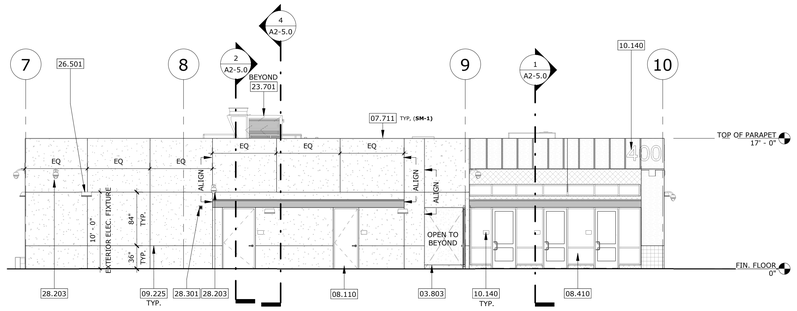

WEST BUILDING ELEVATION | SCALE: 1/8" = 1'-0" | 4

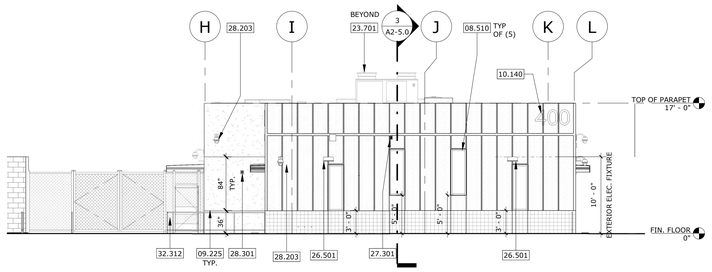

SOUTH BUILDING ELEVATION | SCALE: 1/8" = 1'-0" | 3

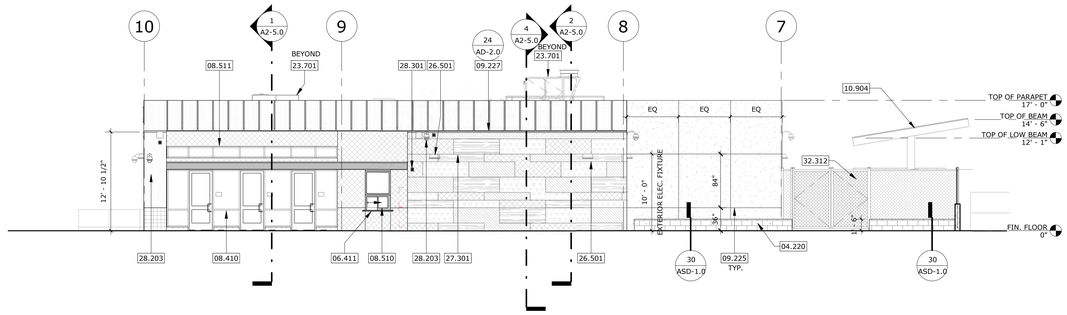

EAST BUILDING ELEVATION | SCALE: 1/8" = 1'-0" | 2

CPL ACCENT WALL PATTERN

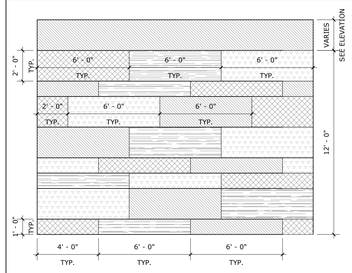

TYP. CPL ACCENT WALL PATTERN

CPL-3
CPL-4
CPL-5
CPL-6

NOTE:
REFER TO COLORS, MATERIALS AND FINISHES LEGEND FOR ADDITIONAL INFORMATION

ID-1.0

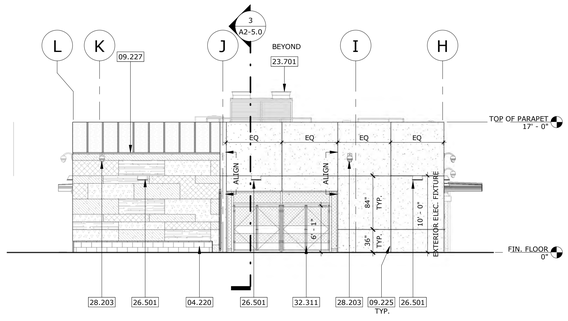

NORTH BUILDING ELEVATION | SCALE: 1/8" = 1'-0" | 1

STAMPS

LICENSED ARCHITECT — STEVEN CLARKE — No. C-31040 — STATE OF CALIFORNIA

IDENTIFICATION STAMP
DIV. OF THE STATE ARCHITECT
APP: 04-120895 INC:
REVIEWED FOR
SS ☑ FLS ☑ ACS ☑
DATE: 06/27/2022

CONSULTANT BRANDING

RUHNAU CLARKE ARCHITECTS

GENERAL NOTES-BLDG ELEVATIONS

1. SLAB ON GRADE: 0'-0" = GLOBAL ELEVATION: 683.00'
2. FOR TYPICAL EXTERIOR CEMENT PLASTER REVEAL, SEE DETAIL: 9 / AD-2.1
3. FOR TYPICAL EXTERIOR CEMENT PLASTER INSIDE CORNER, SEE DETAIL: 3 / AD-2.1
4. FOR TYPICAL EXTERIOR CEMENT PLASTER OUTSIDE CORNER, SEE DETAIL: 4 / AD-2.1
5. FOR TYPICAL EXTERIOR CEMENT PLASTER CONTROL JOINTS, SEE DETAIL: 11 / AD-2.1

EXTERIOR ELEVATIONS LEGEND

- METAL FASCIA **(SM-1)** *SEE SPECIFICATION SECTION 07 62 00*
- METAL COMPOSITE PANEL **(MCP-1)** *SEE SPECIFICATION SECTION 07 42 13.23* — FOR TYPICAL ATTACHMENT, SEE DETAIL: 23 / AD-2.0
- CEMENT PLASTER - PLASTER FINISH **(CPL-1)** *SEE SPECIFICATION SECTION 09 24 00*
- CEMENT PLASTER - PLASTER FINISH **(CPL-2)** *SEE SPECIFICATION SECTION 09 24 00*
- CEMENT PLASTER - PLASTER FINISH **(CPL-3)** *SEE SPECIFICATION SECTION 09 24 00*
- CEMENT PLASTER - PLASTER FINISH **(CPL-4)** *SEE SPECIFICATION SECTION 09 24 00*
- CEMENT PLASTER - PLASTER FINISH **(CPL-5)** *SEE SPECIFICATION SECTION 09 24 00*
- CEMENT PLASTER - PLASTER FINISH **(CPL-6)** *SEE SPECIFICATION SECTION 09 24 00*
- CERAMIC TILE **(T-5)** *SEE SPECIFICATION SECTION 09 30 00*
- CONCRETE MASONRY UNIT **(CMU-1)** *SEE SPECIFICATION SECTION 04 20 00*

NOTE:
REFER TO COLORS, MATERIALS AND FINISHES LEGEND FOR ADDITIONAL INFORMATION, SHEET **ID-1.0**

KEYNOTES

03.803	CAN WASH CONCRETE CURB & SLAB, REFER TO DETAIL 1/AD-2.1
04.220	CONCRETE MASONRY UNIT SEE 30/ASD-1.0
06.411	STAINLESS STEEL COUNTERTOP WITHOUT BACKSPLASH, OPEN BELOW AT SLIDING WINDOW
07.711	COPING
08.110	DOOR AND FRAME, REFER TO ARCHITECTURAL FLOOR PLAN FOR TYPE
08.410	STOREFRONT ASSEMBLY, REFER TO ARCHITECTURAL FLOOR PLAN FOR TYPE
08.510	WINDOW, REFER TO ARCHITECTURAL FLOOR PLAN FOR TYPE
08.511	CLERESTORY WINDOW, REFER TO ARCHITECTURAL FLOOR PLAN & REFLECTED CEILING PLAN FOR TYPE
09.225	PLASTER CONTROL JOINT PER DETAIL 11/AD-2.1
09.227	METAL REVEAL, REFER TO DETAIL 9/AD-2.1
10.140	SIGNAGE PER DETAIL 26, 28, & 29/AD-8.0
10.904	CANOPY SHADE STRUCTURE, REFER TO STRUCTURAL SHEET S3-1.1
23.701	ROOF TOP UNIT PER MECHANICAL ROOF PLAN & DETAIL 2/AD-3.0
26.501	LIGHT FIXTURE, EXTERIOR WALL MOUNTED, REFER TO ELECTRICAL LIGHTING FLOOR PLAN SHEET E2.2
27.301	INTERCOM SPEAKER, WALL RECESSED, REFER TO ELECTRICAL COMMUNICATIONS FLOOR PLAN
28.203	SURVEILLANCE CAMERA, WALL MOUNTED, PER ELEC PLAN E4.2 & DETAILS E4.7
28.301	FIRE ALARM SPEAKER, WALL MOUNTED, REFER TO ELECTRICAL FIRE ALARM FLOOR PLAN
32.311	CHAIN LINK GATE PER SCHEDULE, REFER TO SHEET AS0.2
32.312	8'-0" HIGH VINYL COATED CHAIN LINK FENCE, SEE 11/ASD-1.0

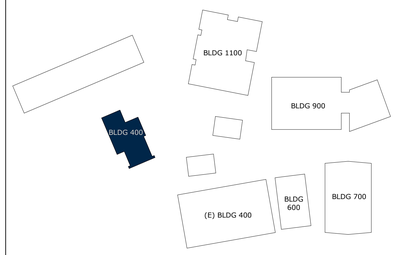

KEY PLAN NTS

GHS KITCHEN & WEIGHTROOM: 06/13/2022 DSA SUBMITTAL

PROJECT No. :1-30-55
6/21/2022 3:15:38 PM

DRAWN BY: CHECKED BY:
ISSUE No.____ DATE____ DESCRIPTION____
REVISION No.____ DATE____ DESCRIPTION____

RUHNAUCLARKE.COM

3775 TENTH STREET, RIVERSIDE CALIFORNIA 92501 (951) 684-4664 / 5751 PALMER WAY, SUITE C, CARLSBAD CALIFORNIA 92010 (760) 438 5899

GHS KITCHEN & WEIGHTROOM
GROSSMONT HIGH SCHOOL
1100 MURRAY DR, EL CAJON, CA 92020
GROSSMONT UNION HIGH SCHOOL

BUILDING 400
BUILDING ELEVATIONS

A2-4.0

1-30-55

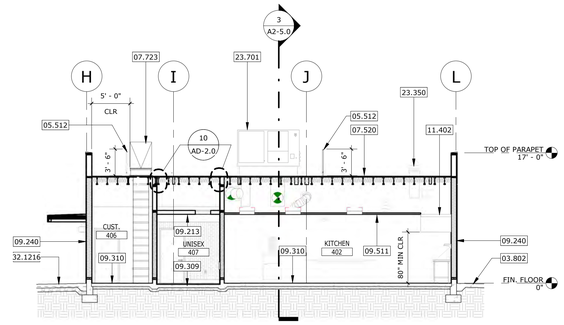

BUILDING SECTION | SCALE: 1/8" = 1'-0" | 4

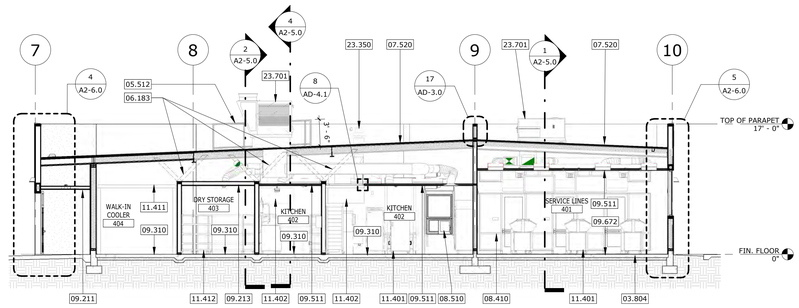

BUILDING SECTION | SCALE: 1/8" = 1'-0" | 3

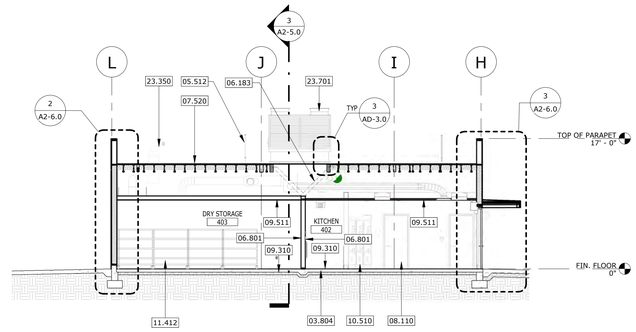

BUILDING SECTION | SCALE: 1/8" = 1'-0" | 2

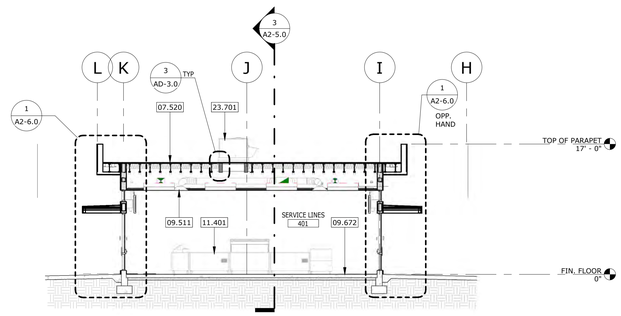

BUILDING SECTION | SCALE: 1/8" = 1'-0" | 1

GENERAL NOTES

1. SLAB ON GRADE: 0'-0" = GLOBAL ELEVATION: 683.00'
2. VERIFY ALL EXTERIOR ROOF OPENINGS & VENTS WITH MECHANICAL, ELECTRICAL, STRUCTURAL & PLUMBING DRAWINGS.
3. FOR TYPICAL ROOF VENT PENETRATION DETAIL SEE DETAILS 11/AD-3.0 & 12/AD-3.0
4. PROVIDE R-30 BATT INSULATION UNDERNEATH ROOF STRUCTURE. FOR TYPICAL ROOF CONSTRUCTION ASSEMBLY, SEE DETAIL: 1/AD-3.0
5. PROVIDE R-19 BATT INSULATION AT ALL EXTERIOR WALLS, U.N.O. GYPSUM BOARD AND INSULATION SHALL EXTEND FULL HEIGHT OF WALL TO UNDERSIDE OF ROOF STRUCTURE
6. ALL EXPOSED STRUCTURE, INCLUDING MECHANICAL & PLUMBING EQUIPMENT TO BE PAINTED. SEE ROOM FINISH SCHEDULE -/ID-1.0
7. REFER TO RELECTED CEILING PLANS FOR SOFFIT TYPES AND HEIGHTS; REFER TO ROOM FINISH SCHEDULE FOR CEILING FINISHES. -/A2-1.0 & -/ID-1.0

KEYNOTES

03.802	CONCRETE PAVING PER SITE PLAN
03.804	CONCRETE SLAB PER (BLDG 400) STRUCTURAL FOUNDATION PLAN, SHEET S2-1.0
05.512	42" HIGH ROOF 1 1/2" SCH 40 GUARDRAIL AT ROOF W/ MAX STANCHION SPACING 4'-0" O.C. PER DETAIL 18/S0-1.8
06.183	NON-BEARING WOOD PARTITION TOP BRACING PER STRUCTURAL DETAIL 3/S0-1.8
06.801	FIBERGLASS REINFORCED PANELING (FRP) PER FIN SCHED, ID-1.0
07.520	ROOF ASSEMBLY PER 1/AD-3.0
07.723	ROOF ACCESS HATCH & LADDER, REFER TO ARCHITECTURAL FLOOR PLAN & DETAIL 6/AD-3.0
08.110	DOOR AND FRAME, REFER TO ARCHITECTURAL FLOOR PLAN FOR TYPE
08.410	STOREFRONT ASSEMBLY, REFER TO ARCHITECTURAL FLOOR PLAN FOR TYPE
08.510	WINDOW, REFER TO ARCHITECTURAL FLOOR PLAN FOR TYPE
09.211	EXTERIOR CEMENT PLASTER CEILING, SEE DETAIL 26/AD-4.0
09.213	FRAMED GYPSUM BOARD ASSEMBLY CEILING, PAINTED PER FIN. SCHED., SEE ID-1.0
09.240	EXTERIOR CEMENT PLASTER ASSEMBLY
09.309	TILE FLOOR OVER DEPRESSED SLAB PER STR FOUNDATION PLAN. SEE FINISH SCHEDULE, SHEET ID-1.0
09.310	THIN-SET TILE FLOOR, SEE FINISH SCHEDULE, SHEET ID-1.0
09.511	SUSPENDED ACOUSTICAL PANEL CEILING, REFER TO REFLECTED CEILING PLAN
09.672	EPOXY FLOOR, W/ CONTINUOUS COVE BASE. SEE FIN. SCHED, ID-1.0
10.510	ACCESSIBLE METAL LOCKERS PER FOODSERVICE PLANS ON SHEET K1, FOR LOCKER COUNT & ATTACHMENT INFORMATION, REFER TO DETAIL 21/AD-8.0
11.401	KITCHEN EQUIPMENT PER FOODSERVICE FLOOR PLAN, SEE SHEET K 1
11.402	KITCHEN EXHAUST HOOD PER FOODSERVICE FLOOR PLAN, SEE SHEET K 1 & K 8-2
11.411	WALK-IN COOLER/FREEZER PREFAB INSULATED WALL PANELS PER FOODSERVICE FLOOR PLAN, SEE SHEET K 1
11.412	FOOD STORAGE SHELVING PER FOODSERVICE FLOOR PLAN, SEE SHEET K 1
23.350	EXHAUST FAN PER MECHANICAL ROOF PLAN
23.701	ROOF TOP UNIT PER MECHANICAL ROOF PLAN & DETAIL 2/AD-3.0
32.1216	ASPHALT PAVING

KEY PLAN NTS

STAMPS

LICENSED ARCHITECT — STEVEN CLARKE — No. C-31940 — Exp. 12/31/22 — STATE OF CALIFORNIA

IDENTIFICATION STAMP
DIV. OF THE STATE ARCHITECT
APP: 04-120895 INC:
REVIEWED FOR
SS ☑ FLS ☑ ACS ☑
DATE: 06/27/2022
AGENCY
FILE NUMBER

CONSULTANT BRANDING

RUHNAU CLARKE ARCHITECTS

GHS KITCHEN & WEIGHTROOM: 06/13/2022 DSA SUBMITTAL

PROJECT No. :1-30-55
6/21/2022 3:15:47 PM

DRAWN BY: CHECKED BY:

ISSUE No.____ DATE____ DESCRIPTION____
ISSUE No.____ DATE____ DESCRIPTION____
ISSUE No.____ DATE____ DESCRIPTION____
ISSUE No.____ DATE____ DESCRIPTION____

REVISION No.____ DATE____ DESCRIPTION____
REVISION No.____ DATE____ DESCRIPTION____
REVISION No.____ DATE____ DESCRIPTION____
REVISION No.____ DATE____ DESCRIPTION____

RUHNAUCLARKE.COM
3775 TENTH STREET, RIVERSIDE CALIFORNIA 92501 (951) 684 4664 / 5751 PALMER WAY, SUITE C, CARLSBAD CALIFORNIA 92010 (760) 438 5899

GHS KITCHEN & WEIGHTROOM
GROSSMONT HIGH SCHOOL
1100 MURRAY DR, EL CAJON, CA 92020
GROSSMONT UNION HIGH SCHOOL

BUILDING 400
BUILDING SECTIONS

A2-5.0

1-30-55

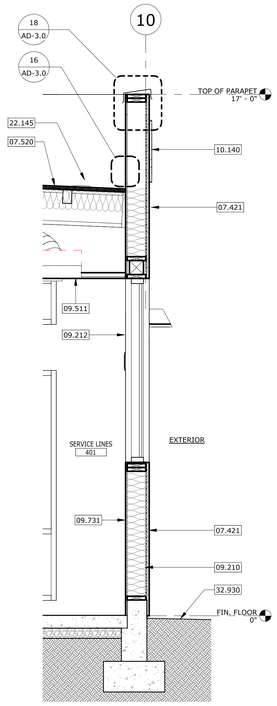

WALL SECTION | SCALE: 1/2" = 1'-0" | 5

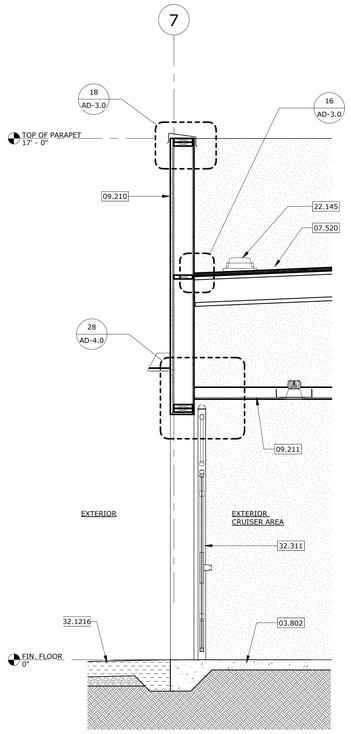

WALL SECTION | SCALE: 1/2" = 1'-0" | 4

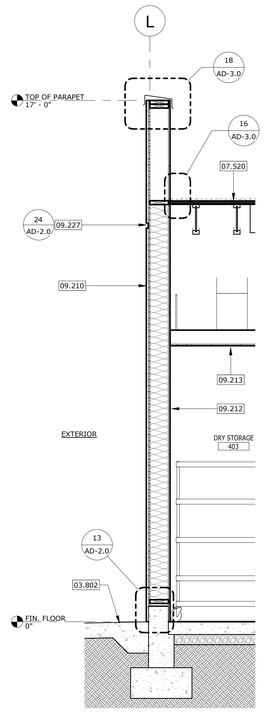

WALL SECTION | SCALE: 1/2" = 1'-0" | 2

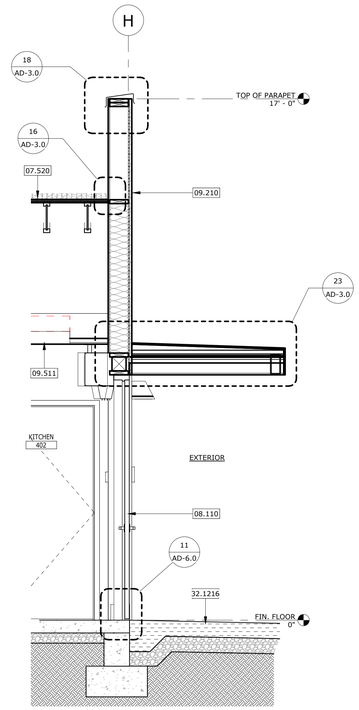

WALL SECTION | SCALE: 1/2" = 1'-0" | 3

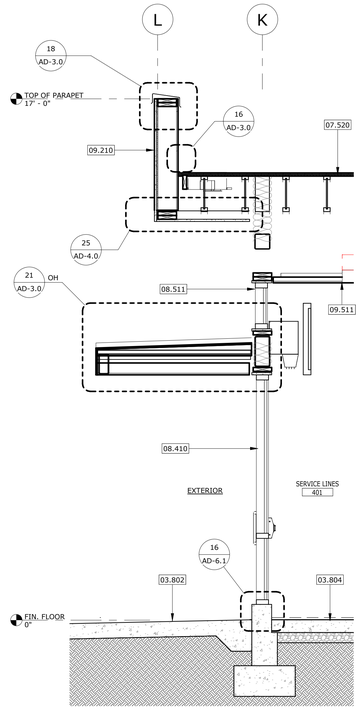

WALL SECTION | SCALE: 1/2" = 1'-0" | 1

STAMPS

LICENSED ARCHITECT
CHRISTOPHER CLARKE
No. C-31940
Exp. 12/31/22
STATE OF CALIFORNIA

IDENTIFICATION STAMP
DIV. OF THE STATE ARCHITECT
APP: 04-120895 INC:
REVIEWED FOR
SS ☑ FLS ☑ ACS ☑
DATE: 06/27/2022

CONSULTANT BRANDING

RUHNAU
CLARKE
ARCHITECTS

GENERAL NOTES

1. SLAB ON GRADE: 0'-0" = GLOBAL ELEVATION: 683.00'
2. VERIFY ALL EXTERIOR ROOF OPENINGS & VENTS WITH MECHANICAL, ELECTRICAL, STRUCTURAL & PLUMBING DRAWINGS.
3. FOR TYPICAL ROOF VENT PENETRATION DETAIL SEE DETAILS 11/AD-3.0 & 12/AD-3.0
4. PROVIDE R-30 BATT INSULATION UNDERNEATH ROOF STRUCTURE. FOR TYPICAL ROOF CONSTRUCTION ASSEMBLY, SEE DETAIL: 1/AD-3.0
5. PROVIDE R-19 BATT INSULATION AT ALL EXTERIOR WALLS, U.N.O. GYPSUM BOARD AND INSULATION SHALL EXTEND FULL HEIGHT OF WALL TO UNDERSIDE OF ROOF STRUCTURE
6. ALL EXPOSED STRUCTURE, INCLUDING MECHANICAL & PLUMBING EQUIPMENT TO BE PAINTED. SEE ROOM FINISH SCHEDULE -/ID-1.0
7. REFER TO RELECTED CEILING PLANS FOR SOFFIT TYPES AND HEIGHTS; REFER TO ROOM FINISH SCHEDULE FOR CEILING FINISHES. -/A2-1.0 & -/ID-1.0

KEYNOTES

03.802	CONCRETE PAVING PER SITE PLAN
03.804	CONCRETE SLAB PER (BLDG 400) STRUCTURAL FOUNDATION PLAN, SHEET S2-1.0
07.421	METAL COMPOSITE PANEL, REFER TO ARCHITECTURAL EXTERIOR ELEVATIONS FOR COLOR & FINISH
07.520	ROOF ASSEMBLY PER 1/AD-3.0
08.110	DOOR AND FRAME, REFER TO ARCHITECTURAL FLOOR PLAN FOR TYPE
08.410	STOREFRONT ASSEMBLY, REFER TO ARCHITECTURAL FLOOR PLAN FOR TYPE
08.511	CLERESTORY WINDOW, REFER TO ARCHITECTURAL FLOOR PLAN & REFLECTED CEILING PLAN FOR TYPE
09.210	EXTERIOR CEMENT PLASTER ASSEMBLY, SEE DETAIL 23/AD-4.0
09.211	EXTERIOR CEMENT PLASTER CEILING, SEE DETAIL 26/AD-4.0
09.212	GYPSUM BOARD WALL ASSEMBLY, PAINTED PER FIN. SCHED., SEE ID-1.0
09.213	FRAMED GYPSUM BOARD ASSEMBLY CEILING, PAINTED PER FIN. SCHED., SEE ID-1.0
09.227	METAL REVEAL, REFER TO DETAIL 9/AD-2.1
09.511	SUSPENDED ACOUSTICAL PANEL CEILING, REFER TO REFLECTED CEILING PLAN
09.731	CERAMIC WALL TILE, REFER TO FINISH SCHEDULE IN SHEET ID-1.0
10.140	SIGNAGE PER DETAIL 26, 28, & 29/AD-8.0
22.145	ROOF DRAIN PER 10/AD-3.0
32.311	CHAIN LINK GATE PER SCHEDULE, REFER TO SHEET AS0.2
32.930	PLANTING/LANDSCAPE
32.1216	ASPHALT PAVING

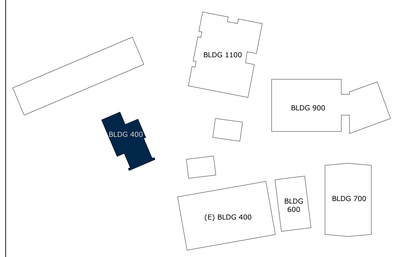

KEY PLAN
NTS

GHS KITCHEN & WEIGHTROOM: 06/13/2022 DSA SUBMITTAL

PROJECT No. :1-30-55
6/21/2022 3:15:52 PM

DRAWN BY: CHECKED BY:

ISSUE No.____ DATE____ DESCRIPTION____
ISSUE No.____ DATE____ DESCRIPTION____
ISSUE No.____ DATE____ DESCRIPTION____
ISSUE No.____ DATE____ DESCRIPTION____

REVISION No.____ DATE____ DESCRIPTION____
REVISION No.____ DATE____ DESCRIPTION____
REVISION No.____ DATE____ DESCRIPTION____
REVISION No.____ DATE____ DESCRIPTION____

RUHNAUCLARKE.COM
3775 TENTH STREET, RIVERSIDE CALIFORNIA 92501 (951) 684-4664 / 5751 PALMER WAY, SUITE C, CARLSBAD CALIFORNIA 92010 (760) 438 5899

GHS KITCHEN & WEIGHTROOM
GROSSMONT HIGH SCHOOL
1100 MURRAY DR, EL CAJON, CA 92020
GROSSMONT UNION HIGH SCHOOL

BUILDING 400
WALL SECTIONS

A2-6.0

1-30-55

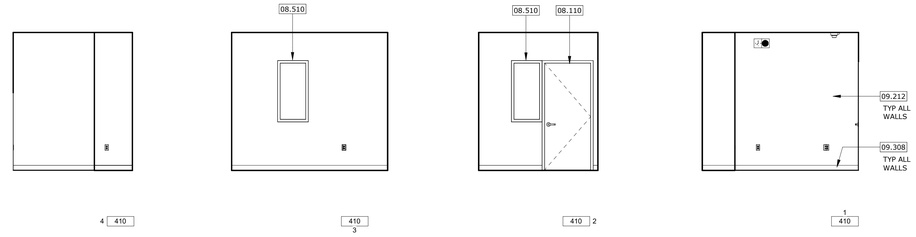

INTERIOR ELEVATIONS - OFFICE #410

SCALE: 1/4" = 1'-0" | 5

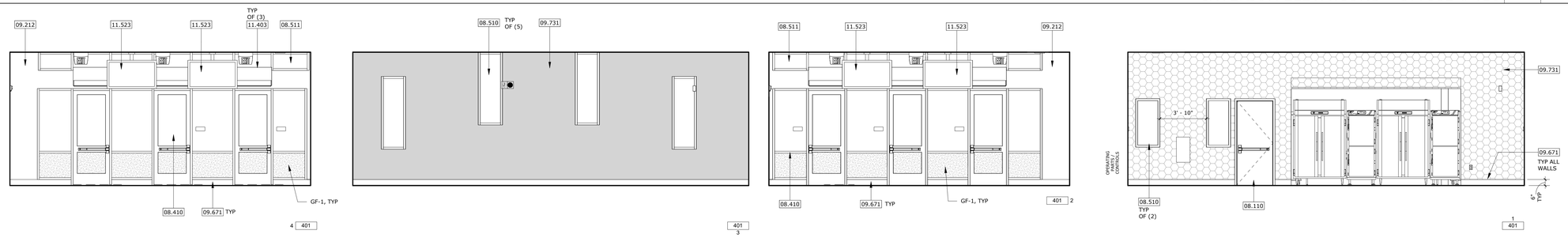

INTERIOR ELEVATIONS - SERVICE LINES #401

SCALE: 1/4" = 1'-0" | 4

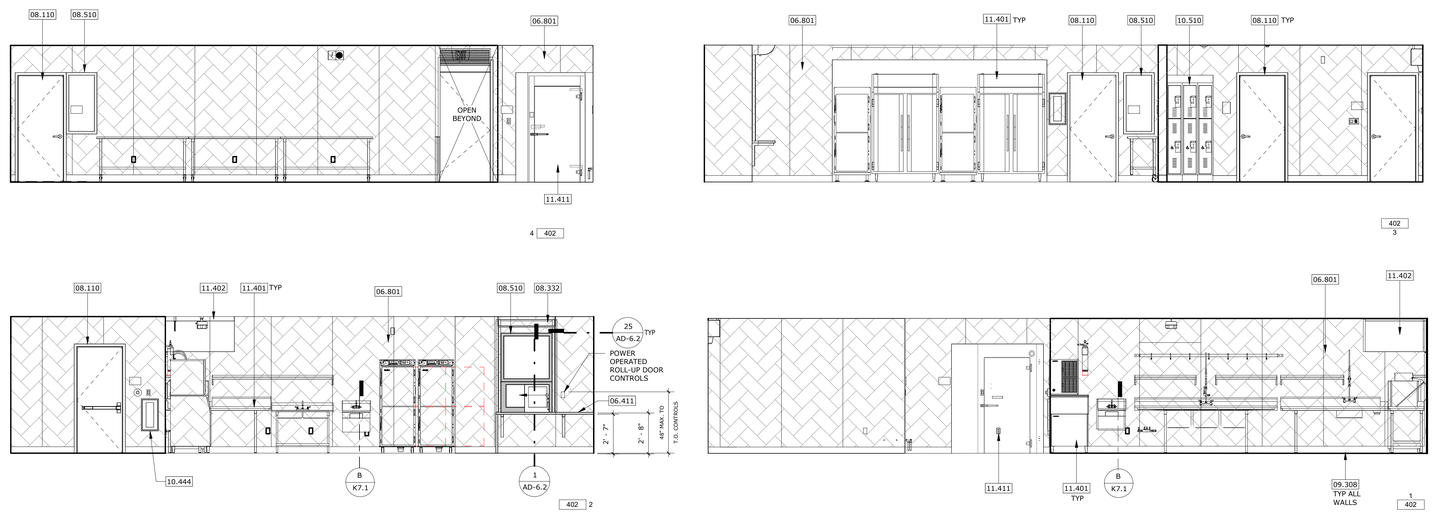

INTERIOR ELEVATIONS - KITCHEN #402

SCALE: 1/4" = 1'-0" | 2

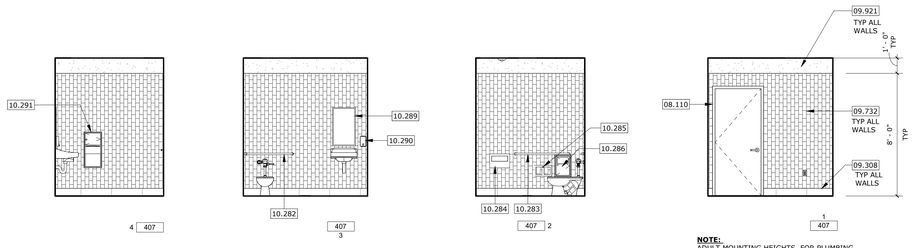

NOTE:
ADULT MOUNTING HEIGHTS. FOR PLUMBING FIXTURE MOUNTING HEIGHTS, ACCESSORY MOUNTING HEIGHTS & ACCESSORY FLOOR PLAN LOCATING DIMENSIONS, REFER TO DETAIL: 23 / AD-1.0

INTERIOR ELEVATIONS - UNISEX #407

SCALE: 1/4" = 1'-0" | 6

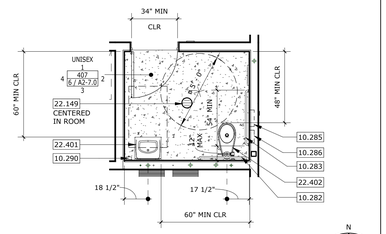

NOTE:
ADULT MOUNTING HEIGHTS. FOR PLUMBING FIXTURE MOUNTING HEIGHTS, ACCESSORY MOUNTING HEIGHTS & ACCESSORY FLOOR PLAN LOCATING DIMENSIONS, REFER TO DETAIL: 23 / AD-1.0

N
TRUE NORTH

ENLARGED PLAN-UNISEX #407

SCALE: 1/4" = 1'-0" | 1

STAMPS

LICENSED ARCHITECT — RUHNAU CLARKE — No. C-31040 — Exp. 12/31/22 — STATE OF CALIFORNIA

IDENTIFICATION STAMP
DIV. OF THE STATE ARCHITECT
APP: 04-120895 INC:
REVIEWED FOR
SS ☑ FLS ☑ ACS ☑
DATE: 06/27/2022
AGENCY
FILE NUMBER

CONSULTANT BRANDING

RUHNAU CLARKE ARCHITECTS

KEYNOTES

06.411	STAINLESS STEEL COUNTERTOP WITHOUT BACKSPLASH, OPEN BELOW AT SLIDING WINDOW
06.801	FIBERGLASS REINFORCED PANELING (FRP) PER FIN SCHED, ID-1.0
08.110	DOOR AND FRAME, REFER TO ARCHITECTURAL FLOOR PLAN FOR TYPE
08.332	OVERHEAD COILING DOOR, REFER TO ARCHITECTURAL FLOOR PLAN FOR TYPE
08.410	STOREFRONT ASSEMBLY, REFER TO ARCHITECTURAL FLOOR PLAN FOR TYPE
08.510	WINDOW, REFER TO ARCHITECTURAL FLOOR PLAN FOR TYPE
08.511	CLERESTORY WINDOW, REFER TO ARCHITECTURAL FLOOR PLAN & REFLECTED CEILING PLAN FOR TYPE
09.212	GYPSUM BOARD WALL ASSEMBLY, PAINTED PER FIN. SCHED., SEE ID-1.0
09.308	TILE COVE BASE PER FINISH SCHEDULE, SHEET ID-1.0
09.671	EPOXY COVED BASE PER FIN. SCHED, ID-1.0
09.731	CERAMIC WALL TILE, REFER TO FINISH SCHEDULE IN SHEET ID-1.0
09.732	CERAMIC WALL TILE AT RESTROOM, REFER TO FINISH SCHEDULE & RESTROOM TILE PATTERNS IN SHEET ID-1.0
09.921	EXPOSED GYP. BD. TO BE PAINTED, LEVEL 4 FINISH, FOR PAINT COLOR, REFER TO FINISH SCHEDULE IN SHEET ID-1.0
10.282	REAR GRAB BAR, 36" LONG MIN, PER 16/AD-1.0
10.283	SIDE GRAB BAR, 42" LONG MIN, PER 16/AD-1.0
10.284	TOILET SEAT COVER DISPENSER
10.285	TOILET PAPER DISPENSER, RECESSED
10.286	SANITARY NAPKIN DISPOSAL, RECESSED
10.289	MIRROR
10.290	SOAP DISPENSER
10.291	PAPER TOWEL DISPENSER / WASTE RECEPTACLE, RECESSED
10.444	RECESSED FIRE EXTINGUISHER CABINET PER DETAIL 2/AD-8.0, FIRE EXTINGUISHER PER SHEET K 1
10.510	ACCESSIBLE METAL LOCKERS PER FOODSERVICE PLANS ON SHEET K1, FOR LOCKER COUNT & ATTACHMENT INFORMATION, REFER TO DETAIL 21/AD-8.0
11.401	KITCHEN EQUIPMENT PER FOODSERVICE FLOOR PLAN, SEE SHEET K 1
11.402	KITCHEN EXHAUST HOOD PER FOODSERVICE FLOOR PLAN, SEE SHEET K 1 & K 8-2
11.403	AIR CURTAIN PER FOODSERVICE FLOOR PLAN, SEE SHEET K 1
11.411	WALK-IN COOLER/FREEZER PREFAB INSULATED WALL PANELS PER FOODSERVICE FLOOR PLAN, SEE SHEET K 1
11.523	55" COMMERCIAL VIDEO FLAT SCREEN MONITOR, CEILING MOUNTED. CONNECT TO FOODSERVICE COMPUTER NETWORK FOR MENU BOARD DISPLAY SYSTEM. LED EDGELIT W/ INTERNAL COMPUTER INTERFACE & LAN CONNECTION, 1920 x 1080 NATIVE RESOLUTION, COMPLETE W/ CEILING MOUNTED POLE/BRACKET. REFER TO ELECTRICAL COMMUNICATIONS FLOOR PLAN, E4.2 & SPECS FOR BASIS OF DESIGN. FOR MOUNTING LOCATION, REFER TO CEILING PLAN & DETAIL 11/AD-8.0
22.149	FLOOR DRAIN PER PLUMBING FLOOR PLAN SHEET 2/P1-2.2 (BLDG 900) / PLUMBING FLOOR PLAN SHEET 1/P2-2.2 (BLDG 400) & F.D. @ TILE DETAIL 9/AD-8.0
22.401	LAVATORY PER PLUMBING FLOOR PLAN SHEET 2/P1-2.2 (BLDG 900) / PLUMBING FLOOR PLAN SHEET 1/P2-2.2 (BLDG 400) & DETAIL 23/AD-1.0
22.402	WATER CLOSET PER PLUMBING FLOOR PLAN SHEET 2/P1-2.2 (BLDG 900) / PLUMBING FLOOR PLAN SHEET 1/P2-2.2 (BLDG 400) & DETAIL 23/AD-1.0

INTERIOR ELEVATIONS LEGEND

PAINT
- P-1
- P-2
- P-4
- P-5

TILING
- T-3
- T-6

GRAPHIC FILM
- GF-1
- GF-2

FIBERGLASS REINFORCED PANELS
- FRP-1

TACKABLE WALL PANELS
- TWP-1
- TWP-2

NOTE:
REFER TO COLORS, MATERIALS AND FINISHES LEGEND FOR ADDITIONAL INFORMATION ID-1.0

KEY PLAN

NTS

GHS KITCHEN & WEIGHTROOM: 06/13/2022 DSA SUBMITTAL

PROJECT No. :1-30-55
6/21/2022 3:37:08 PM

DRAWN BY: CHECKED BY:

ISSUE No.	DATE	DESCRIPTION	REVISION No.	DATE	DESCRIPTION
ISSUE No.	DATE	DESCRIPTION	REVISION No.	DATE	DESCRIPTION
ISSUE No.	DATE	DESCRIPTION	REVISION No.	DATE	DESCRIPTION
ISSUE No.	DATE	DESCRIPTION	REVISION No.	DATE	DESCRIPTION

RUHNAUCLARKE.COM
3775 TENTH STREET, RIVERSIDE CALIFORNIA 92501 (951) 684 4664 / 5751 PALMER WAY, SUITE C, CARLSBAD CALIFORNIA 92010 (760) 438 5899

GHS KITCHEN & WEIGHTROOM
GROSSMONT HIGH SCHOOL
1100 MURRAY DR, EL CAJON, CA 92020
GROSSMONT UNION HIGH SCHOOL

BUILDING 400
ENLARGED PLAN &
INTERIOR ELEVATIONS

A2-7.0

1-30-55

DOOR SCHEDULE - FOOD SERVICE

DOOR No.	ROOM No.	ROOM NAME	DOOR TYPE	FRAME TYPE	DOOR MEASUREMENTS WIDTH	HEIGHT	THICKNESS	HDWR GROUP	LOCKABLE FROM THE INSIDE	PANIC HDWR	DOOR MATERIAL	DOOR FINISH	DOOR COLOR	FRAME MATERIAL	FRAME FINISH	FRAME COLOR	DETAILS HEAD	JAMB	SILL	REMARKS
401A	401	SERVICE LINES	B	ALUM/GLASS	3' - 0"	7' - 10"	1 3/4"	17	YES	YES	ALUM	FF	ALUM-1	ALUM	FF	ALUM-1	13 / AD-6.1	14 / AD-6.1	11 / AD-6.1	PROVIDE SECURITY DOOR LOCK PER 2019 CBC SECTION 1010.1.11
401B	401	SERVICE LINES	B	ALUM/GLASS	3' - 0"	7' - 10"	1 3/4"	17	YES	YES	ALUM	FF	ALUM-1	ALUM	FF	ALUM-1	13 / AD-6.1	14 / AD-6.1	11 / AD-6.1	PROVIDE SECURITY DOOR LOCK PER 2019 CBC SECTION 1010.1.11
401C	401	SERVICE LINES	B	ALUM/GLASS	3' - 0"	7' - 10"	1 3/4"	17	YES	YES	ALUM	FF	ALUM-1	ALUM	FF	ALUM-1	13 / AD-6.1	14 / AD-6.1	11 / AD-6.1	PROVIDE SECURITY DOOR LOCK PER 2019 CBC SECTION 1010.1.11
401D	401	SERVICE LINES	B	ALUM/GLASS	3' - 0"	7' - 10"	1 3/4"	17	YES	YES	ALUM	FF	ALUM-1	ALUM	FF	ALUM-1	13 / AD-6.1	14 / AD-6.1	11 / AD-6.1	PROVIDE SECURITY DOOR LOCK PER 2019 CBC SECTION 1010.1.11
401E	401	SERVICE LINES	B	ALUM/GLASS	3' - 0"	7' - 10"	1 3/4"	17	YES	YES	ALUM	FF	ALUM-1	ALUM	FF	ALUM-1	13 / AD-6.1	14 / AD-6.1	11 / AD-6.1	PROVIDE SECURITY DOOR LOCK PER 2019 CBC SECTION 1010.1.11
401F	401	SERVICE LINES	B	ALUM/GLASS	3' - 0"	7' - 10"	1 3/4"	17	YES	YES	ALUM	FF	ALUM-1	ALUM	FF	ALUM-1	13 / AD-6.1	14 / AD-6.1	11 / AD-6.1	PROVIDE SECURITY DOOR LOCK PER 2019 CBC SECTION 1010.1.11
402A	402	KITCHEN	A	HM	4' - 0"	7' - 10"	1 3/4"	06	YES	YES	HM	PSG	P-6	HM	PSG	P-6	7/AD-6.0	18/AD-6.0	11/AD-6.0	PROVIDE SECURITY DOOR LOCK PER 2019 CBC SECTION 1010.1.11
402B	402	KITCHEN	A	HM	3' - 0"	7' - 0"	1 3/4"	07			HM	PSG	P-6	HM	PSG	P-6	20/AD-6.0	19/AD-6.0	26F/AD-6.0	
403	403	DRY STORAGE	A	HM	3' - 0"	7' - 0"	1 3/4"	03			HM	PSG	P-6	HM	PSG	P-6	20/AD-6.0	19/AD-6.0	26G/AD-6.0	
406	406	CUST.	A	HM	3' - 0"	7' - 0"	1 3/4"	02			HM	PSG	P-6	HM	PSG	P-6	20/AD-6.0	19/AD-6.0	26G/AD-6.0	
407	407	UNISEX	A	HM	3' - 0"	7' - 0"	1 3/4"	04			HM	PSG	P-6	HM	PSG	P-6	22/AD-6.0	21/AD-6.0	26G/AD-6.0	
408	408	DATA	A	HM	3' - 0"	7' - 10"	1 3/4"	05			HM	PSG	P-6	HM	PSG	P-6	7/AD-6.0	18/AD-6.0	6/AD-6.0	
410	410	OFFICE	A	HM	3' - 0"	7' - 0"	1 3/4"	01			HM	PSG	P-6	HM	PSG	P-6	20/AD-6.0	19/AD-6.0	26G/AD-6.0	

DOOR SCHEDULE

SCALE: 1/4" = 1'-0" | 3

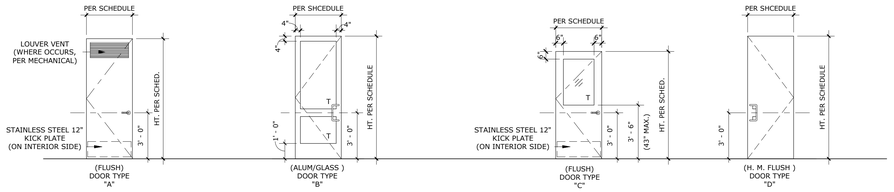

DOOR TYPES

SCALE: 1/4" = 1'-0" | 2

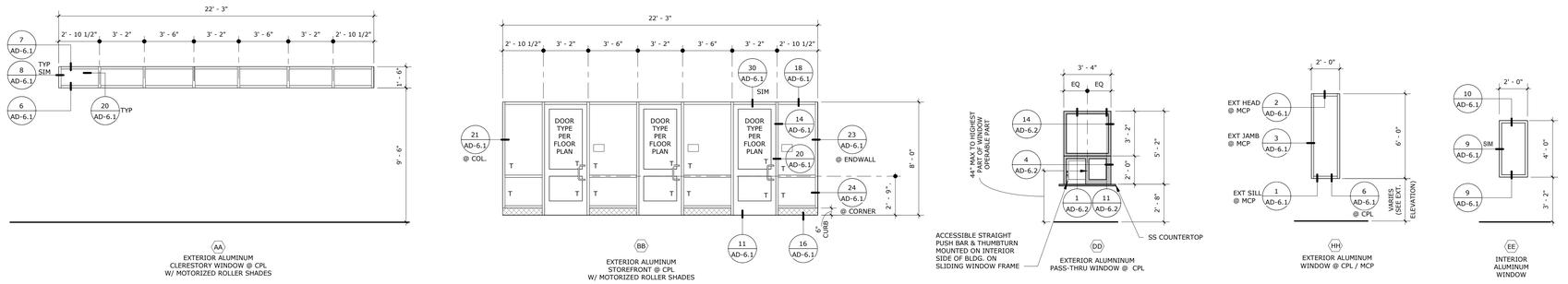

WINDOW TYPES

SCALE: 1/4" = 1'-0" | 1

GENERAL NOTES

1. SEE SHEET **AD-6.0 & AD-6.1** FOR HOLLOW METAL FRAME DETAILS
2. SET DOORS ADJACENT TO WALLS A MIN. OF 4" AWAY FROM WALL U.N.O.
3. ALL GLAZING IN DOORS, AND WINDOWS BELOW 8'-0" A.F.F., ARE TEMPERED OR AS REQUIRED BY SECTION 2406 OF THE 2019 CBC
4. PROVIDE DOOR STOPS AT ALL INTERIOR DOORS. PROVIDE BACKING PLATE PER DETAIL 9/S0-1.6
5. ALL EXTERIOR DOORS ARE TO SWING OUT AND OPEN AT A MIN. OF 110 DEGREES FROM ITS CLOSED POSITION WHERE POSSIBLE, U.N.O.
   -EXCEPTION: WHERE TACTILE SIGNAGE IS LOCATED ON HINGE SIDE OF DOOR, DOORS TO HAVE A 90 DEGREE SWING LIMIT
6. ALL EXTERIOR DOORS SHALL HAVE A POLYSTYRENE CORE (THERMAL RESISTANCE)
7. PROVIDE AIR SEALS/WEATHER STRIPPING AT ALL EXTERIOR DOORS TO CONDITIONED SPACES
8. ALL FLOOR MATERIAL CHANGE SHALL BE LOCATED UNDER THE CENTERLINE OF THE DOOR WHERE OCCURS, TYP.
9. ALL EXTERIOR DOORS SHALL BE OPERABLE FROM THE INTERIOR WITHOUT THE USE OF A KEY OR ANY SPECIAL KNOWLEDGE OR EFFORT. DEAD BOLTS ARE ONLY PERMITTED WHEN OPERABLE WITH SINGLE EFFORT LEVER TYPE HARDWARE
10. HAND ACTIVATED DOOR OPENING HARDWARE SHALL BE MOUNTED BETWEEN 34"-44" A.F.F.
11. ALL DOORS SHALL BE LOCKABLE FROM INSIDE
12. PER SECTION 1010.1.10 IN THE CBC 2019, DOOR SERVING ROOMS OR SPACES WITH AN OCCUPANT LOAD OF 50 OR MORE ARE REQUIRED TO HAVE PANIC HARDWARE OR FIRE EXIT HARDWARE
13. PER CBC 2019 11B-404.2.5, THRESHOLDS SHALL BE 1/2" HIGH MAX. W/ 1:2 BEVELED, SEE DETAILS 26/AD-6.0 & 6/AD-6.0
14. THE BOTTOM 10" OF ALL DOORS EXTENDING THE FULL WIDTH SHALL HAVE A SMOOTH UNINTERRUPTED SURFACE TO ALLOW THE DOOR TO BE OPENED BY A WHEELCHAIR FOOTREST WITHOUT CREATING A TRAP OR HAZARDOUS CONDITION. CBC 2019 11B-404.2.10
15. THE FORCE FOR PUSHING OR PULLING OPEN A DOOR SHALL BE AS FOLLOWS: CBC 2019 SECTION 11B-404.2.9

    - INTERIOR HINGED DOORS, SLIDING OR FOLDING DOORS, AND EXTERIOR HINGED DOORS: 5 POUNDS (22.2 N) MAXIMUM. REQUIRED FIRE DOORS: THE MINIMUM OPENING FORCE ALLOWABLE BY THE DSA AUTHORITY, NOT TO EXCEED 15 POUNDS (66.7 N). THESE FORCES DO NOT APPLY TO THE FORCE REQUIRED TP RETRACT LATCH BOLTS OR DISENGAGE OTHER DEVICES THAT HOLD THE DOOR IN A CLOSED POSITION.

    - THE FORCE REQUIRED FOR ACTIVATING ANY OPERABLE PARTS, SUCH AS LEVER HARDWARE, OR DISENGAGING OTHER DEVICES SHALL BE 5 POUNDS (22.2 N) MAXIMUM TO COMPLY WITH CBC SECTION 11B-309.4
16. REFER TO SPECIFICATION SECTION **08 71 00** FOR DOOR HARDWARE INFORMATION

ABBREVIATIONS

ALUM	ALUMINUM
AN	ANODOZIED
HM	HOLLOW METAL
HC	HOLLOW CORE
GALV.	GALVANIZED
STL	STEEL
PSG	PAINT: SEMI-GLOSS

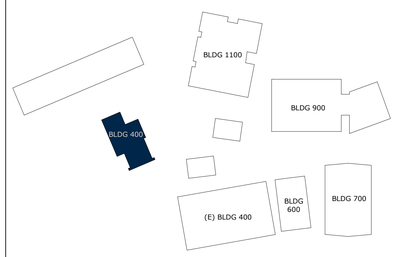

KEY PLAN NTS

STAMPS

LICENSED ARCHITECT REGISTERED PROFESSIONAL ENGINEER CLARKE No. C-31940 Exp. 12/31/22 STATE OF CALIFORNIA

IDENTIFICATION STAMP
DIV. OF THE STATE ARCHITECT
APP: 04-120895 INC:
REVIEWED FOR
SS ☑ FLS ☑ ACS ☑
DATE: 06/27/2022
AGENCY
File No.

CONSULTANT BRANDING

RUHNAU CLARKE ARCHITECTS

GHS KITCHEN & WEIGHTROOM: 06/13/2022 DSA SUBMITTAL

PROJECT No. :1-30-55
6/21/2022 3:16:13 PM

DRAWN BY: CHECKED BY:

ISSUE No.____ DATE____ DESCRIPTION____
REVISION No.____ DATE____ DESCRIPTION____

RUHNAUCLARKE.COM

3775 TENTH STREET, RIVERSIDE CALIFORNIA 92501 (951) 684-4664 / 5751 PALMER WAY, SUITE C, CARLSBAD CALIFORNIA 92010 (760) 438 5899

GHS KITCHEN & WEIGHTROOM
GROSSMONT HIGH SCHOOL
1100 MURRAY DR, EL CAJON, CA 92020
GROSSMONT UNION HIGH SCHOOL

BUILDING 400
DOOR SCHEDULE &
WINDOW TYPES

A2-8.0

1-30-55

MOUNTING HEIGHTS

DIMENSIONS:	ADULTS
TOILET CENTERLINE FROM WALL	17" - 18"
TOILET SEAT HEIGHT (TO TOP OF SEAT)	17" - 19"
GRAB BAR HEIGHT (SIDE)	33" TOP OF G.B.
GRAB BAR (DISTANCE FROM WALL)	12" MAX
TOILET PAPER HEIGHT (TO OUTLET)	19" MIN.
TOILET PAPER IN FRONT OF TOILET (TO CL)	7"-9"
NAPKIN DISPOSAL, SEE NOTE 2 BELOW	12" MAX.
DISPENSER	40" MAX.
MIRROR / SOAP DISPENSER (TO BOTTOM)	40" MAX.
LAVATORY/SINK TOP HEIGHT	34" MAX.
LAVATORY APRON CLEARNACE	29" MAX.
LAVATORY/SINK KNEE CLEARANCE	27" MAX.
URINAL LIP HEIGHT	17" MAX.
URINAL FLUSH HANDLE HEIGHT	44" MAX.

NOTES:

1. CONTRACTOR TO PROVIDE MOUNTING HEIGHTS INDICATED. VERIFY INTENDED USE OF EACH RESTROOM PRIOR TO ROUGH IN. PROVIDE BACKING PER STRUCTURAL DRAWINGS AS REQUIRED.

2. WALL MOUNTED AND LOCATED ON THE SIDEWALL BETWEEN THE REAR WALL OF THE TOILET AND THE TOILET PAPER DISPENSER, ADJACENT TO THE TOILET PAPER DISPENSER

ACCESSORY AND EQUIPMENT KEYNOTES

ACCESSORIES

- 1 NEW 18" X 30" TEMPERED GLASS MIRROR
- 2 NEW SURFACE MOUNTED SOAP DISPENSER FOR LIQUID SOAP - INSTALLED AT 40" A.F.F. (OVER OBSTRUCTION)
- 3 NEW RECESSED PAPER TOWEL DISPENSER & WASTE RECEPTACLE
- 3A SEMI RECESSED HAND DRYER, ADA COMPLIANT
- 4 NEW CLOTHES HOOK W/ CONCEALED MOUNTING, CENTERED ON DOOR. ACCESSIBLE HOOK INSTALLED @ 40" A.F.F. TO HIGHEST OPERABLE PART, NON-ACCESSIBLE HOOK INSTALLED @ 48" A.F.F. TO CENTER
- 5 NEW SURFACE MOUNTED TOILET SEAT COVER DISPENSER
- 6 NEW GRAB BARS (SIDE = 48" L. X 1-1/4" DIA., REAR = 36" L. X 1-1/4" DIA.). 16/AD-1.0
- 7 NEW RECESSED MULTI-ROLL TOILET TISSUE DISPENSER (4" MAX. PROJECTION FROM FIN. FACE OF WALL)
- 8 NEW RECESSED FEMININE NAPKIN DISPOSAL (@ WOMENS/GIRLS ONLY).
- 9 NEW SURFACE MOUNTED MULTI-ROLL TOILET TISSUE DISPENSER
- 10 NEW SURFACE MOUNTED FEMININE NAPKIN DISPOSAL (@ WOMENS/GIRLS ONLY).

MECHANICAL / PLUMBING

- 11 INSULATE DRAIN AND ALL WATER PIPING TO PREVENT CONTACT. THERE SHALL BE NO SHARP OR ABRASIVE SURFACES UNDER THE LAVATORY PER CBC 11B-606.5 AND HAVE THE FOLLOWING BURN CHARACTERISTICS: FLAME SPREAD OF 15 OR LESS SMOKE GENERATION OF 50 OR LESS.

EQUIPMENT

- 12 NEW ACCESSIBLE WATER CLOSET.
- 13 NEW ACCESSIBLE URINAL.
- 14 NEW ACCESSIBLE LAVATORY.
- 15 NEW TOILET PARTITION 10/AD-2.1

GENERAL NOTES:

FAUCET CONTROLS & OPERATING MECHANISMS SHALL BE OPERABLE W/ ONE HAND & SHALL NOT REQUIRE TIGHT GRASPING, PINCHING OR TWISTING OF THE WRIST. THE FORCE REQUIRED TO ACTIVATE CONTROLS SHALL BE NO MORE THAN 5 LBS. LEVER OPERATED, PUSH TYPE & ELECTRONICALLY CONTROLLED MECHANISMS ARE ACCECPTABLE. SELF-CLOSING VALVES ARE ALLOWED IF THE FAUCET REMAINS OPEN FOR AT LEAST 10 SECONDS.

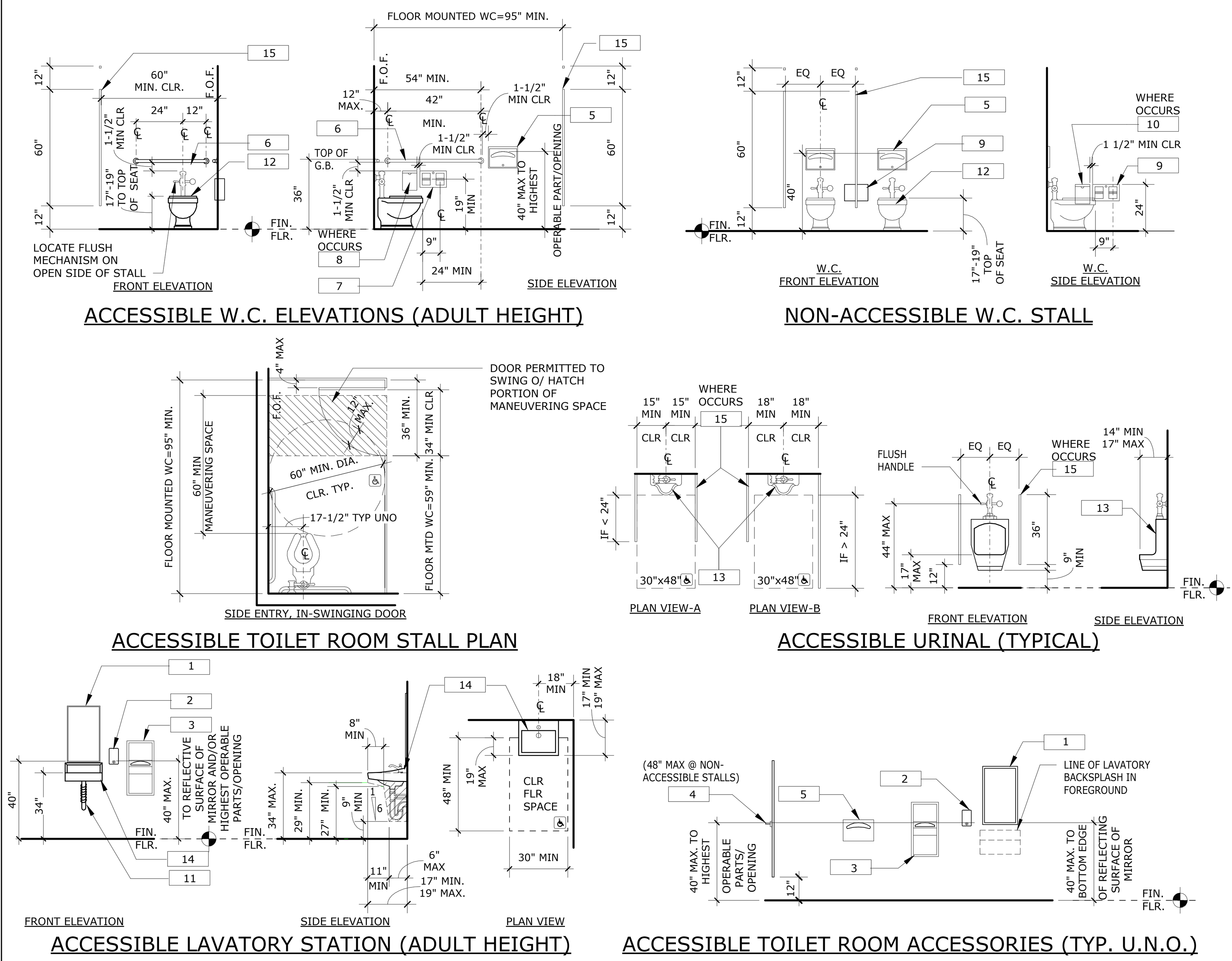

FIXTURE & ACCESSORY CLEARANCES — SCALE: 1/4" = 1'-0" — 23

MEASUREMENT RANGE	MINIMUM INCHES MAXIMUM IN INCHES
DOT BASE DIAMETER	0.059 (1.5mm) to 0.063 (1.6mm)
DISTANCE BETWEEN TWO DOTS IN THE SAME CELL 1	0.090 (2.3mm) to 0.100 (2.5mm) 0.100 FOR CALIFORNIA
DISTANCE BETWEEN CORRESPONDING DOTS IN ADJACENT CELLS 1	0.241 (6.1mm) to 0.300 (7.6mm) 0.300 FOR CALIFORNIA
DOT HEIGHT	0.025 (0.6mm) to 0.037 (0.9mm)
DISTANCE BETWEEN CORRESPONDING DOTS IN FROM ONE CELL DIRECTLY BELOW 1	0.395 (10mm) to 0.400 (10.2mm)

1 MEASURE FROM CENTER TO CENTER

CHARACTER TYPE: CHARACTERS ON SIGNS SHALL BE RIASED 1/32" MINIMUM AND SHALL BE SAN SERIF UPPER CHARACTERS ACCOMPANIED BY CONTRACTED GRADE 2 BRAILLE.

CHARACTER SIZE: RAISED CHARACTERS SHALL BE A MINIMUM OF 5/8" AND A MAXIMUM OF 2" HIGH.

FINISH AND CONTRAST: CONTRAST BETWEEN CHARACTERS, SYMBOLS AND THE BACKGROUNDS MUST BE 70% MINIMUM AND HAVE A NON-GLARE FINISH.

PROPORTIONS: CHARACTERS SHALL BE SELECTED FROM FONTS WHERE THE WIDTH OF THE UPPER CASE LETTER "O" IS 60 PERCENT MINIMUM AND 110 PERCENT MAXIMUM OF THE HEIGHT OF THE UPPERCASE LETTER "I".

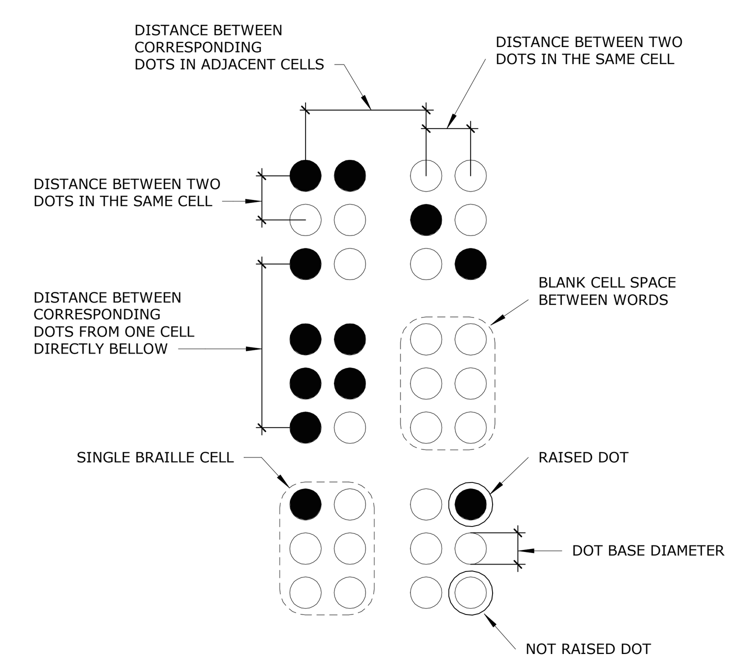

SIGNAGE REQUIREMENTS — SCALE: 6" = 1'-0" — 19

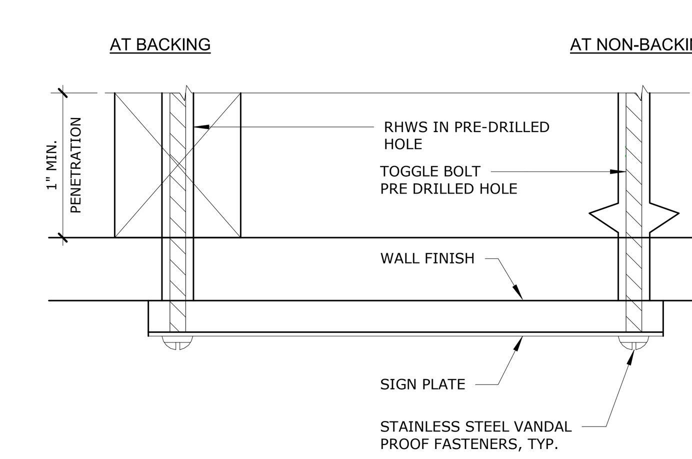

TYP. SIGN ATTACH AT WALL — SCALE: 12" = 1'-0" — 14

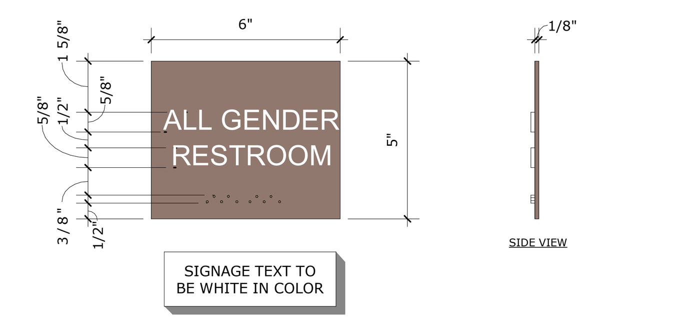

1/8" THICK NON-GLARE ACRYLIC. SUB-SURFACE PAINTED BACKGROUND COLOR TO BE CONFORMING TO FS. COLOR 15090 OF FED STD.595C

CALIFORNIA CONTRACTED GRADE 2 BRAILLE - RAISED 1/32" MIN. W/ DOMED DOTS

5/8" MIN. - 2" MAX. NEUTRA (SAN SERIF) UPPERCASE TEXT OF CONTRASTING COLOR - RAISED 1/32" MIN. ROWMARK TEXT & GRAPHICS. COLOR WHITE (311-201) SEE FLOOR PLAN FOR LOCATION. FOLLOW CBC 11B SECTIONS 703.1, 703.2, 703.3 & 703.5. AS REQUIRED.

FOR TYPICAL SIGNAGE MOUNTING HEIGHTS/LOCATION, REFER TO DETAIL: 12/AD-1.0

UNISEX WALL SIGN — SCALE: 3" = 1'-0" — 10

STAMPS

LICENSED ARCHITECT ROGER CLARKE No. C-21340 Exp. 10-31-23 STATE OF CALIFORNIA

IDENTIFICATION STAMP
DIV. OF THE STATE ARCHITECT
APP: 04-120895 INC:
REVIEWED FOR
SS ☑ FLS ☑ ACS ☑
DATE: 06/27/2022

CONSULTANT BRANDING

RUHNAU CLARKE ARCHITECTS

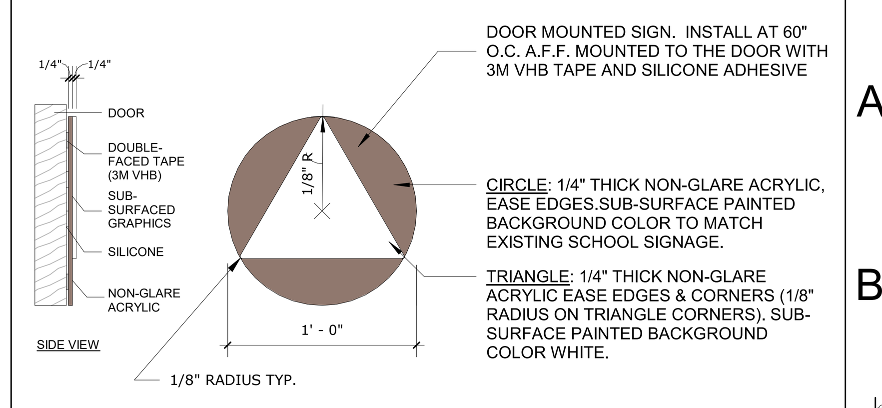

DOOR MOUNTED SIGN. INSTALL AT 60" O.C. A.F.F. MOUNTED TO THE DOOR WITH 3M VHB TAPE AND SILICONE ADHESIVE

CIRCLE: 1/4" THICK NON-GLARE ACRYLIC, EASE EDGES.SUB-SURFACE PAINTED BACKGROUND COLOR TO MATCH EXISTING SCHOOL SIGNAGE.

TRIANGLE: 1/4" THICK NON-GLARE ACRYLIC EASE EDGES & CORNERS (1/8" RADIUS ON TRIANGLE CORNERS). SUB-SURFACE PAINTED BACKGROUND COLOR WHITE.

NOTE:
ALL PICTOGRAMS, BACKGROUND COLOR, LETTERING AND BORDERS TO BE PAINTED ON INTERIOR FACE OF CLEAR PLASTIC.
BACKGROUND COLOR SHOULD CONTRAST THE DOOR COLOR.

FOR TYPICAL SIGNAGE MOUNTING HEIGHTS/LOCATION, REFER TO DETAIL: 12/AD-1.0

UNISEX DOOR SIGN SYMBOL — SCALE: 1 1/2" = 1'-0" — 9

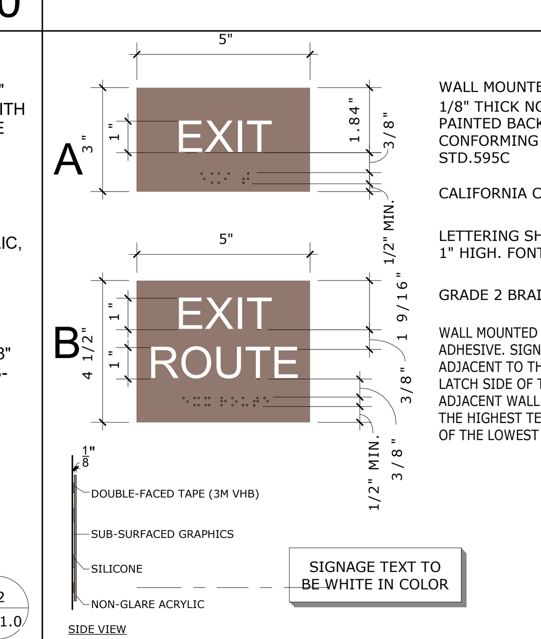

WALL MOUNTED SIGN
1/8" THICK NON-GLARE ACRYLIC SUB-SURFACE PAINTED BACKGROUND COLOR TO BE CONFORMING TO FS. COLOR 15090 OF FED STD.595C

CALIFORNIA CONTRACTED GRADE 2 BRAILLE.

LETTERING SHALL BE WHITE (311-201) & NO LESS THAN 1" HIGH. FONT TYPE: NEUTRA (SAN SERIF).

GRADE 2 BRAILLE 3/8" MIN. BELOW THE TEXT.

WALL MOUNTED WITH 3M VHB TAPE AND SILICONE ADHESIVE. SIGN SHALL BE MOUNTED ON THE WALL ADJACENT TO THE LATCH SIDE OF ADJACENT TO THE LATCH SIDE OF THE DOOR OR ON THE NEAREST ADJACENT WALL 60" MAX. A.F.F. TO THE BASELINE OF THE HIGHEST TEXT & 48" MIN. A.F.F. TO THE BASELINE OF THE LOWEST BRAILLE CELLS ABOVE THE FLOOR.

NOTES:
1. FOR WALL SIGN ATTACHMENT, MOUNTING HEIGHT/ LOCATION, REFER TO DETAIL: 1/AD-1.0
2. FOR ADDITIONAL SIGNAGE REQUIREMENTS, REFER TO DETAIL: 19/AD-1.0

ACCESS/ EXIT SIGNS — SCALE: 1 1/2" = 1'-0" — 4

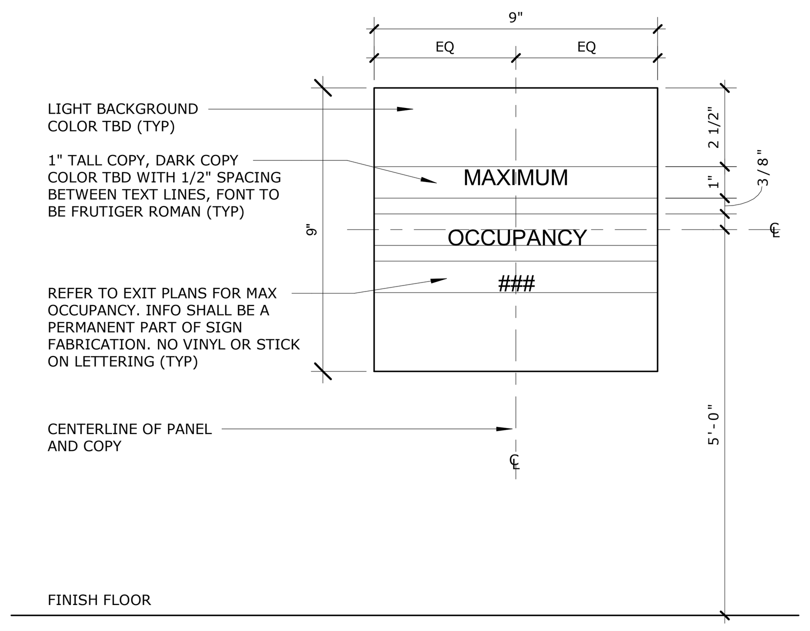

OCCUPANCY SIGNAGE — SCALE: 3" = 1'-0" — 18

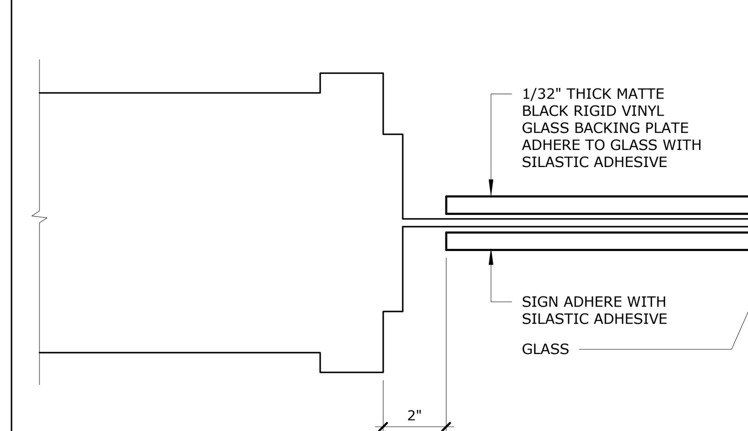

TYP. ATTACHMENT @ GLASS — SCALE: 3" = 1'-0" — 13

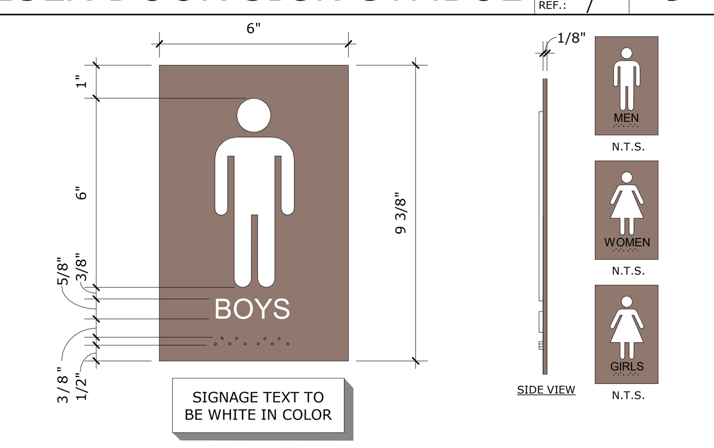

1/8" THICK NON-GLARE ACRYLIC. SUB-SURFACE PAINTED BACKGROUND COLOR TO BE CONFORMING TO FS. COLOR 15090 OF FED STD.595C

CALIFORNIA CONTRACTED GRADE 2 BRAILLE - RAISED 1/32" MIN. W/ DOMED DOTS

5/8" MIN. - 2" MAX. NEUTRA UPPERCASE TEXT OF CONTRASTING COLOR - RAISED 1/32" MIN. ROWMARK TEXT & GRAPHICS. COLOR WHITE (311-201) SEE FLOOR PLAN FOR LOCATION. FOLLOW CBC 11B SECTIONS 703.1, 703.2, 703.3 & 703.5. AS REQUIRED.

FOR TYPICAL SIGNAGE MOUNTING HEIGHTS/LOCATION, REFER TO DETAIL: 12/AD-1.0

RESTROOM WALL SIGN — SCALE: 3" = 1'-0" — 8

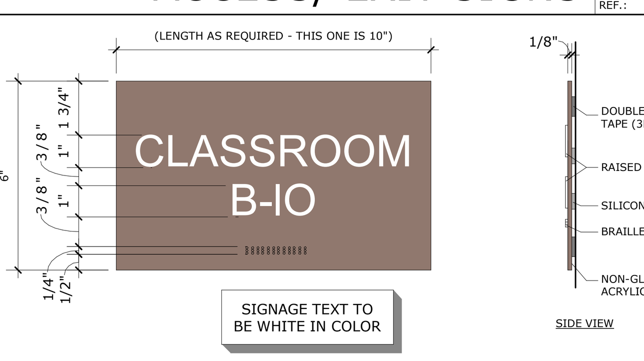

WALL MOUNTED ROOM ID SIGN

1/8" THICK NON-GLARE ACRYLIC. SUB-SURFACED PAINTED BACKGROUND COLOR TO MATCH EXISTING SCHOOL CLASSROOM SIGNAGE.

1/32" RAISED ROWMARK TEXT. COLOR WHITE (311-201).
FONT TYPE NEUTRA.
CALIFORNIA CONTRACTED GRADE 2 BRAILLE.

INSTALL AT:
48" MIN. A.F.F. TO BASELINE OF LOWEST LINE OF BRAILLE.
60" MAX A.F.F. TO BASELINE OF UPPERMOST LINE OF RAISED TEXT.
SEE FLOOR PLAN FOR LOCATION. FOLLOW CBC 11B-703 AS REQUIRED.

NOTES:
1. FOR WALL SIGN ATTACHMENT, MOUNTING HEIGHT/ LOCATION, REFER TO DETAIL: 1/AD-1.0
2. FOR ADDITIONAL SIGNAGE REQUIREMENTS, REFER TO DETAIL: 19/AD-1.0

ROOM SIGN — SCALE: 3" = 1'-0" — 3

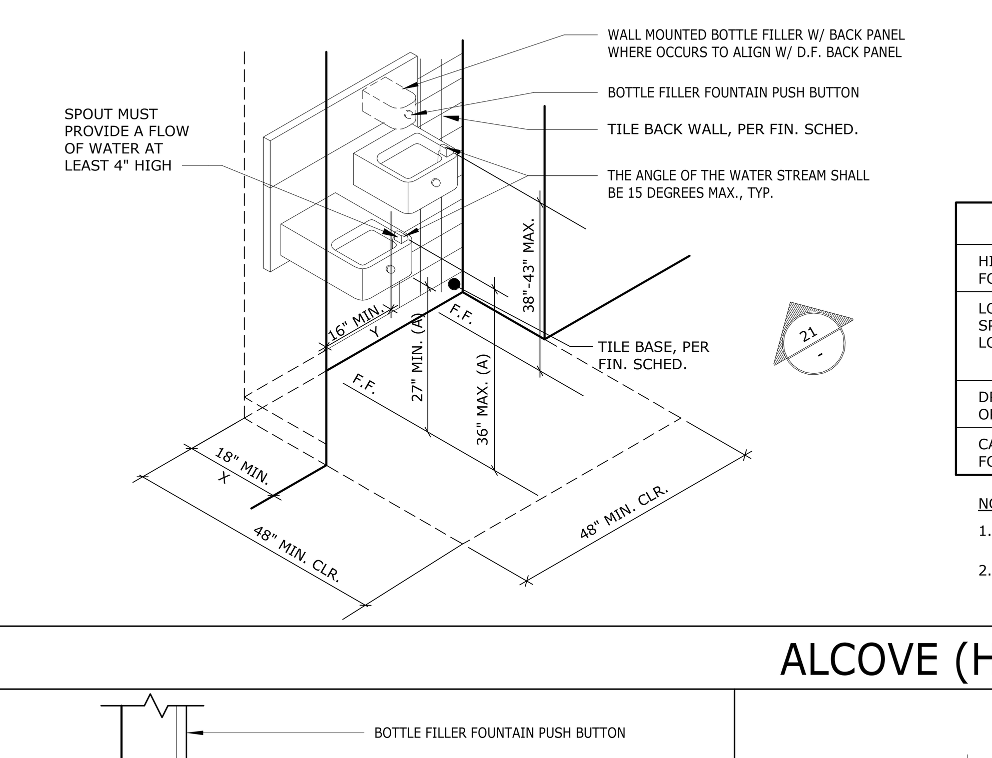

MOUNTING HEIGHTS	ADULTS (A)	2019 CBC REFERENCE
HIGH DRINKING FOUNTAIN SPOUT HEIGHT	38"-43"	S 11B-602.7
LOW DRINKING FOUNTAIN SPOUT HEIGHT & LOCATION	36" MAX A.F.F. & 5" MAX FROM FRONT EDGE OF UNIT	S 11B-602.7 ***EXCEPTION*** S 11B-602.4 S 11B-602.5
DRINKING FOUNTAIN OPERABLE PARTS	5" MAX FROM FRONT EDGE OF UNIT	S 11B-602.3
CANTILEVER DRINKING FOUNTAIN PROJECTION	18"-19"	S 11B-602.8

NOTE:
1. IF "X" IS GREATER THAN 24" THEN "Y" SHALL BE 18" MIN
2. FORCE TO ACTIVATE CONTROLS NOT TO EXCEED 5LBS

ALCOVE (HI-LOW FOUNTAIN) — SCALE: 1/2" = 1'-0" — 22

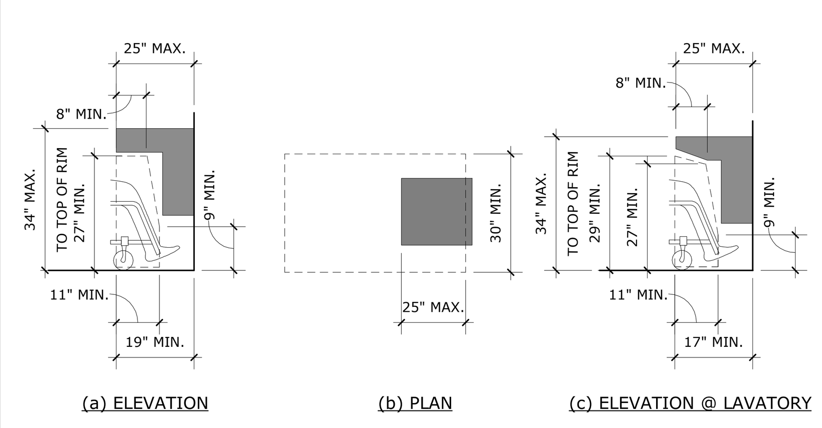

KNEE CLEARANCE — SCALE: 3/8" = 1'-0" — 17

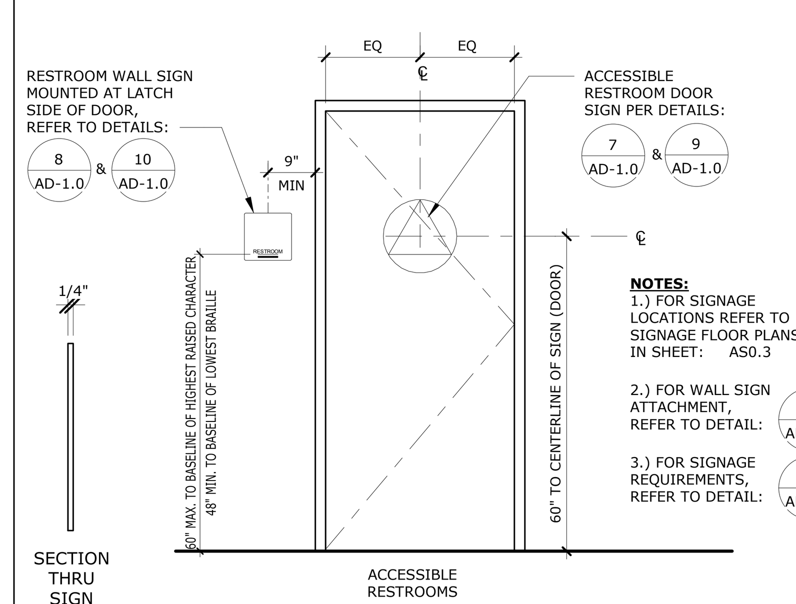

NOTES:
1.) FOR SIGNAGE LOCATIONS REFER TO SIGNAGE FLOOR PLANS IN SHEET: AS0.3
2.) FOR WALL SIGN ATTACHMENT, REFER TO DETAIL: 14/AD-1.0
3.) FOR SIGNAGE REQUIREMENTS, REFER TO DETAIL: 19/AD-1.0

RESTROOM SIGNAGE — SCALE: 1/2" = 1'-0" — 12

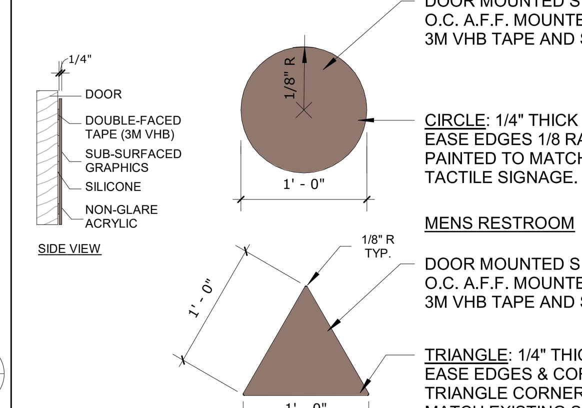

WOMENS RESTROOM

DOOR MOUNTED SIGN. INSTALL AT 60" O.C. A.F.F. MOUNTED TO THE DOOR WITH 3M VHB TAPE AND SILICONE ADHESIVE

CIRCLE: 1/4" THICK NON-GLARE ACRYLIC, EASE EDGES 1/8 RADIUS. SUB-SURFACE PAINTED TO MATCH EXISTING SCHOOL TACTILE SIGNAGE.

MENS RESTROOM

DOOR MOUNTED SIGN. INSTALL AT 60" O.C. A.F.F. MOUNTED TO THE DOOR WITH 3M VHB TAPE AND SILICONE ADHESIVE

TRIANGLE: 1/4" THICK NON-GLARE ACRYLIC, EASE EDGES & CORNERS (1/8 RADIUS ON TRIANGLE CORNERS.SUB-SURFACE PAINTED TO MATCH EXISTING SCHOOL TACTILE SIGNAGE.

NOTES:
ALL PICTOGRAMS, BACKGROUND COLOR, LETTERING AND BORDERS TO BE PAINTED ON INTERIOR FACE OF CLEAR PLASTIC. CIRCLE BACKGROUND COLOR SHALL CONTRAST THE DOOR COLOR. TRIANGLE BACKGROUND COLOR SHALL CONTRAST W/ CIRCLE COLOR.

FOR TYPICAL SIGNAGE MOUNTING HEIGHTS/LOCATION, REFER TO DETAIL: 12/AD-1.0

RR DOOR SIGN SYMBOLS — SCALE: 1" = 1'-0" — 7

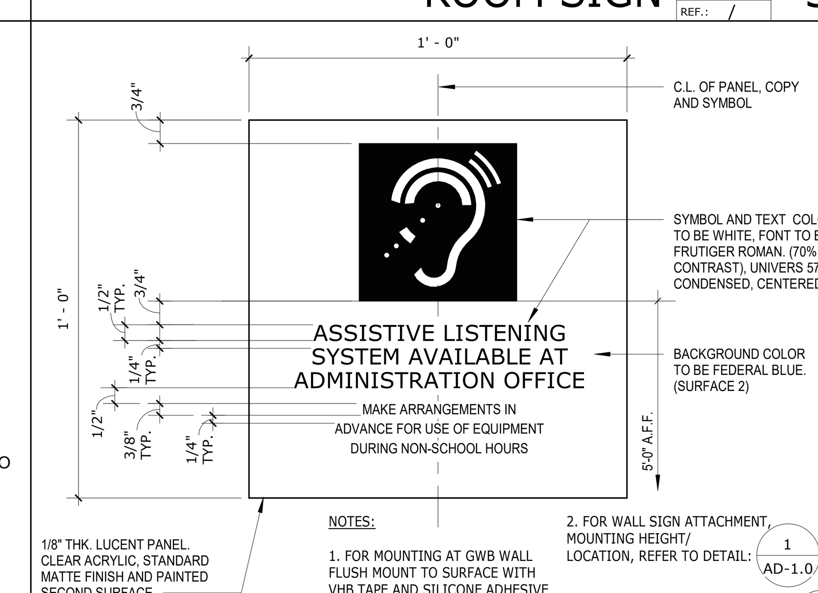

NOTES:
1. FOR MOUNTING AT GWB WALL FLUSH MOUNT TO SURFACE WITH VHB TAPE AND SILICONE ADHESIVE (NO SCREWS NEEDED)
2. FOR WALL SIGN ATTACHMENT, MOUNTING HEIGHT/ LOCATION, REFER TO DETAIL: 1/AD-1.0
3. FOR ADDITIONAL SIGNAGE REQUIREMENTS, REFER TO DETAIL: 19/AD-1.0

ASSISTIVE LISTENING SIGN — SCALE: 3" = 1'-0" — REF.: 1/AD-1.0 — 2

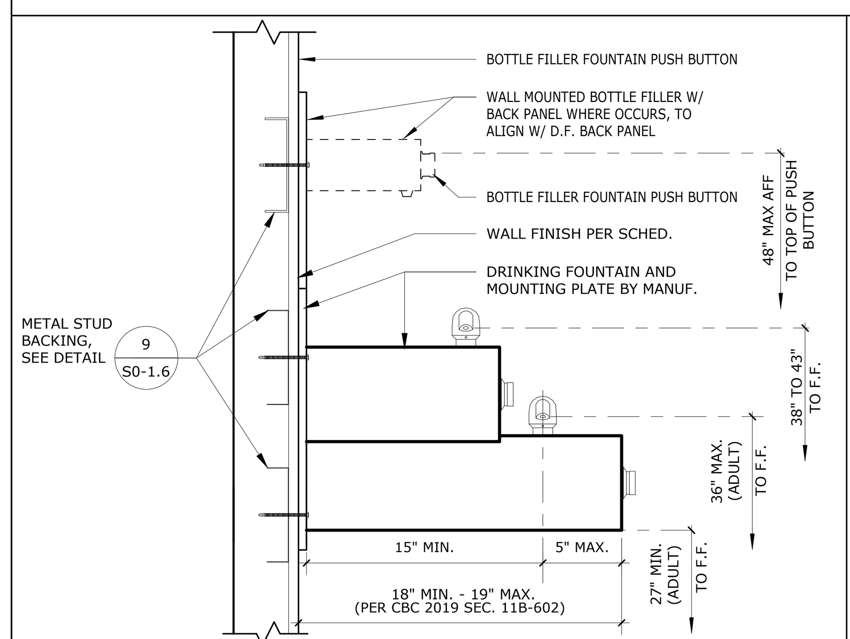

DRINKING FOUNTAIN ATTACH. — SCALE: 1 1/2" = 1'-0" — REF.: 21/AD-1.0 — 26

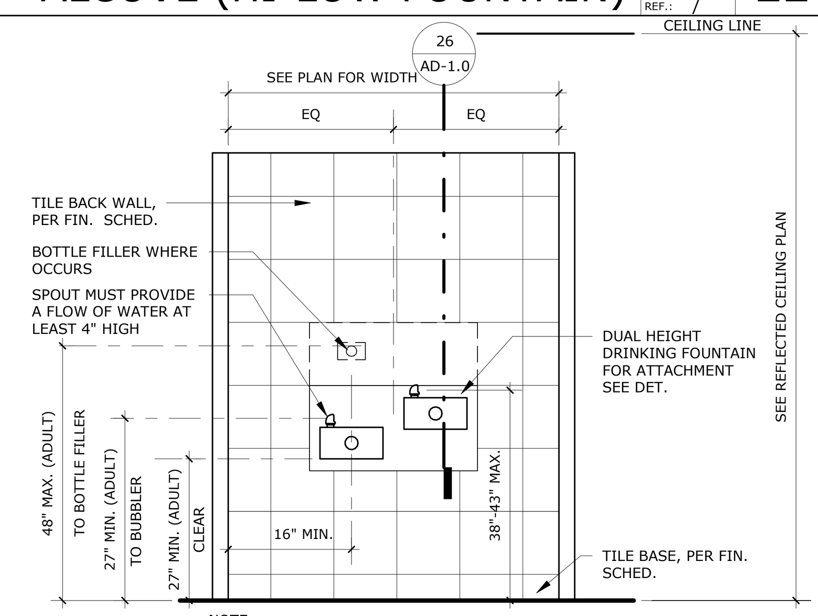

NOTE:
FORCE TO ACTIVATE CONTROLS NOT TO EXCEED 5LBS

HI-LOW FOUNTAIN — SCALE: 1/2" = 1'-0" — 21

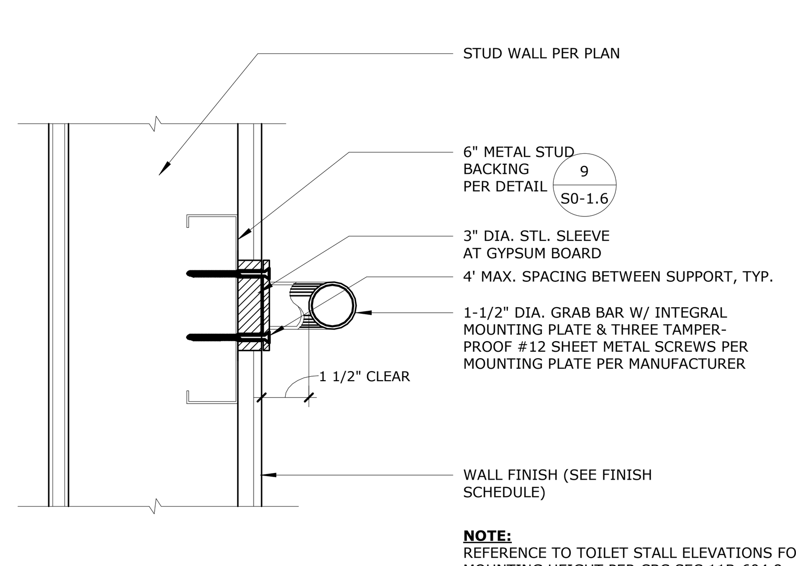

NOTE:
REFERENCE TO TOILET STALL ELEVATIONS FOR MOUNTING HEIGHT PER CBC SEC 11B-604.8

GRAB BAR — SCALE: 3" = 1'-0" — 16

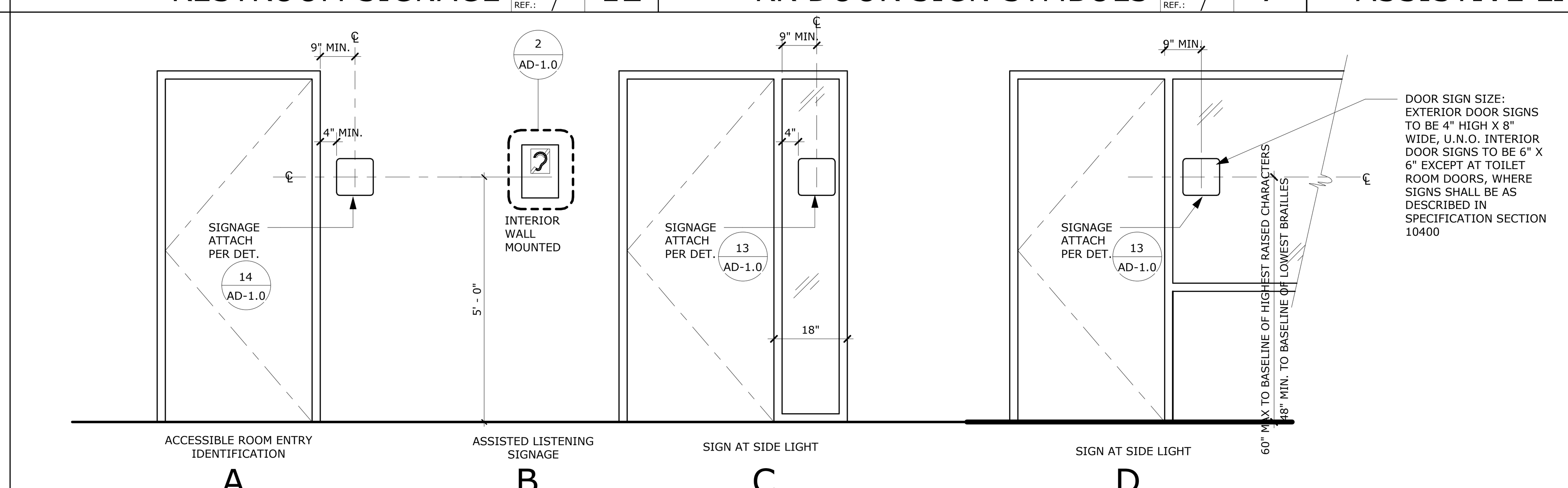

NOTES

1. SIGNS TO BE LOCATED ADJACENT TO LATCH SIDE OF DOOR.
2. WHERE NO SPACE ON LATCH SIDE IS AVAILABLE, SIGNS TO BE LOCATED AT NEAREST ADJACENT WALL.
3. SIGNS TO BE LOCATED ON APPROACH SIDE OF DOOR AS ONE ENTERS ROOM OR SPACE.
4. SIGNS THAT IDENTIFY EXISTS ARE TO BE LOCATED ON APPROACH SIDE OF DOOR AS ONE EXITS ROOM TO SPACE.
5. MOUNTING HEIGHTS SHALL BE 60" MAX. TO BASELINE OF HIGHEST RAISED CHARACTERS AND 48" MIN. TO BASELINE OF LOWEST BRAILLE CELLS.
6. SIGNS CONTAINING TACTILE CHARACTERS SHALL BE LOCATED SO THAT THERE IS AN 18" BY 18" MINIMUM CLEAR FLOOR SPACE, CENETERED ON THE TACTILE CHARACTERS, BEYOND THE ARC OF ANY DOOR SWING BETWEEN THE CLOSED POSITION AND 45 DEGREE OPEN POSITION.
7. REFER TO EGRESS PLANS FOR SIGNAGE TYPE & LOCATION IN SHEET **AS0.3**

WALL SIGN MOUNTING HEIGHTS & LOCATIONS — SCALE: 1/2" = 1'-0" — 1

GHS KITCHEN & WEIGHTROOM: 06/13/2022 DSA SUBMITTAL

PROJECT No. :1-30-55
6/21/2022 3:16:14 PM

DRAWN BY: CHECKED BY:
ISSUE No.___ DATE___ DESCRIPTION___ (×4)
REVISION No.___ DATE___ DESCRIPTION___ (×4)

RUHNAUCLARKE.COM
3775 TENTH STREET, RIVERSIDE CALIFORNIA 92501 (951) 684 4664 / 5751 PALMER WAY, SUITE C, CARLSBAD CALIFORNIA 92010 (760) 438 5899

GHS KITCHEN & WEIGHTROOM
GROSSMONT HIGH SCHOOL
1100 MURRAY DR, EL CAJON, CA 92020
GROSSMONT UNION HIGH SCHOOL

DETAILS ACCESSIBILITY & SIGNAGE DETAILS

AD-1.0

1-30-55

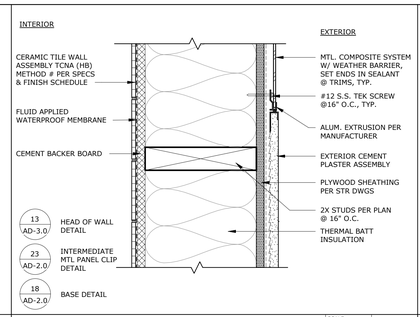

EXT. WALL TYPE A3.1 | SCALE: 3" = 1'-0" | REF.: / | 25

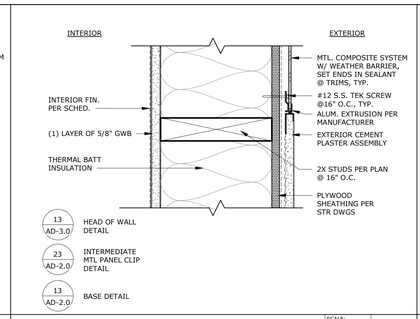

EXT. WALL TYPE A1.1 | SCALE: 3" = 1'-0" | REF.: / | 20

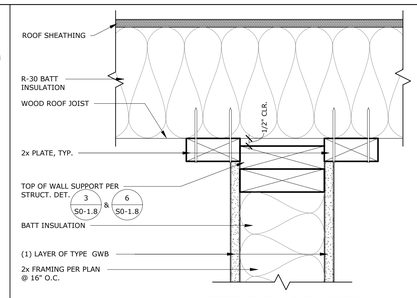

PERPENDICULAR TO JOISTS

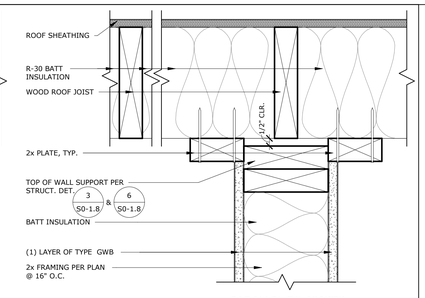

PARALLEL TO JOISTS

HEAD OF FULL HT. WALL | SCALE: 3" = 1'-0" | REF.: 4/A2-5.0 | 10

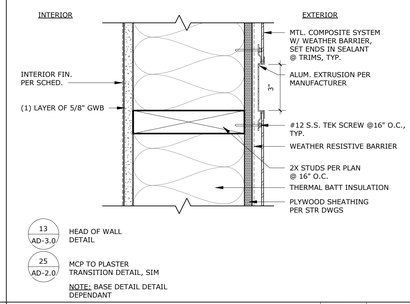

EXT. MCP WALL W/ 3" REVEAL | SCALE: 3" = 1'-0" | REF.: 7/A1-4.0 | 24

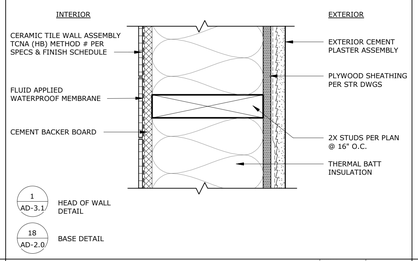

EXT. WALL TYPE A3 | SCALE: 3" = 1'-0" | REF.: / | 19

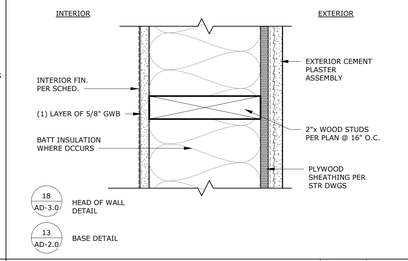

EXT. WALL TYPE A1 | SCALE: 3" = 1'-0" | REF.: / | 14

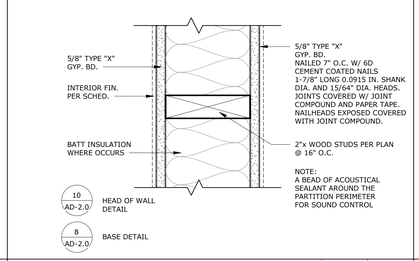

INT. WALL TYPE B1 | SCALE: 3" = 1'-0" | REF.: / | 9

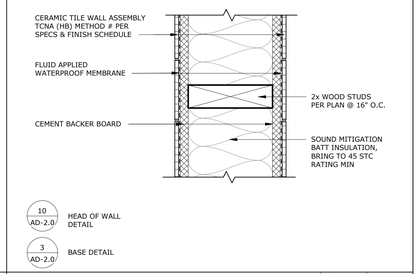

INT. WALL TYPE C2 | SCALE: 3" = 1'-0" | REF.: / | 4

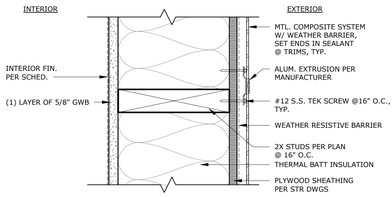

EXT. MCP WALL W/O REVEAL | SCALE: 3" = 1'-0" | REF.: 7/A1-4.0 | 28

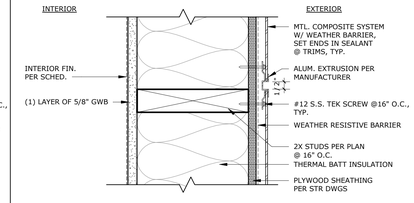

EXT. MCP WALL W/ REVEAL | SCALE: 3" = 1'-0" | REF.: 7/A1-4.0 | 23

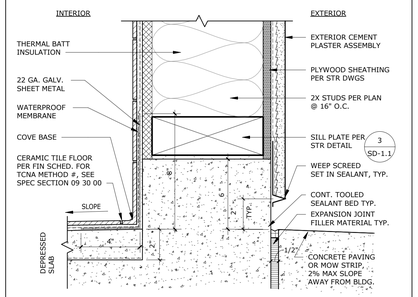

EXT. WALL BASE A3 | SCALE: 3" = 1'-0" | REF.: 5/A1-6.0 | 18

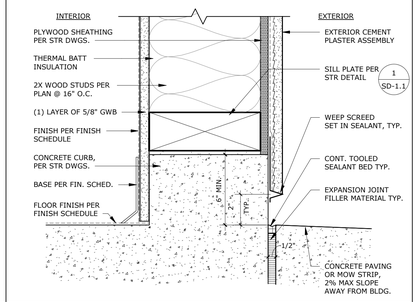

EXT. WALL BASE A1 | SCALE: 3" = 1'-0" | REF.: 1/A1-6.0 | 13

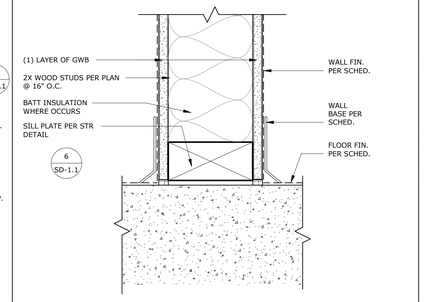

INT. WALL BASE B1 | SCALE: 3" = 1'-0" | REF.: / | 8

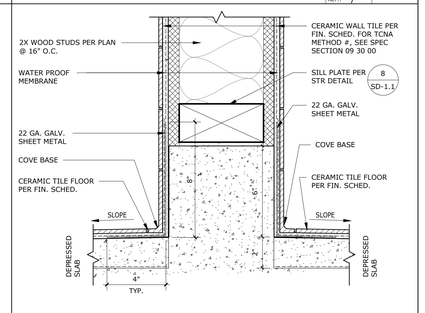

INT. WALL BASE C2 | SCALE: 3" = 1'-0" | REF.: / | 3

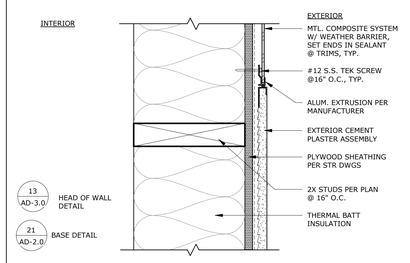

EXT. WALL TYPE A4 | SCALE: 3" = 1'-0" | REF.: 7/A1-4.0 | 22

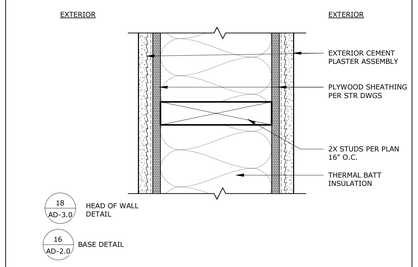

EXT. WALL TYPE A2 | SCALE: 3" = 1'-0" | REF.: / | 17

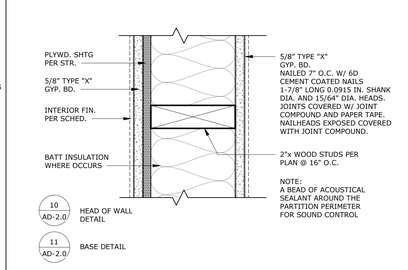

INT. WALL TYPE B2 | SCALE: 3" = 1'-0" | REF.: / | 12

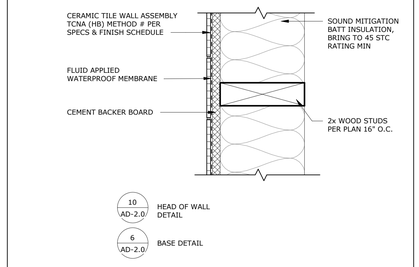

INT. WALL TYPE C3 | SCALE: 3" = 1'-0" | REF.: / | 7

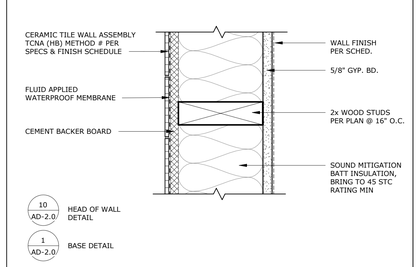

INT. WALL TYPE C1 | SCALE: 3" = 1'-0" | REF.: / | 2

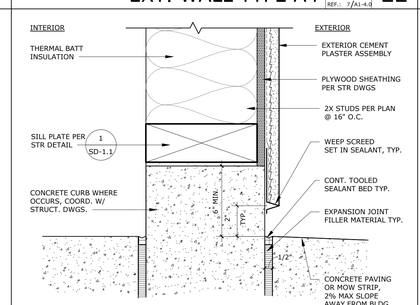

EXT. WALL BASE A4 | SCALE: 3" = 1'-0" | REF.: / | 21

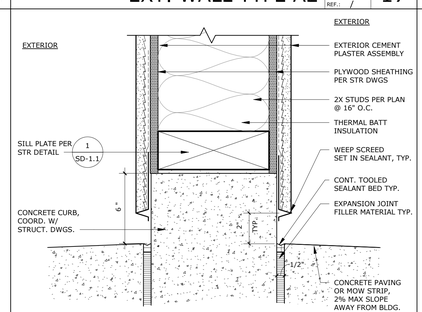

EXT. WALL BASE A2 | SCALE: 3" = 1'-0" | REF.: / | 16

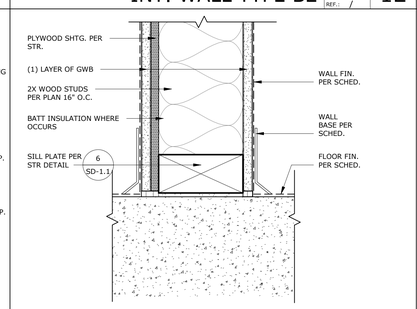

INT. WALL BASE B2 | SCALE: 3" = 1'-0" | REF.: / | 11

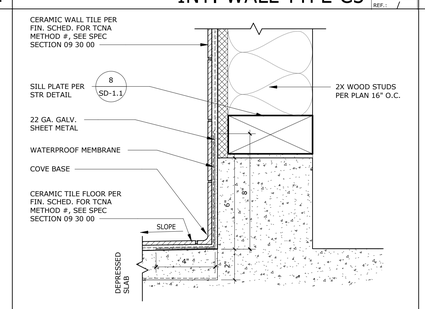

INT. WALL BASE C3 | SCALE: 3" = 1'-0" | REF.: / | 6

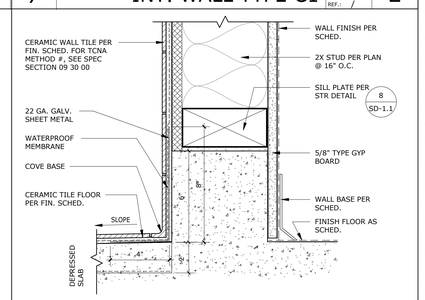

INT. WALL BASE C1 | SCALE: 3" = 1'-0" | REF.: / | 1

STAMPS

LICENSED ARCHITECT, REGISTERED PROFESSIONAL ENGINEER, CLARKE, No. C-31940, Exp. 12/31/22, STATE OF CALIFORNIA

IDENTIFICATION STAMP
DIV. OF THE STATE ARCHITECT
APP: 04-120895 INC:
REVIEWED FOR
SS ☑ FLS ☑ ACS ☑
DATE: 06/27/2022

CONSULTANT BRANDING

RUHNAU CLARKE ARCHITECTS

GHS KITCHEN & WEIGHTROOM: 06/13/2022 DSA SUBMITTAL

PROJECT No. :1-30-55
6/21/2022 3:16:18 PM

DRAWN BY: CHECKED BY:

ISSUE No.____	DATE_____	DESCRIPTION_____	REVISION No.____	DATE_____	DESCRIPTION_____
ISSUE No.____	DATE_____	DESCRIPTION_____	REVISION No.____	DATE_____	DESCRIPTION_____
ISSUE No.____	DATE_____	DESCRIPTION_____	REVISION No.____	DATE_____	DESCRIPTION_____
ISSUE No.____	DATE_____	DESCRIPTION_____	REVISION No.____	DATE_____	DESCRIPTION_____

RUHNAUCLARKE.COM
3775 TENTH STREET, RIVERSIDE CALIFORNIA 92501 (951) 684 4664 / 5751 PALMER WAY, SUITE C, CARLSBAD CALIFORNIA 92010 (760) 438 5899

GHS KITCHEN & WEIGHTROOM
GROSSMONT HIGH SCHOOL
1100 MURRAY DR, EL CAJON, CA 92020
GROSSMONT UNION HIGH SCHOOL

DETAILS
WALL TYPES

AD-2.0

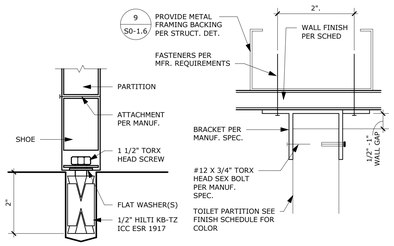

FLOOR ANCHOR DETAIL

WALL ANCHOR DETAIL

NOTE: REFER TO MANUFACTURER'S INSTALLATION MANUAL FOR SPECIFIC HARDWARE AND ATTACHMENT.

T. PARTITION ANCHORAGE

SCALE: 6" = 1'-0" REF.: / 10

STAMPS

LICENSED ARCHITECT JAMES CLARKE No. C-31940 Exp. 12/31/22 STATE OF CALIFORNIA

IDENTIFICATION STAMP
DIV. OF THE STATE ARCHITECT
APP: 04-120895 INC:
REVIEWED FOR
SS ☑ FLS ☑ ACS ☑
DATE: 06/27/2022

AGENCY
File No.

CONSULTANT BRANDING

RUHNAU CLARKE ARCHITECTS

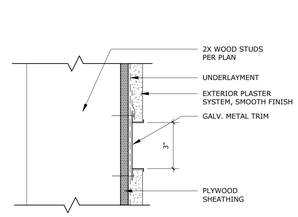

EXT. CPL MTL REVEAL

SCALE: 3" = 1'-0" REF.: / 9

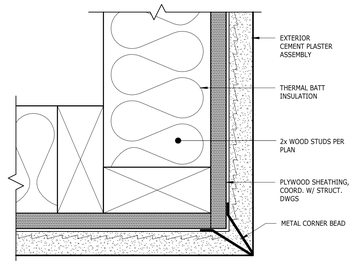

PLAN VIEW

EXT. CPL @ OUTSIDE CORNER

SCALE: 6" = 1'-0" REF.: / 4

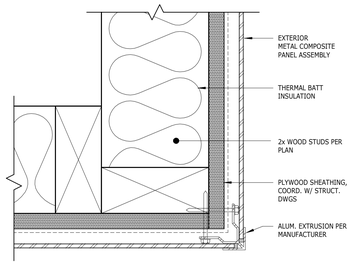

PLAN VIEW

EXT. MCP @ OUTSIDE CORNER

SCALE: 6" = 1'-0" REF.: 7/A1-4.0 13

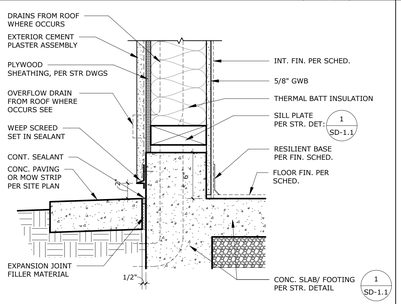

EXT. CONCRETE CURB @ CPL

SCALE: 1 1/2" = 1'-0" REF.: 4/A1-6.0 5

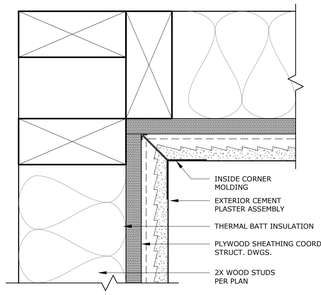

PLAN VIEW

EXT. CPL @ INSIDE CORNER

SCALE: 6" = 1'-0" REF.: / 3

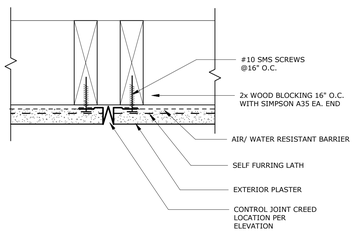

VERTICAL REVEAL

(PLAN VIEW)

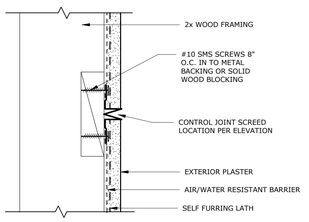

HORIZONTAL REVEAL

(SECTION VIEW)

TYP CPL CONTROL JOINTS

SCALE: 3" = 1'-0" REF.: / 11

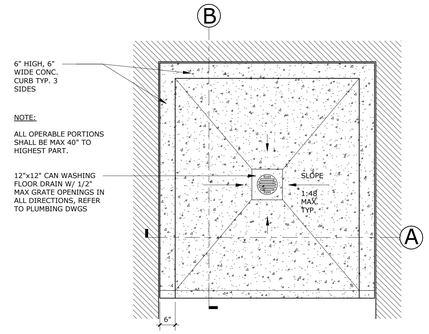

PLAN VIEW

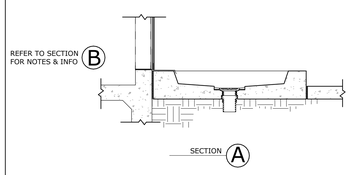

NOTE:

ALL OPERABLE PORTIONS OF FAUCET SHALL BE MAX. 48" AFF. TO THE HIGHEST PART. PROVIDE LEVER TYPE FAUCET.

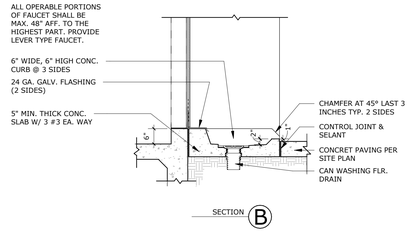

SECTION A

SECTION B

CAN WASH

SCALE: 1/2" = 1'-0" REF.: 1/A2-1.0 1

GHS KITCHEN & WEIGHTROOM: 06/13/2022 DSA SUBMITTAL

PROJECT No. :1-30-55
6/21/2022 3:16:20 PM

DRAWN BY: CHECKED BY:

ISSUE No.____ DATE____ DESCRIPTION____
ISSUE No.____ DATE____ DESCRIPTION____
ISSUE No.____ DATE____ DESCRIPTION____
ISSUE No.____ DATE____ DESCRIPTION____

REVISION No.____ DATE____ DESCRIPTION____
REVISION No.____ DATE____ DESCRIPTION____
REVISION No.____ DATE____ DESCRIPTION____
REVISION No.____ DATE____ DESCRIPTION____

RUHNAUCLARKE.COM

3775 TENTH STREET, RIVERSIDE CALIFORNIA 92501 (951) 684-4664 / 5751 PALMER WAY, SUITE C, CARLSBAD CALIFORNIA 92010 (760) 438 5899

GHS KITCHEN & WEIGHTROOM

GROSSMONT HIGH SCHOOL
1100 MURRAY DR, EL CAJON, CA 92020
GROSSMONT UNION HIGH SCHOOL

WALL DETAILS

AD-2.1

1-30-55

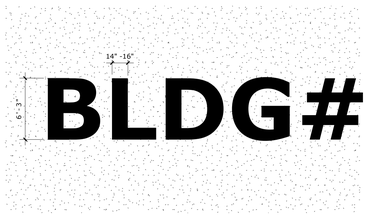

NOTE: BUILDING NUMBER PAINT TO BE IN CONTRAST WITH ROOF COLOR.

BUILDING I.D. PAINT ON ROOF — SCALE: 1/4" = 1'-0" — REF.: / — 30

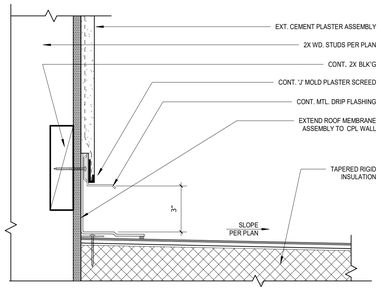

CPL WALL/ROOF TRANSITION — SCALE: 3" = 1'-0" — REF.: 21/AD-3.0 — 25

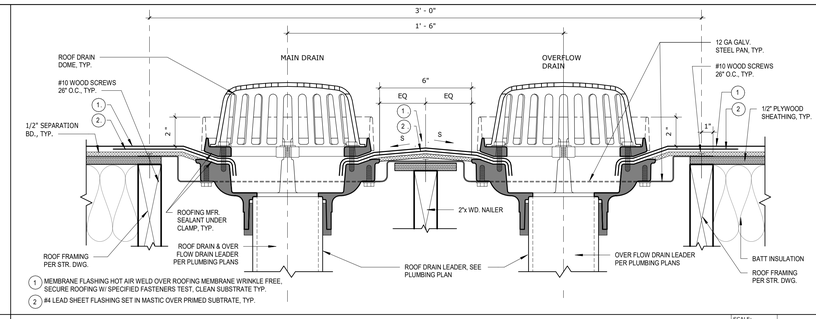

ROOF DRAIN SECTION — SCALE: 3" = 1'-0" — REF.: 10/AD-3.0 — 15

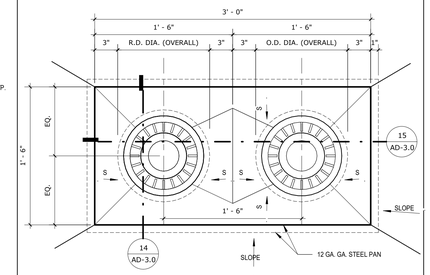

ROOF DRAIN PLAN — SCALE: 1 1/2" = 1'-0" — REF.: / — 10

STAMPS

LICENSED ARCHITECT — REGISTERED OWNER — No. C-31040 — Exp. 12/31/22 — STATE OF CALIFORNIA

IDENTIFICATION STAMP
DIV. OF THE STATE ARCHITECT
APP: 04-120895 INC:
REVIEWED FOR
SS ☑ FLS ☑ ACS ☑
DATE: 06/27/2022

CONSULTANT BRANDING

RUHNAU CLARKE ARCHITECTS

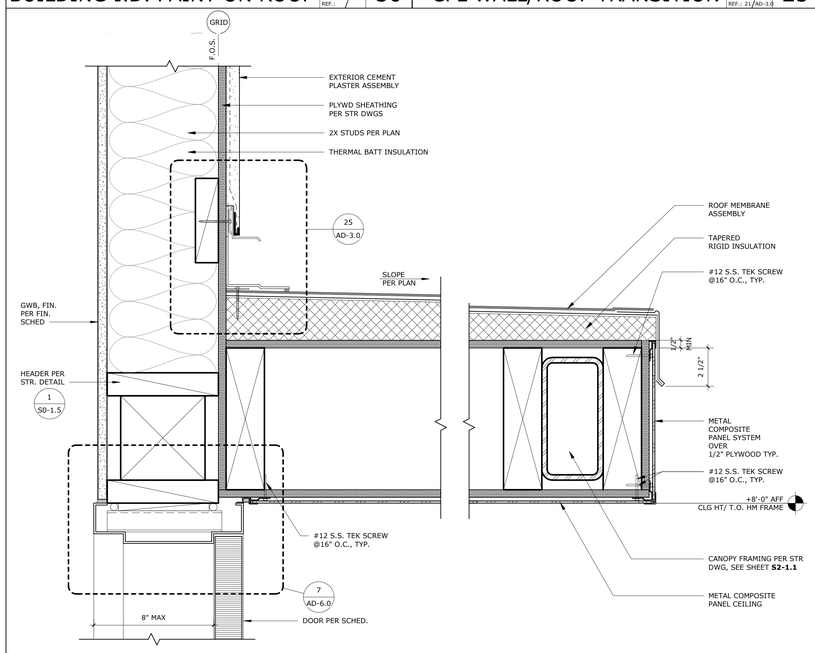

CANOPY SECTION @ HM DOOR HEAD — SCALE: 3" = 1'-0" — REF.: 3/A2-6.0 — 23

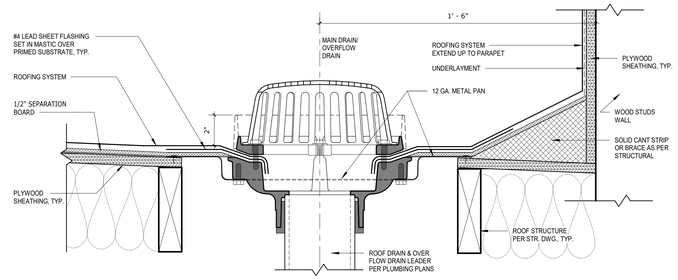

ROOF DRAIN SECT W/FLASHING — SCALE: 3" = 1'-0" — REF.: 10/AD-3.0 — 14

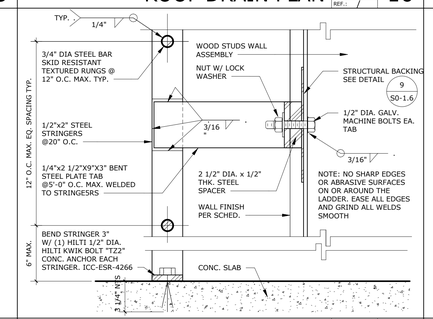

LADDER ANCHOR — SCALE: 3" = 1'-0" — REF.: 6/AD-3.0 — 9

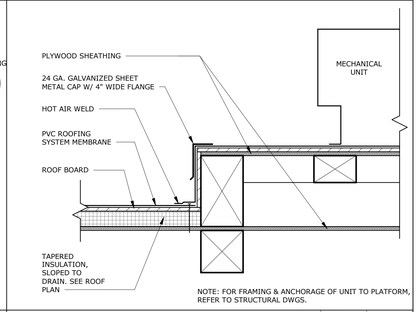

MECHANICAL PLATFORM — SCALE: 1 1/2" = 1'-0" — REF.: / — 4

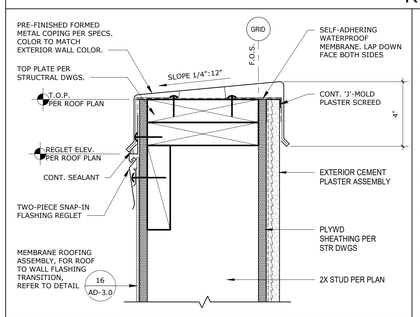

PARAPET CAP @ CPL — SCALE: 3" = 1'-0" — REF.: 2/A1-6.0 — 18

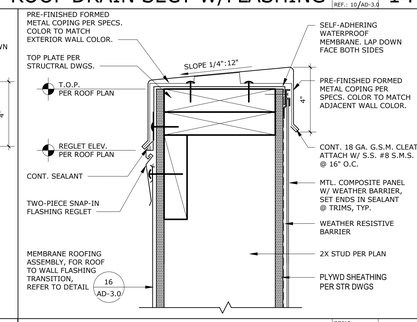

PARAPET CAP @ MCP — SCALE: 3" = 1'-0" — REF.: 7/A1-4.0 — 13

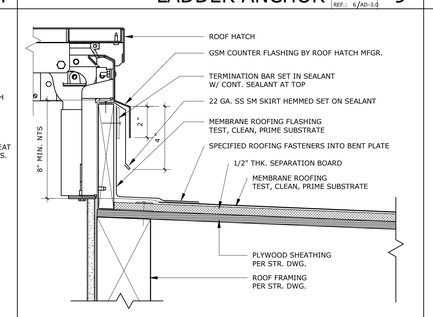

ROOF HATCH CURB FLASHING — SCALE: 3" = 1'-0" — REF.: 6/AD-3.0 — 8

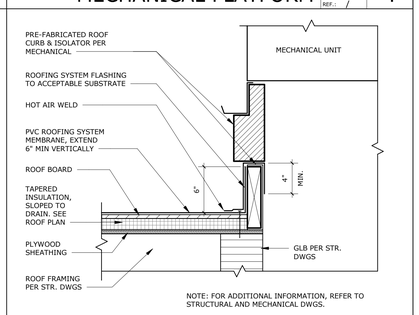

MECHANICAL CURB FLASHING — SCALE: 1 1/2" = 1'-0" — REF.: 1/A2-5.0 — 3

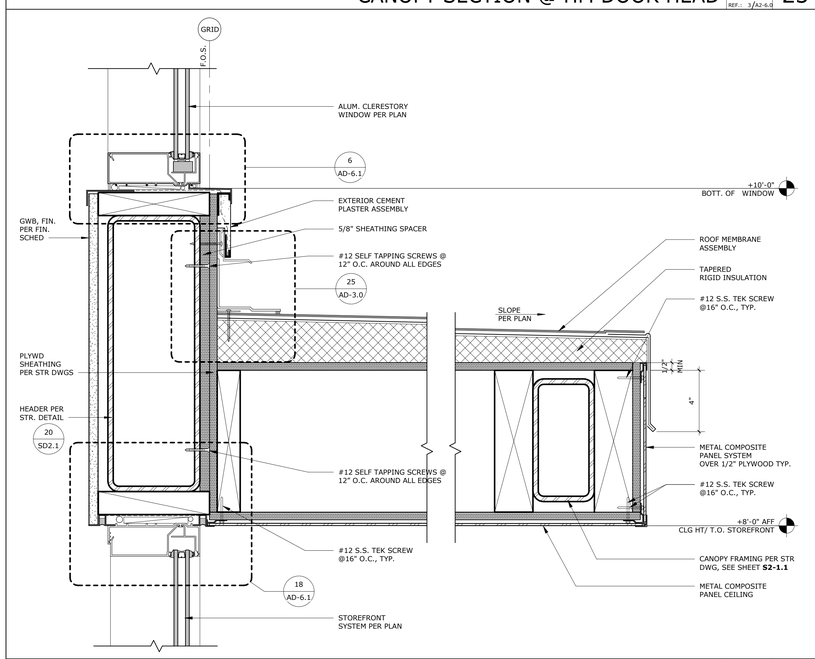

CANOPY SECTION @ STOREFRONT — SCALE: 3" = 1'-0" — REF.: 1/A2-6.0 — 21

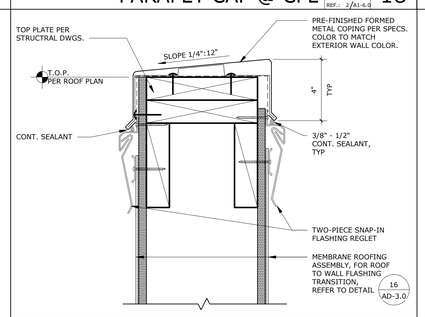

PARAPET CAP @ ROOF — SCALE: 3" = 1'-0" — REF.: 3/A2-5.0 — 17

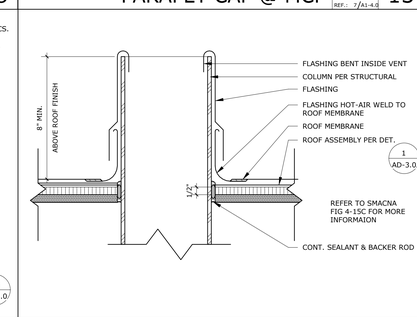

PIPE PENETRATION — SCALE: 3" = 1'-0" — REF.: / — 12

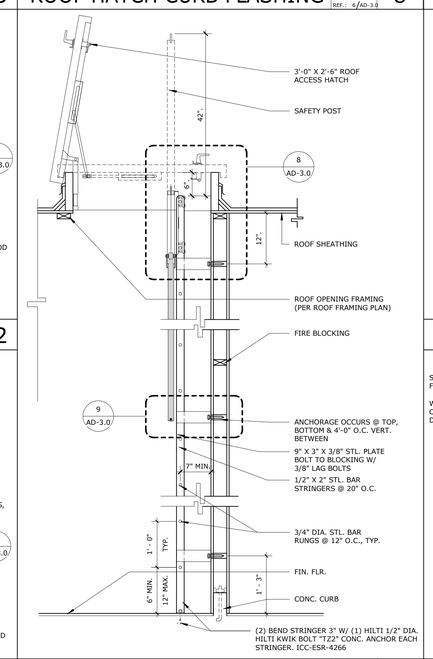

ROOF ACCESS HATCH SECT. — SCALE: 3/4" = 1'-0" — REF.: / — 6

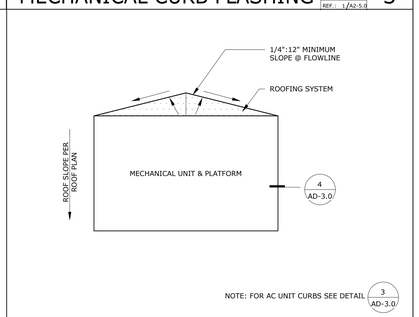

TYP CRICKET @ MECH UNIT — SCALE: 1 1/2" = 1'-0" — REF.: / — 2

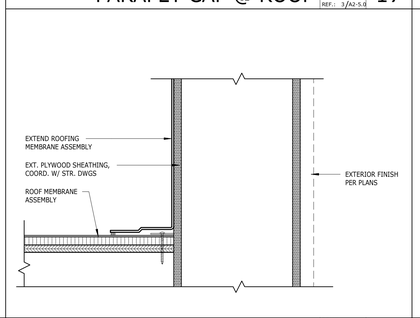

PARAPET FLASHING @ ROOF — SCALE: 3" = 1'-0" — REF.: 1/A2-6.0 — 16

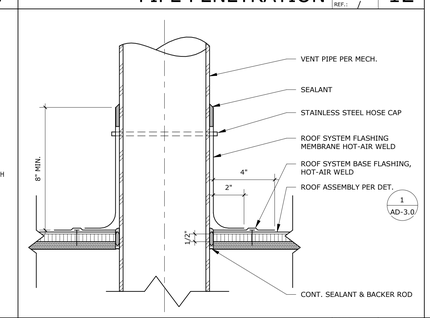

TYP. PIPE PENETRATION — SCALE: 3" = 1'-0" — REF.: / — 11

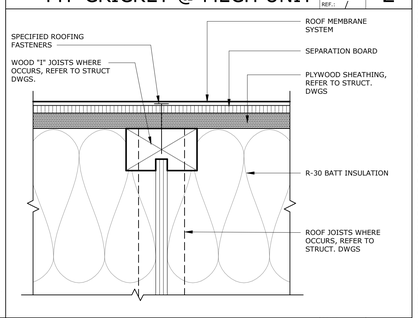

TYP ROOF ASSEMBLY — SCALE: 6" = 1'-0" — REF.: / — 1

GHS KITCHEN & WEIGHTROOM: 06/13/2022 DSA SUBMITTAL

PROJECT No. :1-30-55
6/21/2022 3:16:21 PM

DRAWN BY: CHECKED BY:

ISSUE No.____	DATE____	DESCRIPTION____	REVISION No.____	DATE____	DESCRIPTION____
ISSUE No.____	DATE____	DESCRIPTION____	REVISION No.____	DATE____	DESCRIPTION____
ISSUE No.____	DATE____	DESCRIPTION____	REVISION No.____	DATE____	DESCRIPTION____
ISSUE No.____	DATE____	DESCRIPTION____	REVISION No.____	DATE____	DESCRIPTION____

RUHNAUCLARKE.COM
3775 TENTH STREET, RIVERSIDE CALIFORNIA 92501 (951) 684 4664 / 5751 PALMER WAY, SUITE C, CARLSBAD CALIFORNIA 92010 (760) 438 5899

GHS KITCHEN & WEIGHTROOM
GROSSMONT HIGH SCHOOL
1100 MURRAY DR, EL CAJON, CA 92020
GROSSMONT UNION HIGH SCHOOL

DETAILS
ROOF DETAILS

AD-3.0

1-30-55

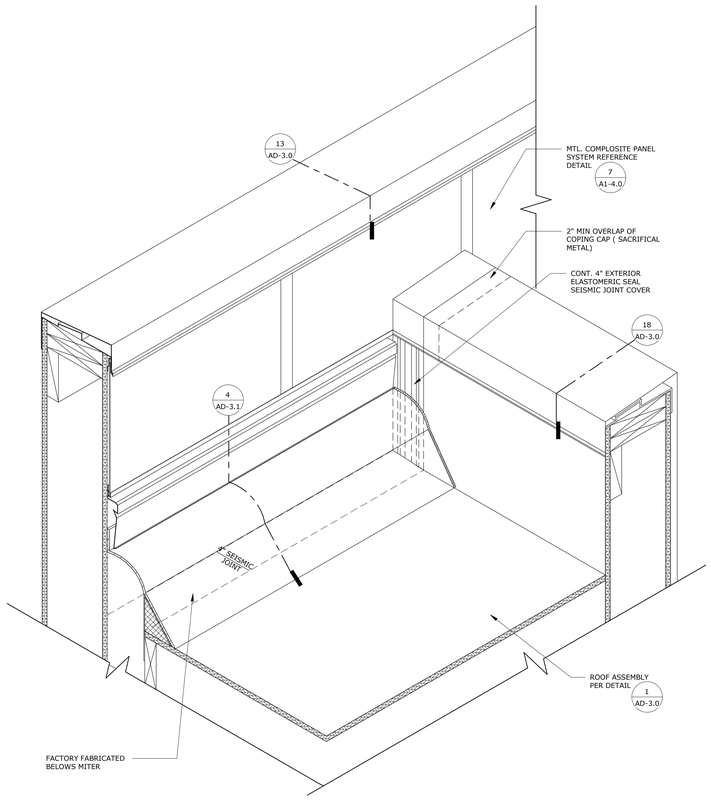

SEISMIC JOINT @ BREEZEWAY SCALE: 1 1/2" = 1'-0" REF.: / 5

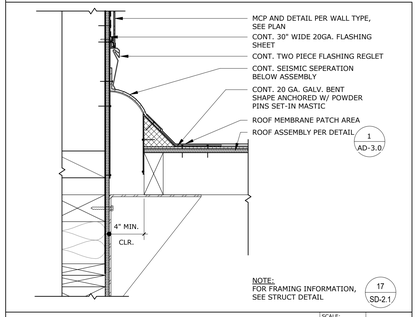

NOTE:
FOR FRAMING INFORMATION, SEE STRUCT DETAIL 17 / SD-2.1

SEISMIC JOINT SCALE: 1 1/2" = 1'-0" REF.: 8/A1-6.0 4

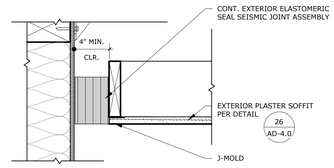

NOTE:
FOR FRAMING INFORMATION, SEE STRUCT DETAIL 17 / SD-2.1

SEISMIC JOINT SCALE: 1 1/2" = 1'-0" REF.: 8/A1-6.0 3

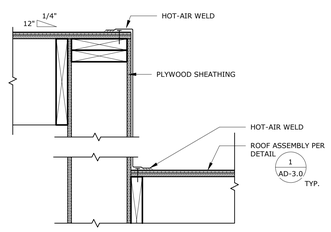

NOTE: FOR STRUCTURAL FRAMING, SEE - / S1-3.1

EXT. ROOF TRANSITION SCALE: 1 1/2" = 1'-0" REF.: 1/A1-3.0 7

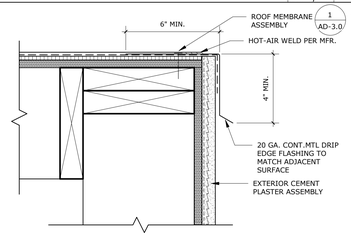

NOTE: FOR STRUCTURAL FRAMING, SEE 1 / S0-1.5

EXT. WALL TYP. A3 @ CPL 2 SCALE: 3" = 1'-0" REF.: 1/AD-3.1 2

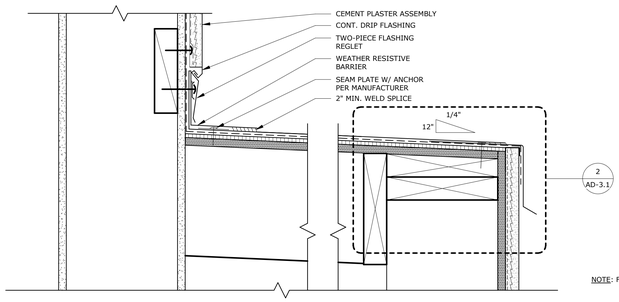

NOTE: FOR STRUCTURAL FRAMING, SEE 1 / S0-1.5

EXT. WALL TYP. A3 @ CPL SCALE: 3" = 1'-0" REF.: 5/A1-6.0 1

STAMPS

LICENSED ARCHITECT
CHRISTOPHER CLARKE
No. C-31940
Exp. 12/31/22
STATE OF CALIFORNIA

IDENTIFICATION STAMP
DIV. OF THE STATE ARCHITECT
APP: 04-120895 INC:
REVIEWED FOR
SS ☑ FLS ☑ ACS ☑
DATE: 06/27/2022

AD
File No.

CONSULTANT BRANDING

RUHNAU
CLARKE
ARCHITECTS

GHS KITCHEN & WEIGHTROOM: 06/13/2022 DSA SUBMITTAL

PROJECT No. :1-30-55
6/21/2022 3:16:22 PM

DRAWN BY: CHECKED BY:

ISSUE No.____ DATE____ DESCRIPTION____
ISSUE No.____ DATE____ DESCRIPTION____
ISSUE No.____ DATE____ DESCRIPTION____
ISSUE No.____ DATE____ DESCRIPTION____

REVISION No.____ DATE____ DESCRIPTION____
REVISION No.____ DATE____ DESCRIPTION____
REVISION No.____ DATE____ DESCRIPTION____
REVISION No.____ DATE____ DESCRIPTION____

RUHNAUCLARKE.COM
3775 TENTH STREET, RIVERSIDE CALIFORNIA 92501 (951) 684-4664 / 5751 PALMER WAY, SUITE C, CARLSBAD CALIFORNIA 92010 (760) 438 5899

GHS KITCHEN & WEIGHTROOM
GROSSMONT HIGH SCHOOL
1100 MURRAY DR, EL CAJON, CA 92020
GROSSMONT UNION HIGH SCHOOL

ROOF DETAILS

AD-3.1

1-30-55

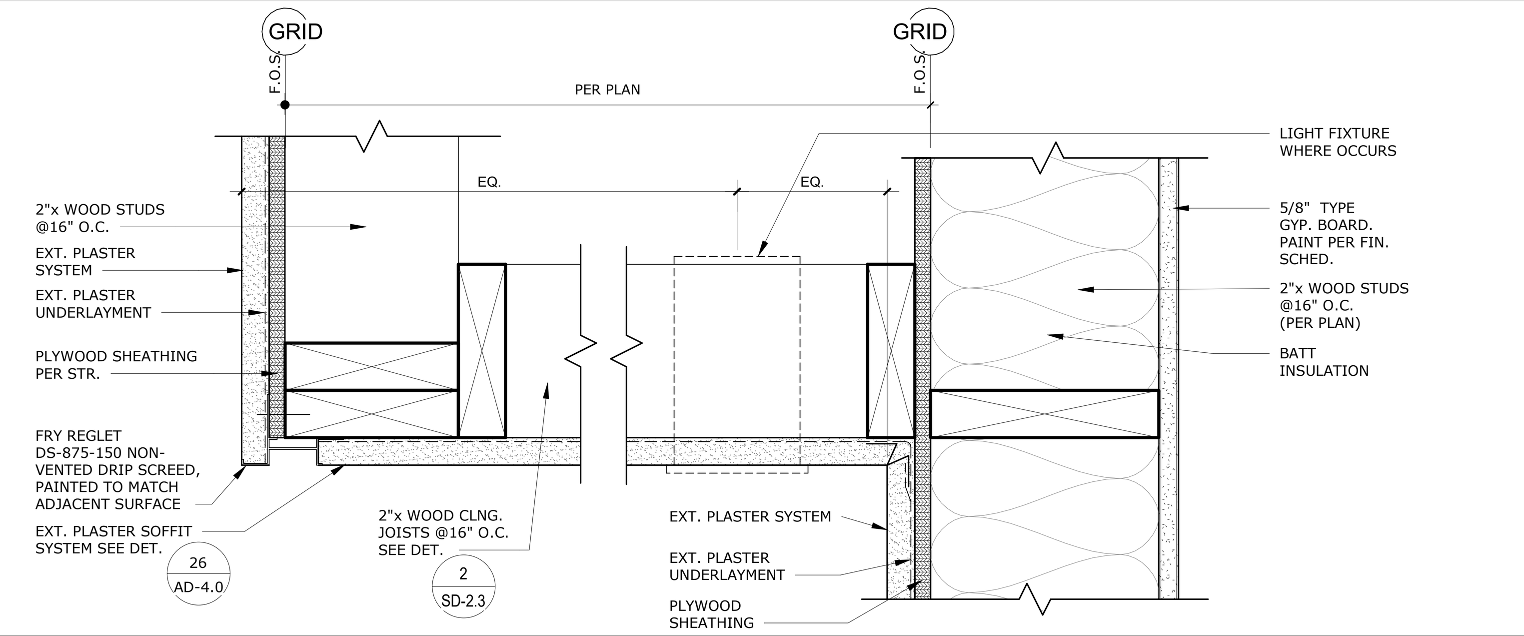

EXT. PLASTER SOFFIT @ PLASTER | SCALE: 3" = 1'-0" | REF.: 3/A1-6.0 | 25

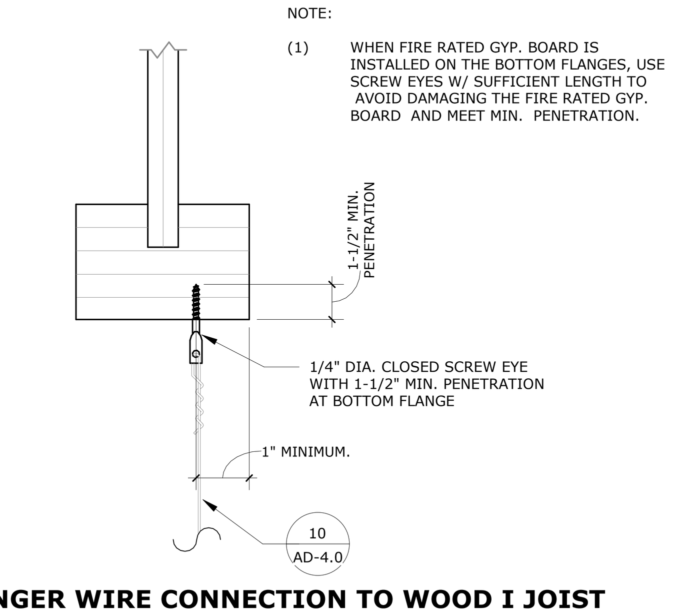

HANGER WIRE ATTACHMENT | SCALE: 1 1/2" = 1'-0" | REF.: / | 20

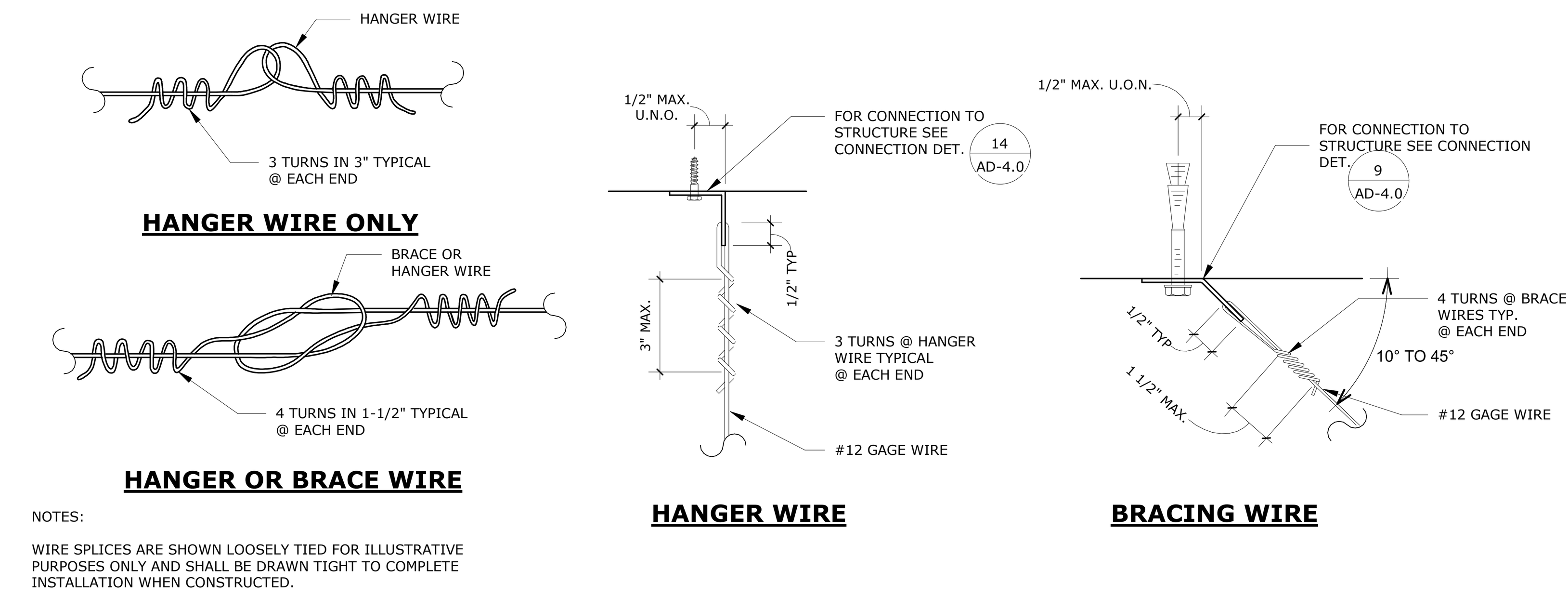

HANGER & BRACING WIRE CONNECTION - TYP. WIRE TURNS | SCALE: 3" = 1'-0" | REF.: / | 10

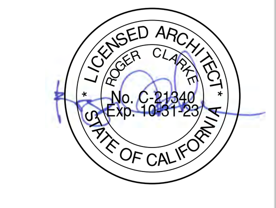

IDENTIFICATION STAMP
DIV. OF THE STATE ARCHITECT
APP: 04-120895 INC:
REVIEWED FOR
SS ☑ FLS ☑ ACS ☑
DATE: 06/27/2022

STAMPS

RUHNAU
CLARKE
ARCHITECTS

CONSULTANT BRANDING

GRID CEILING NOTES

CEILING SYSTEM GENERAL NOTES FOR LAY-IN PANEL CEILINGS: CBC 2019 (IR 25-2)

1. CEILING SYSTEM GENERAL NOTES:

1.01 Ceiling system components shall comply with ASTM C635 and Section 5.1 of ASTM E580.
1.02 The ceiling grid system must be rated heavy duty as defined by ASTM C635-13a.
1.03 Ceiling systems. The following ceiling system(s) is/are part of the scope of this project:
Manufacturer's Name: ARMSTRONG or equal.
Product Evaluation Report Type and Number: ICC ESR - 1308
Manufacturer's Model Number - main runner: XL 7301
Manufacturer's catalog number - cross runner: XL7328, XL7340
1.04 Seismic Wall Clip:
Manufacturer's Model: BERC2 Clip.
1.05 Ceiling panels shall not support any light fixtures, air terminals or devices.
1.06 For ceiling installations utilizing acoustical tile panels of mineral or glass fiber, it is not mandatory to provide ¾" clearance between the acoustical tile panels and the wall on the sides of the ceiling which are free to slip. For all other ceiling panel types, provide ¾" clearance between the ceiling panel and the wall on the sides of the ceiling free to slip. Clearance between ceiling grid runners/members and walls shall comply with the details on these drawings regardless of the ceiling tile material.

2. MATERIALS:

2.01 Ceiling wire shall be Class 1 zinc coated (galvanized) carbon steel conforming to ASTM A641. Wire shall be #12 gage (0.106" diameter) with soft temper and minimum tensile strength = 70 ksi.
2.02 Galvanized sheet steel (including that used for metal stud and track compression struts/post) shall conform to ASTM A653, or other equivalent sheet steel listed in Section A3.1 of the North American Specification for the Design of Cold-Formed Steel Structural Members, (AISI S100). Material 43 mil (18 gage) and lighter shall have minimum yield strength of 33 ksi. Material 54 mil (16 gage) and heavier shall have a minimum yield strength of 50 ksi.
2.03 Electrical metallic tube (EMT) shall be ANSI C80.3/UL 797 carbon steel with G90 galvanizing. EMT shall have minimum yield strength (Fy) of 30 ksi and minimum ultimate strength (Fu) of 48 ksi.

3. ATTACHMENT OF HANGER AND BRACING WIRES:

3.01 Separate all ceiling hanger and bracing wires at least six (6) inches from all unbraced ducts, pipes, conduit, etc.
3.02 Hanger and bracing wires shall not attach to or bend around obstructions including but not limited to: piping, ductwork, conduit and equipment.
3.03 Hanger wires that are more than one (horizontal) in six (vertical) out of plumb shall have counter-sloping wires.
3.04 Slack safety wires shall be considered hanger wires for installation and testing requirements.
3.05 Hanger and bracing wire anchorage to the structure shall be installed in such a manner that the direction of the anchorage aligns closely with the direction of the wire. (e.g. bracing wire ceiling clips must be bent as shown in the details and rotated as required to align closely with the direction of the wire, screw eyes in wood must be installed so they align closely with the direction of the wire, etc.)

4. FASTENERS AND WELDING:

4.01 Sheet metal screws shall comply with ASTM C1513, ASME B18.6.3. Penetration of screws through joined material shall not be less than three exposed threads.
4.02 Expansion anchors shall be:PROVIDE THE MANUFACTURER, PRODUCT, EVALUATION REPORT NUMBER AND LOAD FOR EACH SIZE OF EXPANSION ANCHORS PER CBC 1913A.7.2
4.03 Power-Actuated Fasteners shall be:PROVIDE THE MANUFACTURER, PRODUCT, EVALUATION REPORT NUMBER OF POWER-ACTUATED FASTENERS.
4.04 If not otherwise specified in the evaluation report, power-actuated fasteners installed in steel shall be installed so the entire pointed end of the fastener is driven through the steel member.
4.05 Power-actuated fasteners in concrete are not permitted for bracing wires.
4.06 Concrete reinforcement and prestressing tendons shall be located by non-destructive means prior to installing post - installed anchor.
4.07 Welding shall be in accordance with AWS D1.3 using E60XX series electrodes.

5. TESTING:

5.01 All field testing must be performed in the presence of the project inspector.
5.02 Post-installed anchors in concrete used to support hanger wires shall be tested at a frequency of 10 percent. Power actuated fasteners in concrete shall be field tested for 200 lbs. in tension. All other post-installed anchors in concrete shall be tested in accordance with CBC Section 1910A.5.
5.03 Post-installed anchors in concrete used to attach bracing wires shall be tested at a frequency of 50 percent in accordance with CBC Section 1910A.5.

6. LIGHT FIXTURES:

6.01 All luminaires shall be positively attached to the ceiling suspension systems by mechanical means to resist a horizontal force equal to the weight of the luminaire. A minimum of two screws or approved fasteners are required at each luminaire, per ASTM E580, Section 5.3.1.
6.02 Surface-mounted luminaires shall be attached to the main runner with at least two positive clamping devices. The clamping device shall completely surround the supporting ceiling runner and be made of steel with a minimum thickness of #14 gage. Rotational spring catches do not comply. A #12 gage slack safety wire shall be connected from each clamping device to the structure above. Provide additional supports when light fixtures are eight (8) feet or longer or exceed 56 lb. Maximum spacing between supports shall not exceed eight (8) feet.
6.03 Luminaires weighing less than or equal to 10 lb. may be supported directly on the ceiling runners, shall have a minimum of one (1) #12 gage slack safety wire connected from the fixture housing to the structure above.
6.04 Luminaires weighing greater than 10 lb. but less than or equal to 56 lbs. may be supported directly on the ceiling runners, but they shall have a minimum of two (2) #12 gage slack safety wires connected from the fixture housing at diagonal corners to the structure above.
Exception: All light fixtures greater than two by four feet weighing less than 56 lbs. shall have a #12 gage slack safety wire at each corner.
6.05 All Light fixtures weighing greater than 56 lb. shall be independently supported by not less than four (4) taut #12 gage hanger wires (one at each corner) attached from the fixture housing to the structure above or other approved hangers. The four (4) taut #12 gage wires or other approved hangers, including their attachment to the structure above, shall be capable of supporting four (4) times the weight of the fixture.

7. SERVICES WITHIN THE CEILING:

7.01 All flexible sprinkler hose fitting mounting brackets, ceiling-mounted air terminals or other services shall be positively attached to the ceiling suspension systems by mechanical means. Screws or approved fasteners are required. A minimum of two attachments are required at each component.
7.02 Ceiling-mounted air terminals or other services weighing less than or equal to 20 lb. shall have one (1) #12 gage slack safety wire attached from the terminal or service to the structure above.
7.03 Flexible sprinkler hose fittings, ceiling-mounted air terminals or other services weighing more than 20 lb. but less than or equal to 56 lb. shall have two (2) #12 gage slack safety wires (at diagonal corners) connected from the terminal or service to the structure above.
7.04 Flexible sprinkler hose fittings, ceiling-mounted air terminals or other services weighing more than 56 lb. shall be supported directly from the structure above by not less than four (4) taut #12 gage hanger wires attached from the terminal or service to the structure above or other approved hangers.

8. OTHER DEVICES WITHIN THE CEILING:

8.01 All lightweight miscellaneous devices, such as strobe lights, occupancy sensors, speakers, exit signs, etc., shall be attached to the ceiling grid. In addition, devices weighing more than 10 lbs. shall have a #12 gage slack safety wire anchored to the structure above. Devices weighing more than 20 lb. shall be supported independently from the structure above.

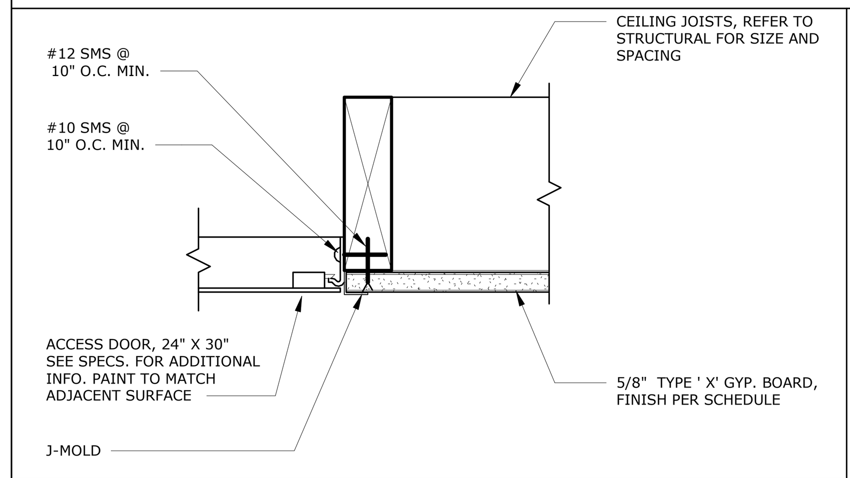

CEILING ACCESS | SCALE: 3" = 1'-0" | REF.: / | 29

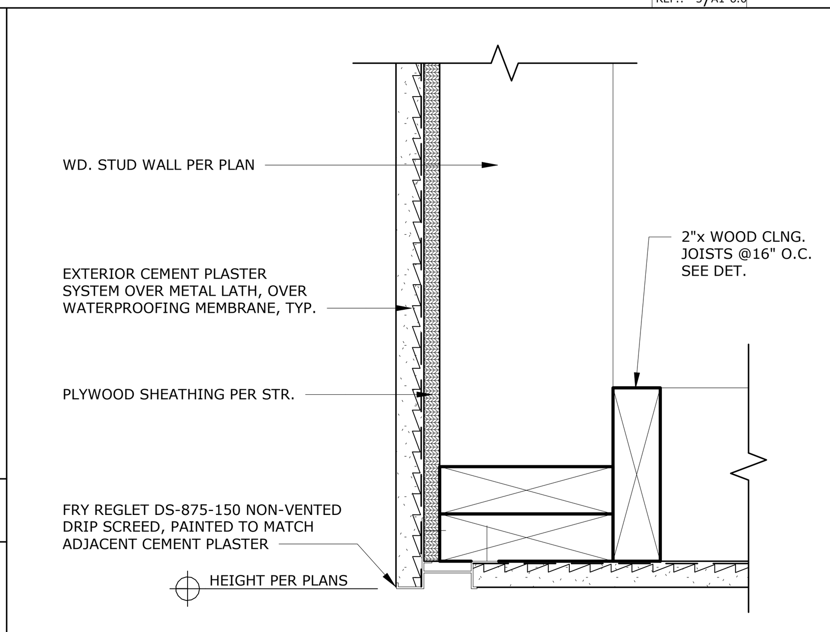

PLASTER SOFFIT AT CORNER | SCALE: 3" = 1'-0" | REF.: 2/A2-1.0 | 24

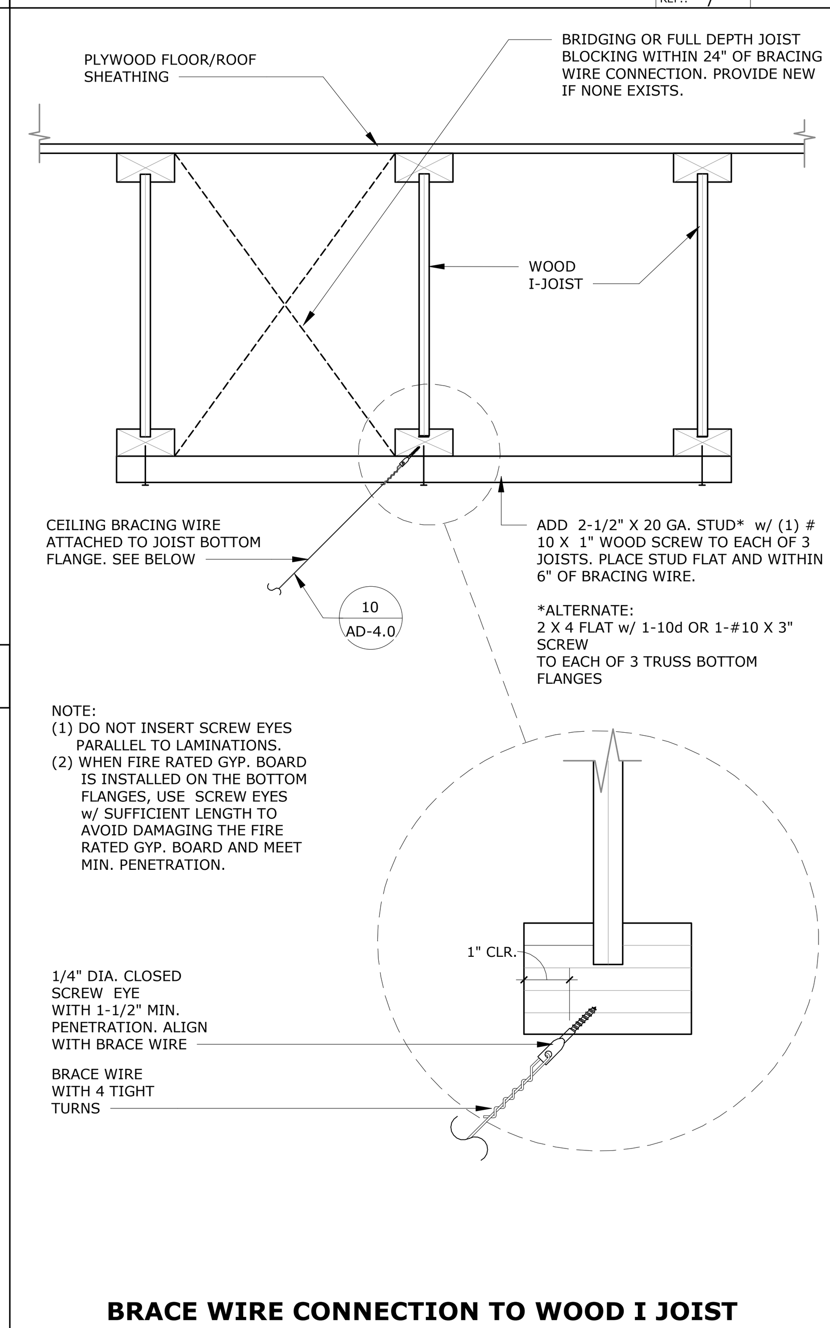

BRACING WIRE ATTACHMENT | SCALE: 1/2" = 1'-0" | REF.: / | 18

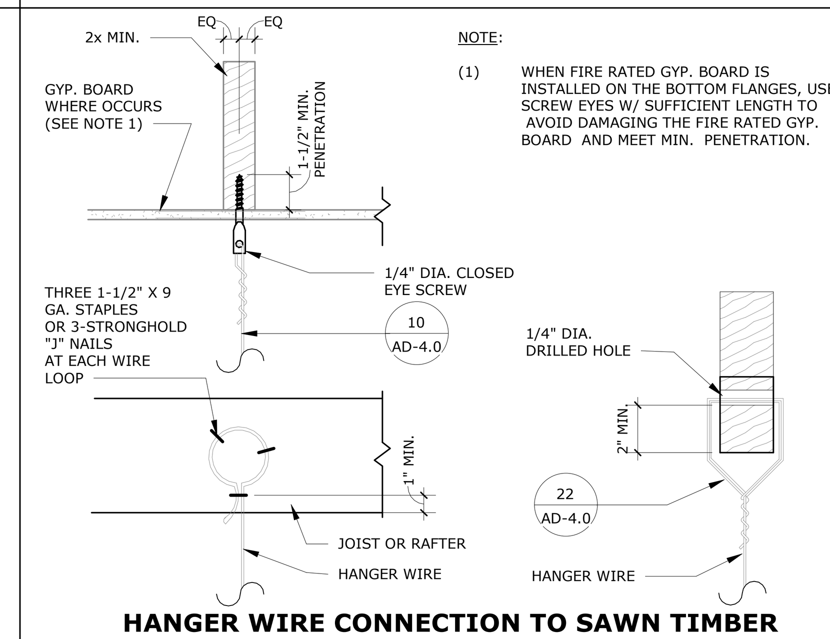

HANGER WIRE ATTACHMENT | SCALE: 1 1/2" = 1'-0" | REF.: / | 14

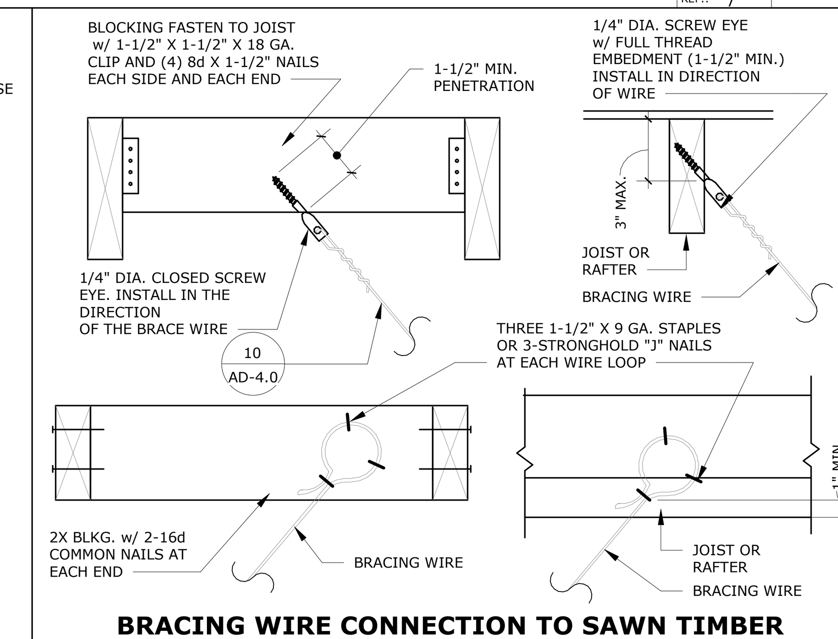

BRACING WIRE ATTACHMENT | SCALE: 1 1/2" = 1'-0" | REF.: / | 9

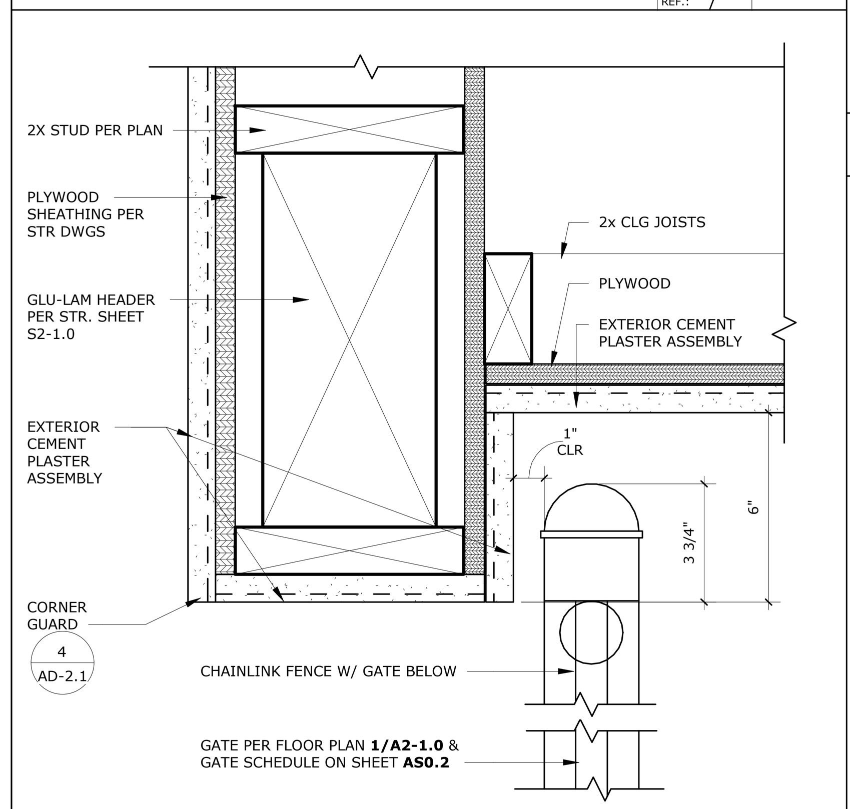

SOFFIT CEILING OVER GATE | SCALE: 3" = 1'-0" | REF.: 4/A2-6.0 | 28

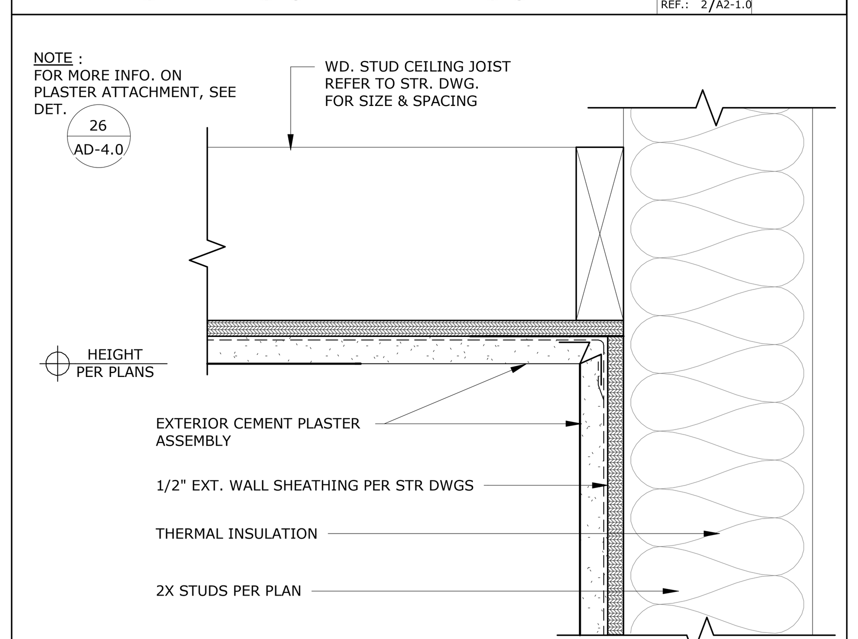

PLASTER DETAIL | SCALE: 3" = 1'-0" | REF.: 2/A2-1.0 | 23

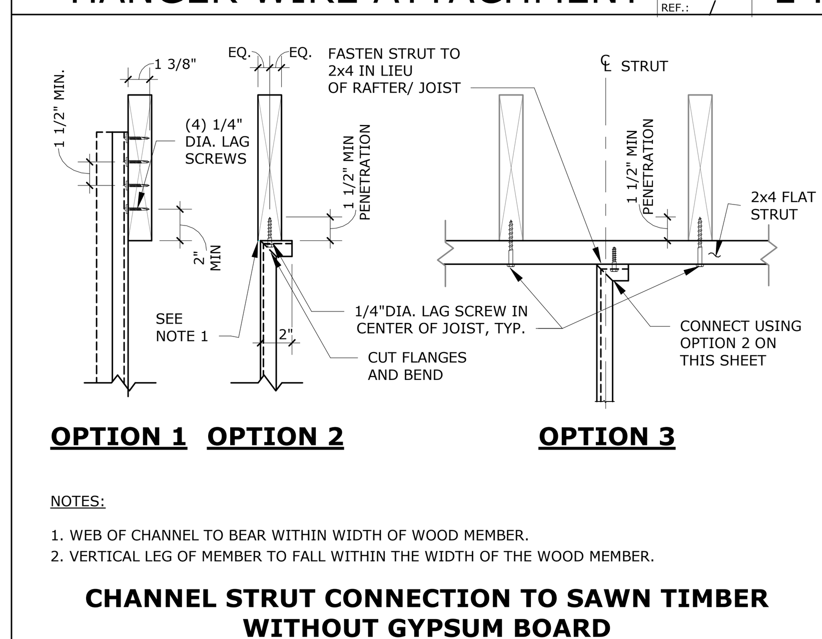

CHANNEL STRUT ATTACHMENT | SCALE: 1 1/2" = 1'-0" | REF.: / | 13

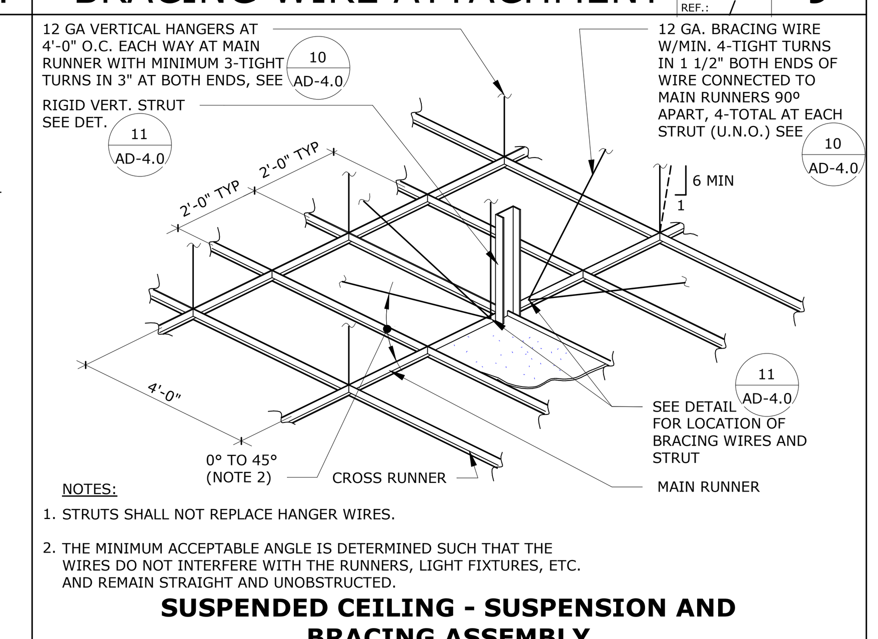

CEILING BRACING | SCALE: 3" = 1'-0" | REF.: / | 8

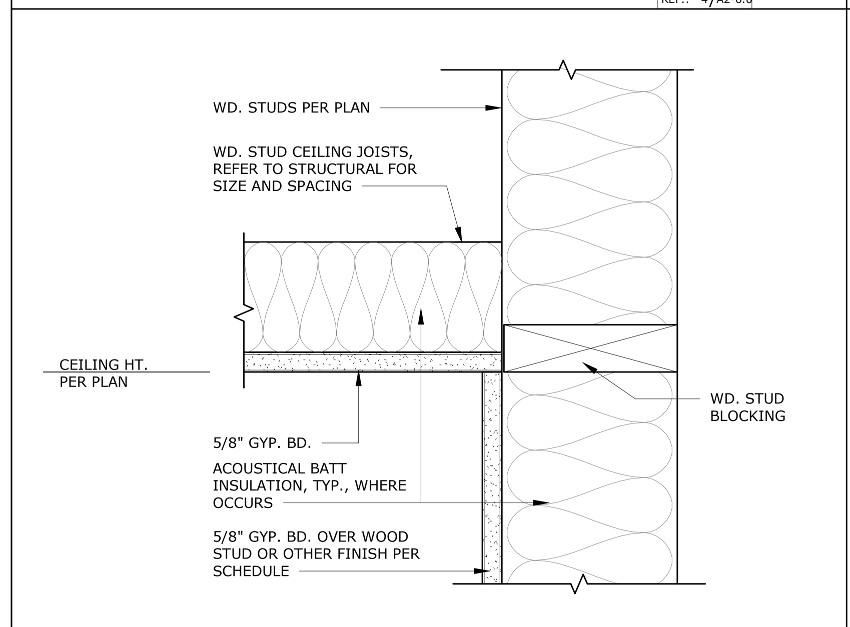

FRAMED GYP. BOARD CEILING | SCALE: 3" = 1'-0" | REF.: / | 27

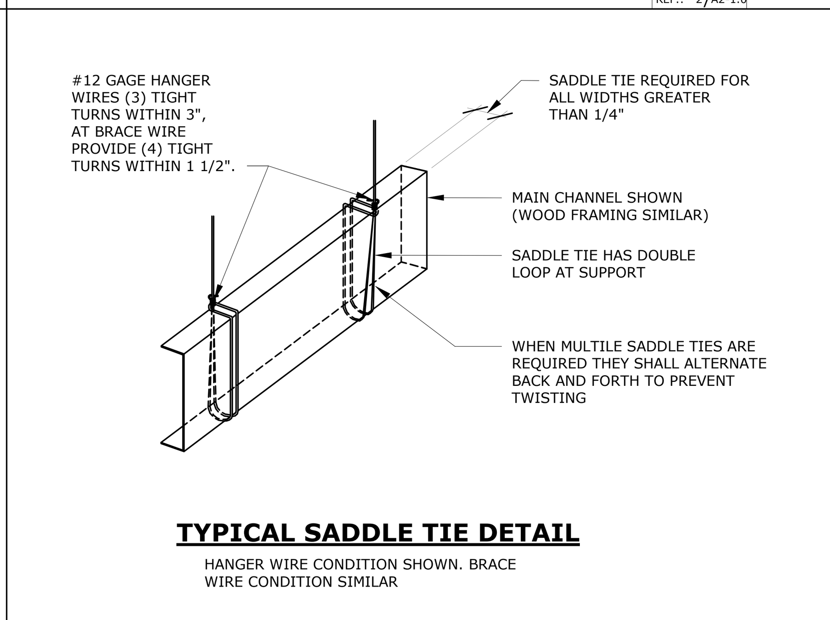

TYPICAL SADDLE TIE DETAIL | SCALE: 3" = 1'-0" | REF.: / | 22

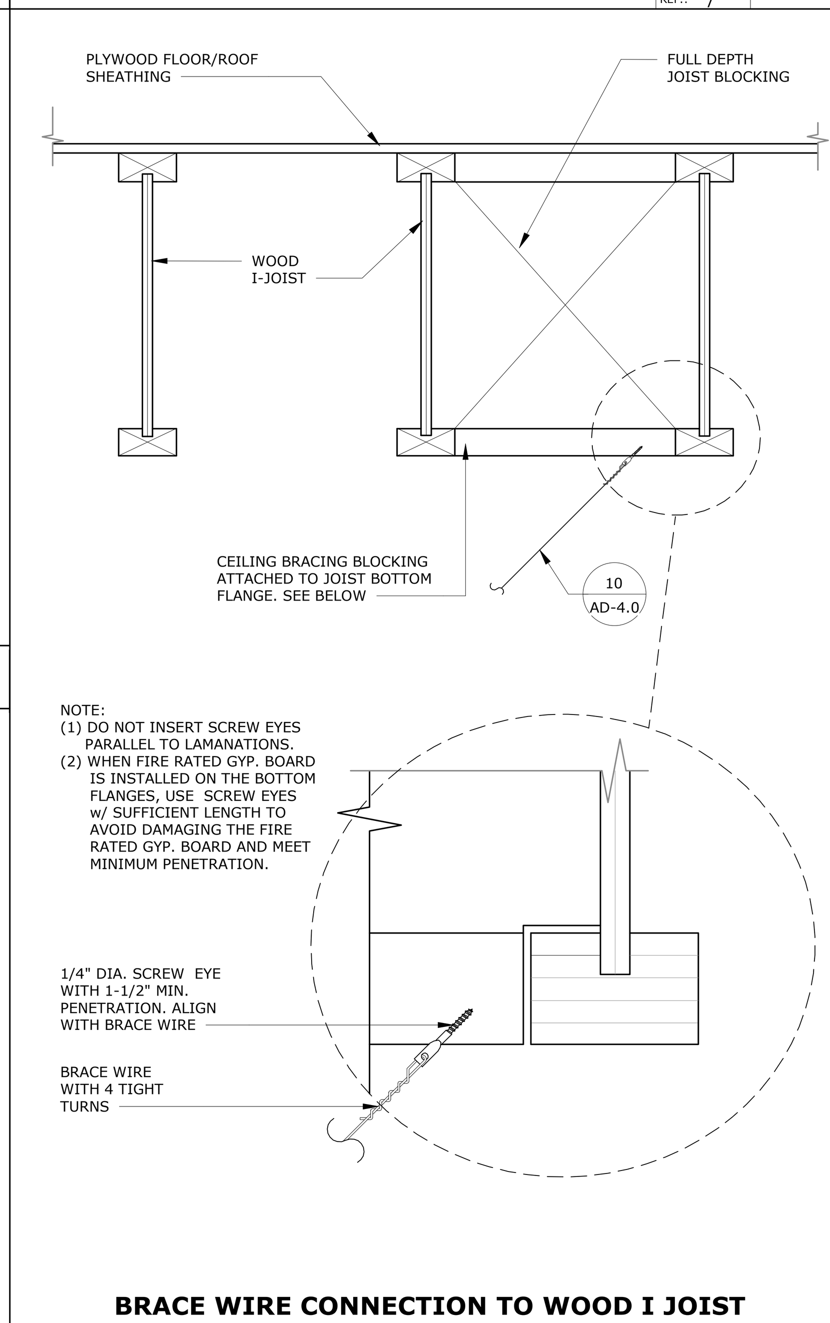

BRACING WIRE ATTACHMENT | SCALE: 1/2" = 1'-0" | REF.: / | 16

CHANNEL COMPRESSION STRUT	MAXIMUM LENGTH
250S125-33	5' - 0"
250S137-33	6' - 10"
362S137-33	8' - 0"
250S137-43	8' - 10"
400S137-43	10' - 10"

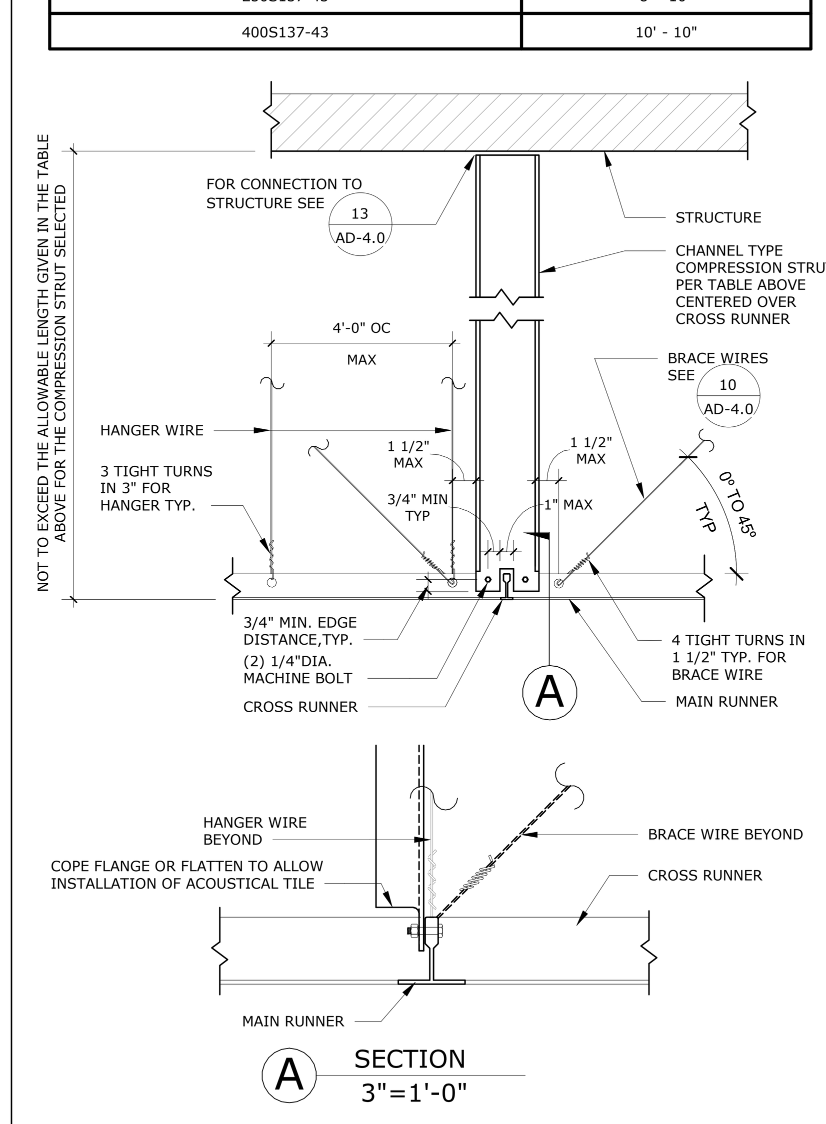

CHANNEL TYPE STRUT | SCALE: 1 1/2" = 1'-0" | REF.: / | 11

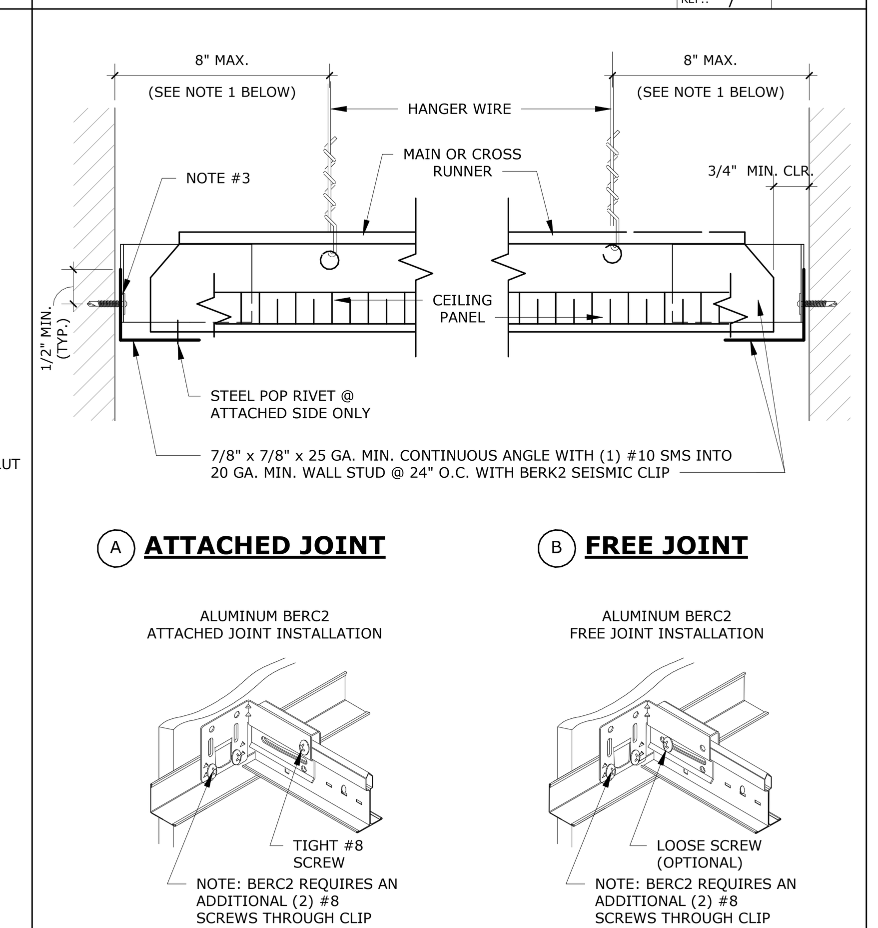

NOTES:

1. PROVIDE #12 GAGE HANGER WIRES AT THE ENDS OF ALL MAIN AND CROSS RUNNERS WITHIN EIGHT (8) INCHES OF THE SUPPORT OR WITHIN ONE-FOURTH (1/4) OF THE LENGTH OF THE END TEE, WHICHEVER IS LESS, FOR THE PERIMETER OF THE CEILING AREA. PERIMETER WIRES ARE NOT REQUIRED WHEN THE LENGTH OF THE END TEE IS EIGHT (8) INCHES OR LESS.
2. NAILS AT ENDS OF HORIZONTAL STABILIZERS ARE TO BE PLACED WITH NAIL HEAD TOWARD CENTER LINE OF SPAN OF STRUT.
3. (1) #10 SMS TO 20 GA. MIN. WALL STUD @ 24" O.C.

CEILING PERIMETER | SCALE: 3" = 1'-0" | REF.: 3/A1-6.0 | 6

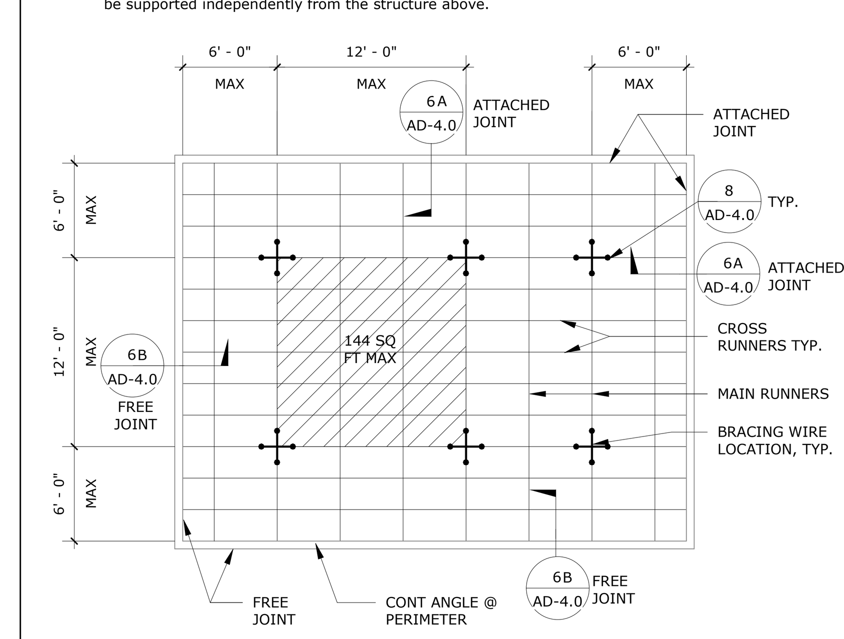

NOTE:

BRACING WIRES AND COMP. STRUT SHALL OCCUR AT EVERY 144 SQ. FT. MAX. IN ROOMS OVER 144 SQ. FT.

TYP. CEILING PLAN FOR 12'-0"x12'-0" BRACE ASSEMBLY SPACING

SUSPENDED CEILING GRID | SCALE: 1/8" = 1'-0" | REF.: / | 1

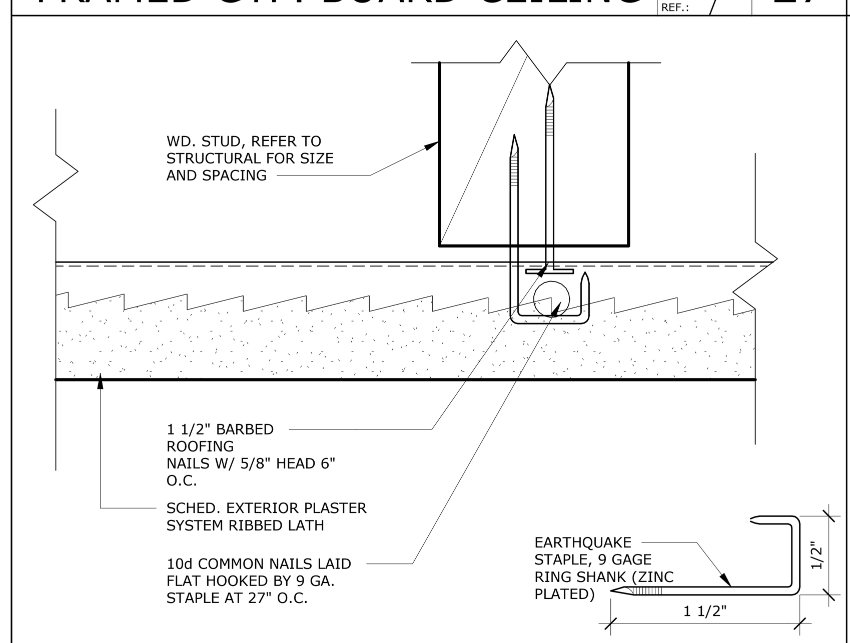

EXT. PLSTR SOFFIT | SCALE: 12" = 1'-0" | REF.: / | 26

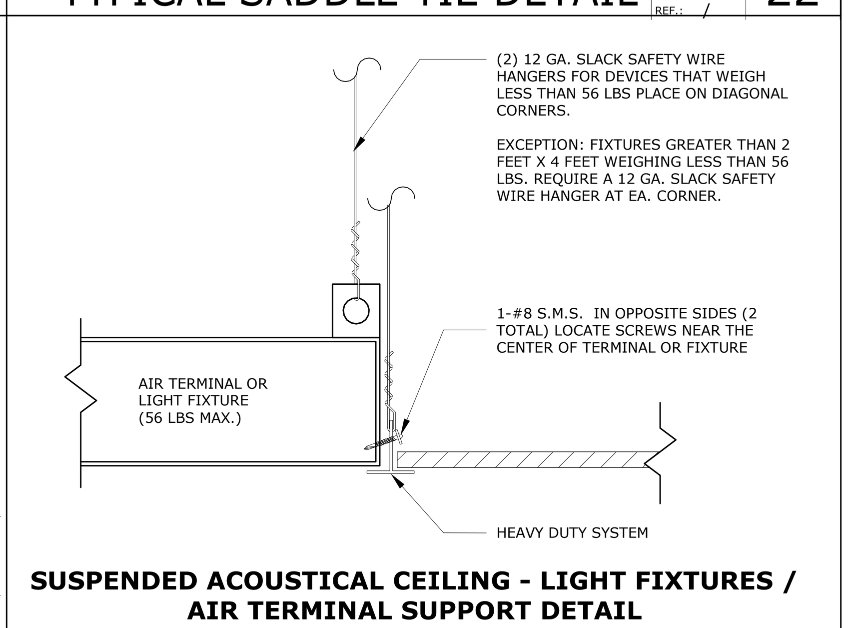

FIXTURE SUPPORT SECTION | SCALE: 3" = 1'-0" | REF.: / | 21

PROJECT No. :1-30-55
6/21/2022 3:16:26 PM

DRAWN BY: CHECKED BY:
ISSUE No.___ DATE___ DESCRIPTION___ (×4)
REVISION No.___ DATE___ DESCRIPTION___ (×4)

RUHNAUCLARKE.COM
3775 TENTH STREET, RIVERSIDE CALIFORNIA 92501 (951) 684 4664 / 5751 PALMER WAY, SUITE C, CARLSBAD CALIFORNIA 92010 (760) 438 5899

GHS KITCHEN & WEIGHTROOM
GROSSMONT HIGH SCHOOL
1100 MURRAY DR, EL CAJON, CA 92020
GROSSMONT UNION HIGH SCHOOL

DETAILS
CEILING DETAILS

AD-4.0

GHS KITCHEN & WEIGHTROOM: 06/13/2022 DSA SUBMITTAL

STAMPS

LICENSED ARCHITECT
ROGER CLARKE
No. C-21840
Exp. 10/31/23
STATE OF CALIFORNIA

IDENTIFICATION STAMP
DIV. OF THE STATE ARCHITECT
APP: 04-120895 INC:
REVIEWED FOR
SS ☑ FLS ☑ ACS ☑
DATE: 06/27/2022

CONSULTANT BRANDING

RUHNAU
CLARKE
ARCHITECTS

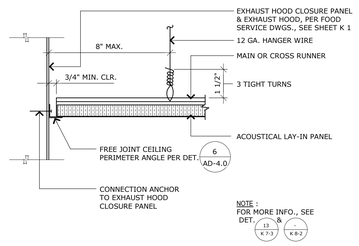

EXHAUST HOOD SCALE: 3" = 1'-0" REF.: 3/A2-5.0 8

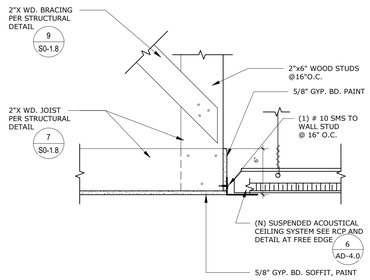

CEILING SOFFIT SCALE: 1 1/2" = 1'-0" REF.: / 7

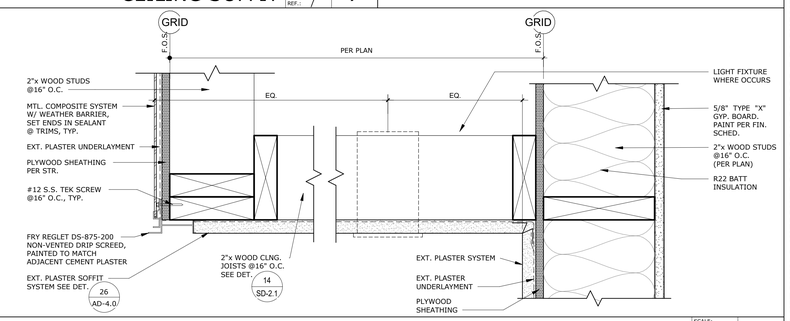

EXT. PLASTER SOFFIT @ MCP SCALE: 3" = 1'-0" REF.: 1/A1-6.0 1

GHS KITCHEN & WEIGHTROOM: 06/13/2022 DSA SUBMITTAL

PROJECT No. :1-30-55
6/21/2022 3:16:26 PM

DRAWN BY: CHECKED BY:

ISSUE No.	DATE	DESCRIPTION	REVISION No.	DATE	DESCRIPTION
ISSUE No.	DATE	DESCRIPTION	REVISION No.	DATE	DESCRIPTION
ISSUE No.	DATE	DESCRIPTION	REVISION No.	DATE	DESCRIPTION
ISSUE No.	DATE	DESCRIPTION	REVISION No.	DATE	DESCRIPTION

RUHNAUCLARKE.COM

3775 TENTH STREET, RIVERSIDE CALIFORNIA 92501 (951) 684 4664 / 5751 PALMER WAY, SUITE C, CARLSBAD CALIFORNIA 92010 (760) 438 5899

GHS KITCHEN & WEIGHTROOM
GROSSMONT HIGH SCHOOL
1100 MURRAY DR, EL CAJON, CA 92020
GROSSMONT UNION HIGH SCHOOL

CEILING DETAILS

AD-4.1

1-30-55

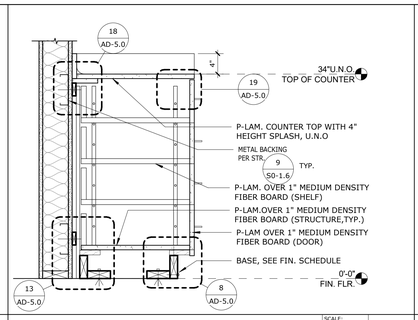

BASE CABINET W/ DRAWERS — SCALE: 1" = 1'-0" — REF.: / — 15

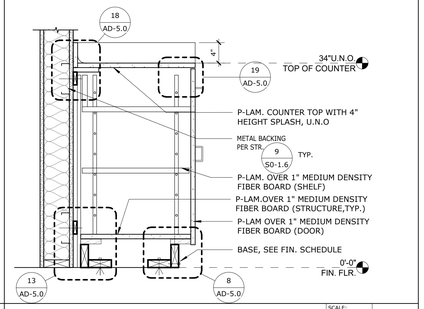

BASE CAB W/ DOOR/DRAWERS — SCALE: 1" = 1'-0" — REF.: / — 10

STAMPS

LICENSED ARCHITECT — No. C-31040 — Exp. 12/31/2023 — STATE OF CALIFORNIA

IDENTIFICATION STAMP
DIV. OF THE STATE ARCHITECT
APP: 04-120895 INC:
REVIEWED FOR
SS ☑ FLS ☑ ACS ☑
DATE: 06/27/2022

AGENCY
FILE NUMBER

CONSULTANT BRANDING

RUHNAU CLARKE ARCHITECTS

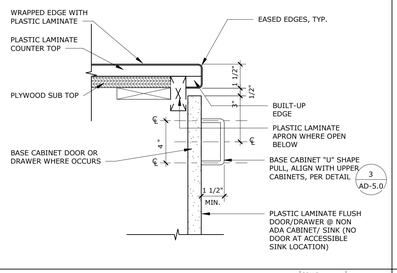

TYP. COUNTER TOP EDGE — SCALE: 3" = 1'-0" — REF.: 10/AD-5.0 — 19

NOTES
1. POWDER COAT FINISH ON BRACKET. NO SHARP EDGES. PROVIDE END CAPS @ ENDS OF TUBE STEEL.
2. THERE SHALL BE NO SHARP OR ABRASIVE ELEMENTS UNDER COUNTER.
3. FOR ACCESSIBLE WORKSPACE TYPICAL CLEARANCES, REFER TO DETAIL: 1 AD-5.0

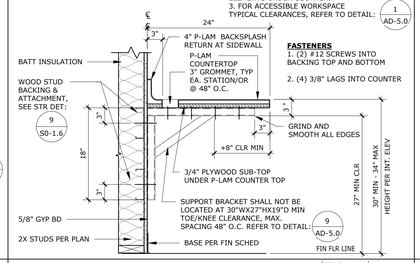

COUNTERTOP BRACKET — SCALE: 1" = 1'-0" — REF.: 3-2/A1-7.1 — 14

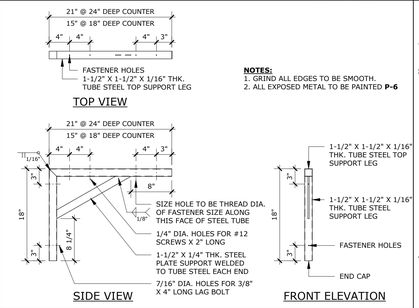

NOTES:
1. GRIND ALL EDGES TO BE SMOOTH.
2. ALL EXPOSED METAL TO BE PAINTED **P-6**

BRACKET — SCALE: 1" = 1'-0" — REF.: / — 9

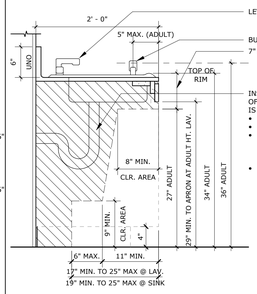

ACCESSIBLE SINK BASE — SCALE: 1" = 1'-0" — REF.: 2-4/A1-7.1 — 4

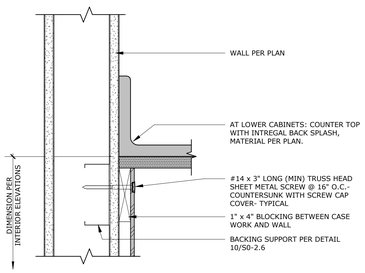

SUPPORT @ STUD WALL — SCALE: 3" = 1'-0" — REF.: 10/AD-5.0 — 18

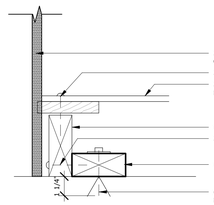

REAR CABINET BASE ANCHOR — SCALE: 3" = 1'-0" — REF.: 10/AD-5.0 — 13

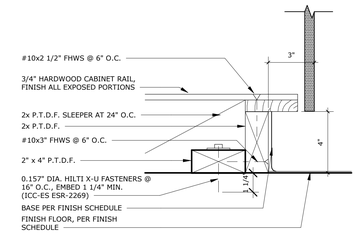

FRONT CABINET BASE ANCHOR — SCALE: 3" = 1'-0" — REF.: 10/AD-5.0 — 8

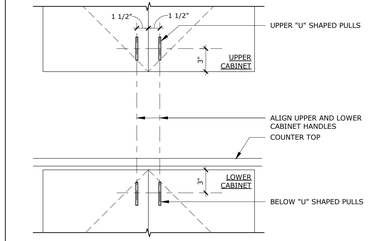

CABINET PULLS — SCALE: 1 1/2" = 1'-0" — REF.: / — 3

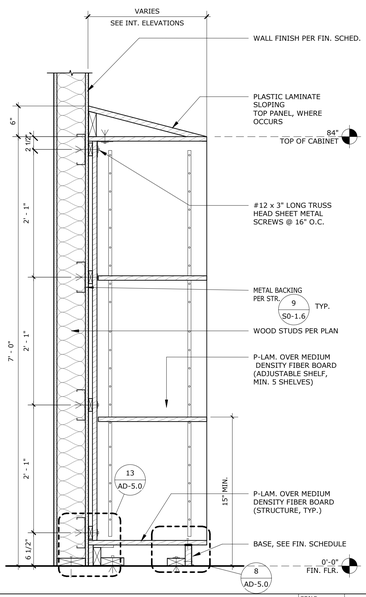

FULL HEIGHT OPEN CABINET — SCALE: 1" = 1'-0" — REF.: / — 21

NOTE:
UPPER AND LOWER CABINET PULLS TO ALIGN PER DETAIL

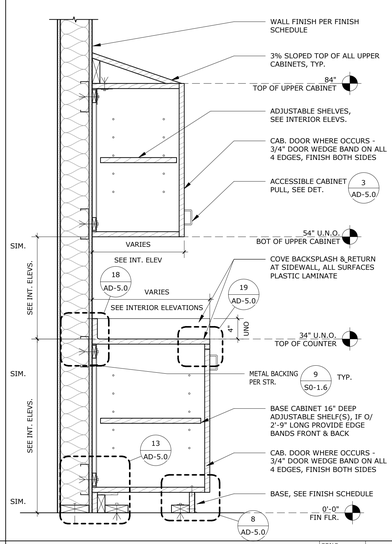

UPPER AND BASE CABINET — SCALE: 1" = 1'-0" — REF.: 3-2/A1-7.1 — 16

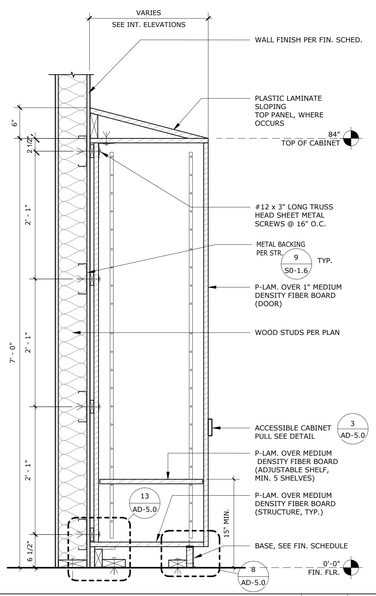

FULL HEIGHT CAB W/ DOORS — SCALE: 1" = 1'-0" — REF.: / — 11

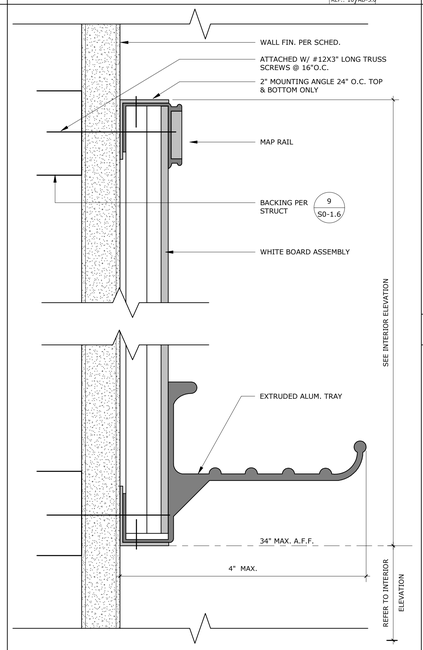

FIXED WHITEBOARD — SCALE: 12" = 1'-0" — REF.: / — 6

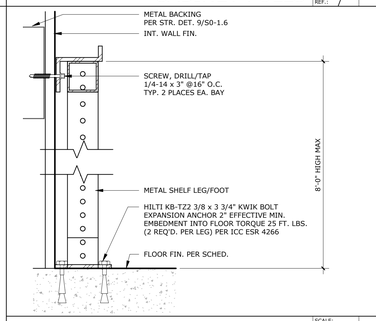

METAL SHELF ATTACHMENT — SCALE: 3" = 1'-0" — REF.: 2-3/A1-7.1 — 2

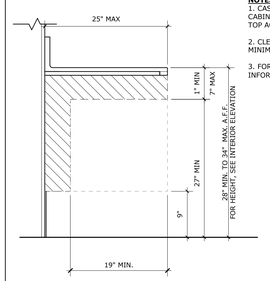

NOTES:
1. CASEWORK SHALL HAVE NO CABINET DOOR AT ALL @ COUNTER TOP ACCESSIBLE WORKSTATION
2. CLEAR FLOOR SPACE MUST BE A MINIMUM OF 30" WIDE
3. FOR MORE INFORMATION, REFER TO DETAIL 14 AD-5.0

ACCESSIBLE WORKSPACE — SCALE: 1" = 1'-0" — REF.: / — 1

GHS KITCHEN & WEIGHTROOM: 06/13/2022 DSA SUBMITTAL

PROJECT No. :1-30-55
6/21/2022 3:16:29 PM

DRAWN BY: CHECKED BY:

ISSUE No.	DATE	DESCRIPTION	REVISION No.	DATE	DESCRIPTION
ISSUE No.	DATE	DESCRIPTION	REVISION No.	DATE	DESCRIPTION
ISSUE No.	DATE	DESCRIPTION	REVISION No.	DATE	DESCRIPTION
ISSUE No.	DATE	DESCRIPTION	REVISION No.	DATE	DESCRIPTION

RUHNAUCLARKE.COM
3775 TENTH STREET, RIVERSIDE CALIFORNIA 92501 (951) 684 4664 / 5751 PALMER WAY, SUITE C, CARLSBAD CALIFORNIA 92010 (760) 438 5899

GHS KITCHEN & WEIGHTROOM
GROSSMONT HIGH SCHOOL
1100 MURRAY DR, EL CAJON, CA 92020
GROSSMONT UNION HIGH SCHOOL

DETAILS
CASEWORK DETAILS

AD-5.0

1-30-55

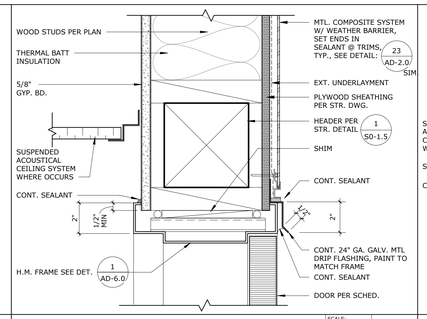

EXT HM DOOR HEAD @ MCP — SCALE: 3" = 1'-0" — REF.: 2/A1-4.0 — 25

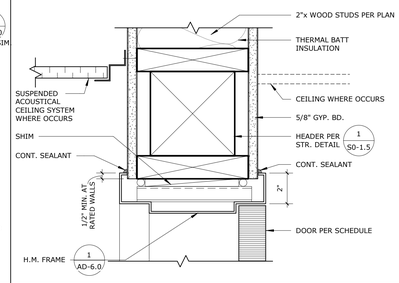

INT HM DOOR HEAD @ GYP — SCALE: 3" = 1'-0" — REF.: / — 20

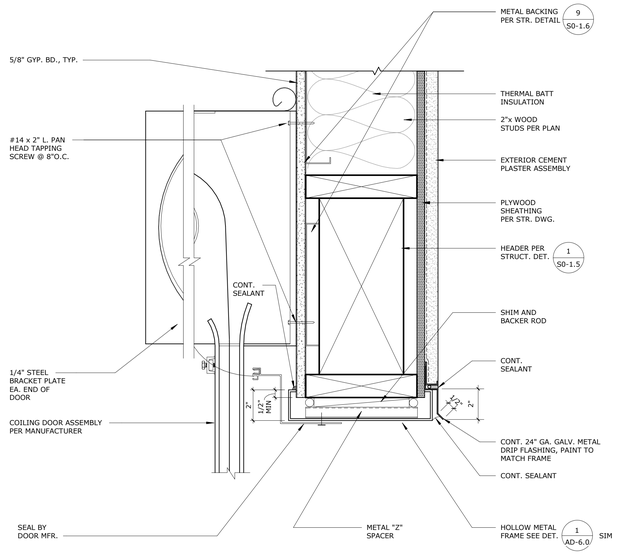

COILING DOOR HEAD — SCALE: 3" = 1'-0" — REF.: / — 9

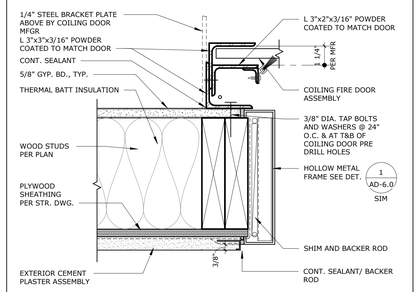

COILING DOOR JAMB — SCALE: 3" = 1'-0" — REF.: / — 4

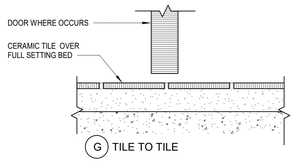

G TILE TO TILE

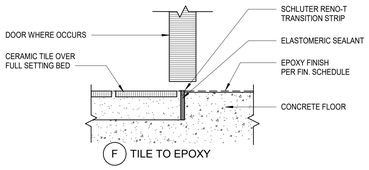

F TILE TO EPOXY

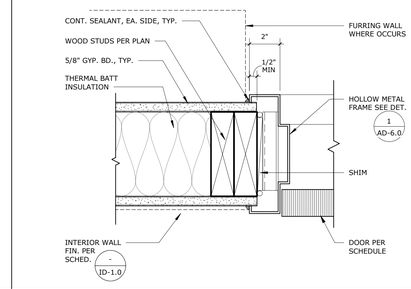

INT HM DOOR JAMB @ GYP — SCALE: 3" = 1'-0" — REF.: / — 19

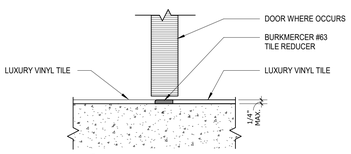

D LVT TO LVT

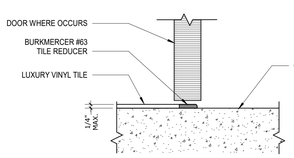

C LVT TO CONC

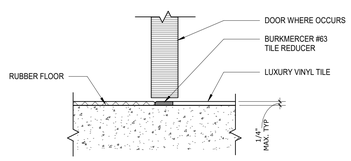

B RUBBER FLOOR TO LVT

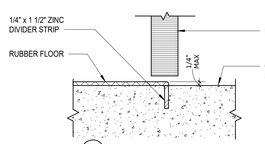

A RUBBER FLOOR TO CONCRETE

TYP INT FLOOR TRANSITIONS — SCALE: 3" = 1'-0" — REF.: / — 26

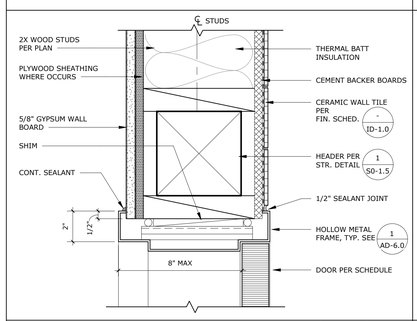

INT HM DOOR HEAD @ TILE — SCALE: 3" = 1'-0" — REF.: / — 22

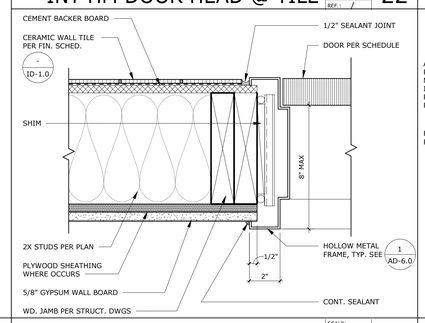

INT HM DOOR JAMB @ TILE — SCALE: 3" = 1'-0" — REF.: / — 21

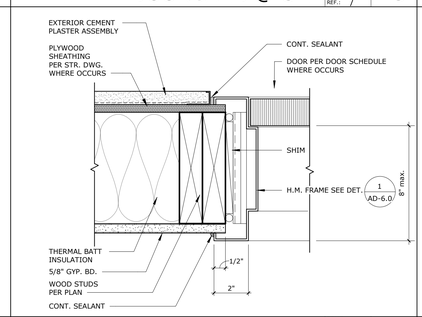

EXT HM DOOR JAMB @ GYP — SCALE: 3" = 1'-0" — REF.: / — 18

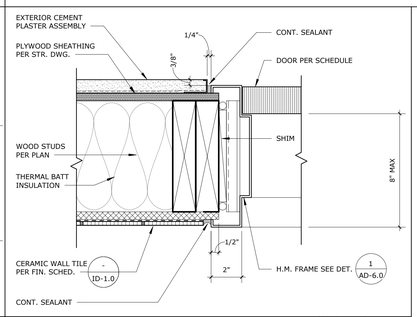

EXT HM DOOR JAMB @ TILE — SCALE: 3" = 1'-0" — REF.: / — 13

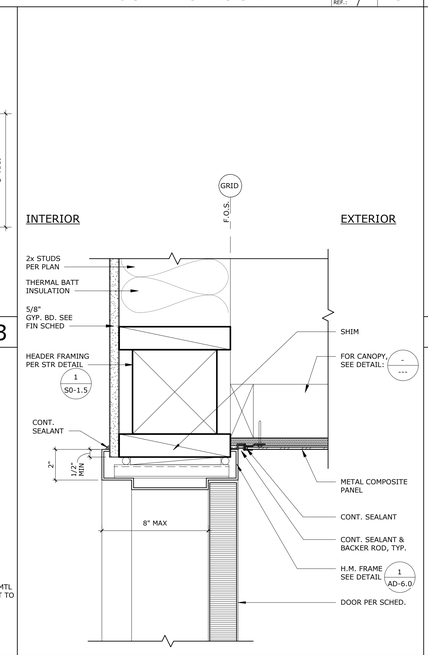

EXT HM DOOR HEAD @CANOPY — SCALE: 3" = 1'-0" — REF.: 23/AD-3.0 — 7

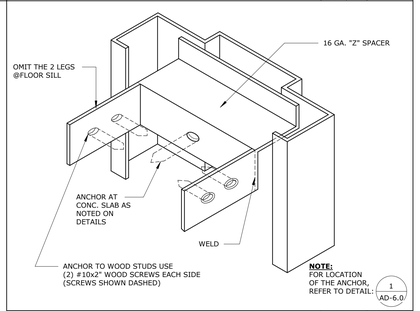

TYP HM FRAME ANCHOR — SCALE: 12" = 1'-0" — REF.: / — 3

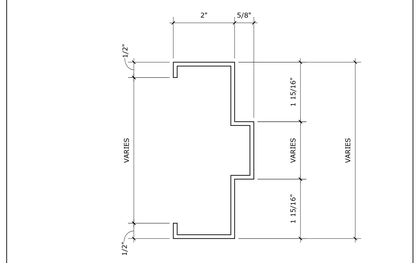

TYP HOLLOW METAL FRAME — SCALE: 6" = 1'-0" — REF.: / — 2

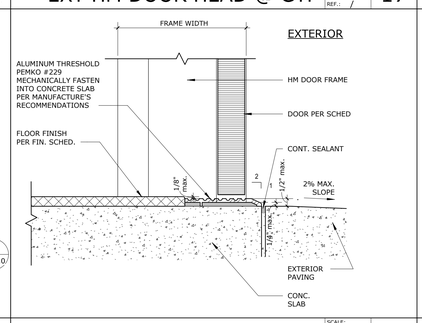

EXT THRESHOLD@RUBBER FLR — SCALE: 3" = 1'-0" — REF.: / — 16

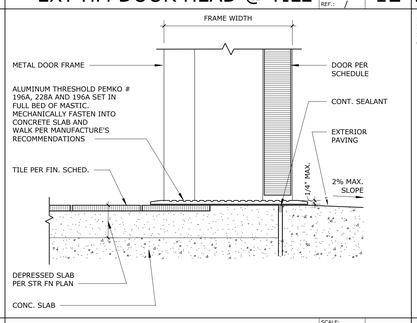

EXT THRESHOLD @ TILE — SCALE: 3" = 1'-0" — REF.: 3/A2-6.0 — 11

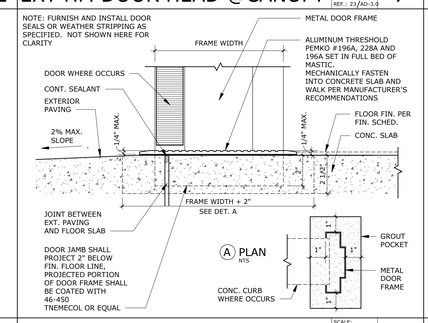

EXT THRESHOLD @ CONC FIN — SCALE: 3" = 1'-0" — REF.: / — 6

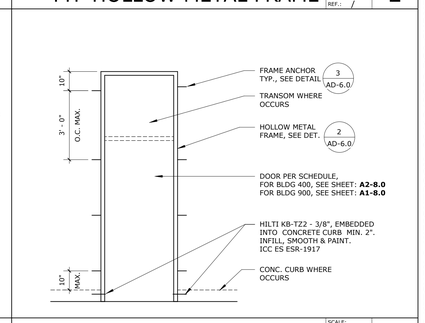

TYP HM DOOR FRAME ELEV — SCALE: 3/8" = 1'-0" — REF.: / — 1

GHS KITCHEN & WEIGHTROOM: 06/13/2022 DSA SUBMITTAL

STAMPS

LICENSED ARCHITECT — REGISTERED PROFESSIONAL ENGINEER — No. C-31040 — No. 12051-29 — STATE OF CALIFORNIA

IDENTIFICATION STAMP
DIV. OF THE STATE ARCHITECT
APP: 04-120895 INC:
REVIEWED FOR
SS ☑ FLS ☑ ACS ☑
DATE: 06/27/2022
DSA
FOR TRACKING PURPOSES ONLY

CONSULTANT BRANDING

RUHNAU CLARKE ARCHITECTS

PROJECT No. :1-30-55
6/21/2022 3:16:33 PM

DRAWN BY: CHECKED BY:

ISSUE No.____ DATE____ DESCRIPTION____
REVISION No.____ DATE____ DESCRIPTION____

RUHNAUCLARKE.COM
3775 TENTH STREET, RIVERSIDE CALIFORNIA 92501 (951) 684-4664 / 5751 PALMER WAY, SUITE C, CARLSBAD CALIFORNIA 92010 (760) 438 5899

GHS KITCHEN & WEIGHTROOM
GROSSMONT HIGH SCHOOL
1100 MURRAY DR, EL CAJON, CA 92020
GROSSMONT UNION HIGH SCHOOL

DOOR DETAILS

AD-6.0

1-30-55

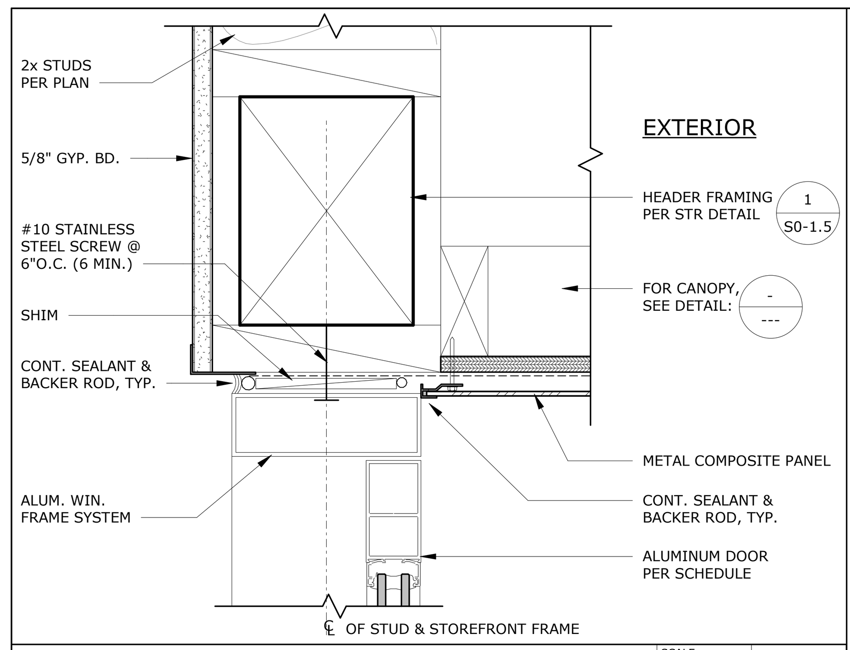

STOREFRONT DR HEAD @ MCP — SCALE: 3" = 1'-0" REF.: / — 30

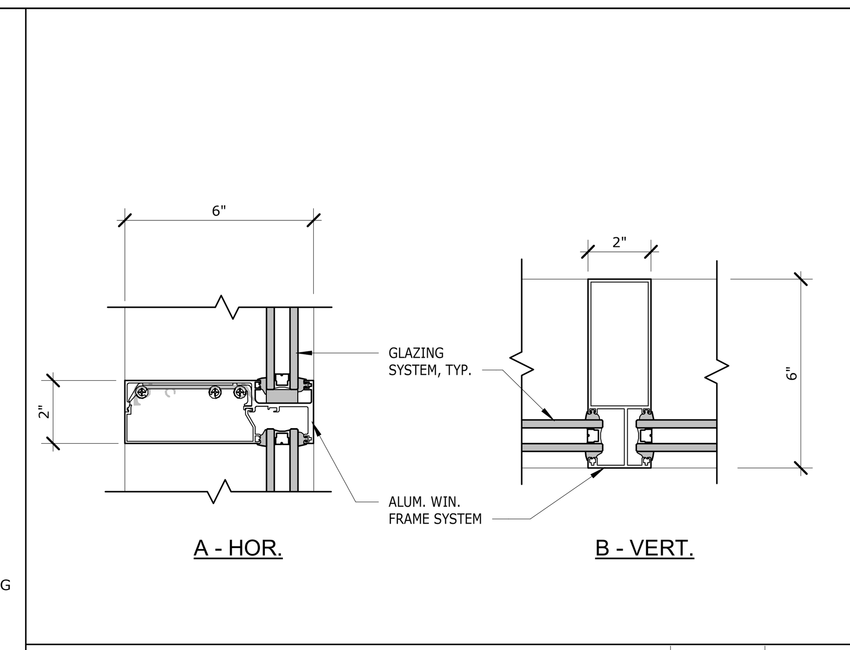

TYP ALUM EXT MULLIONS — SCALE: 3" = 1'-0" REF.: 6/A1-8.0 — 20

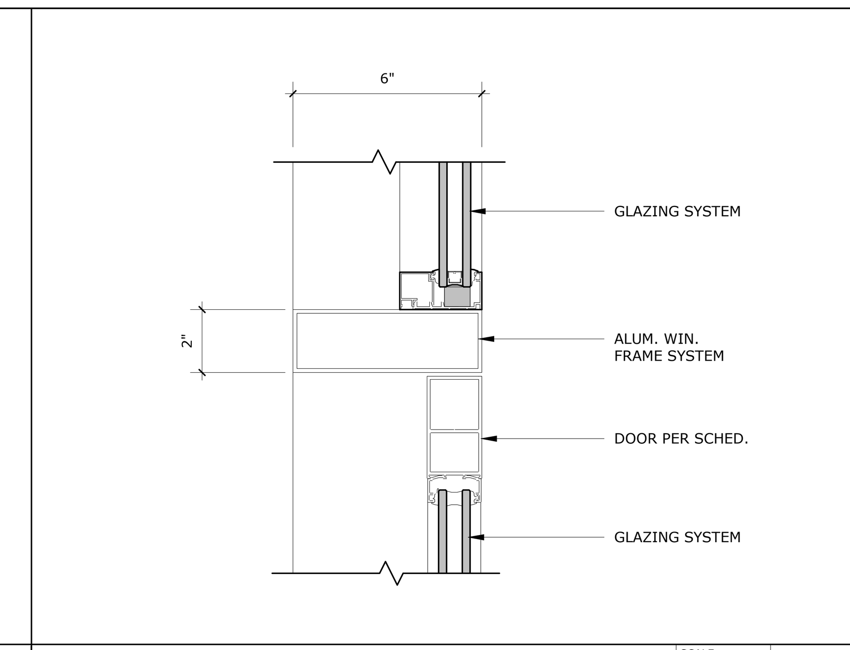

STOREFRONT @ TRANSOM — SCALE: 3" = 1'-0" REF.: 1/A1-8.0 — 15

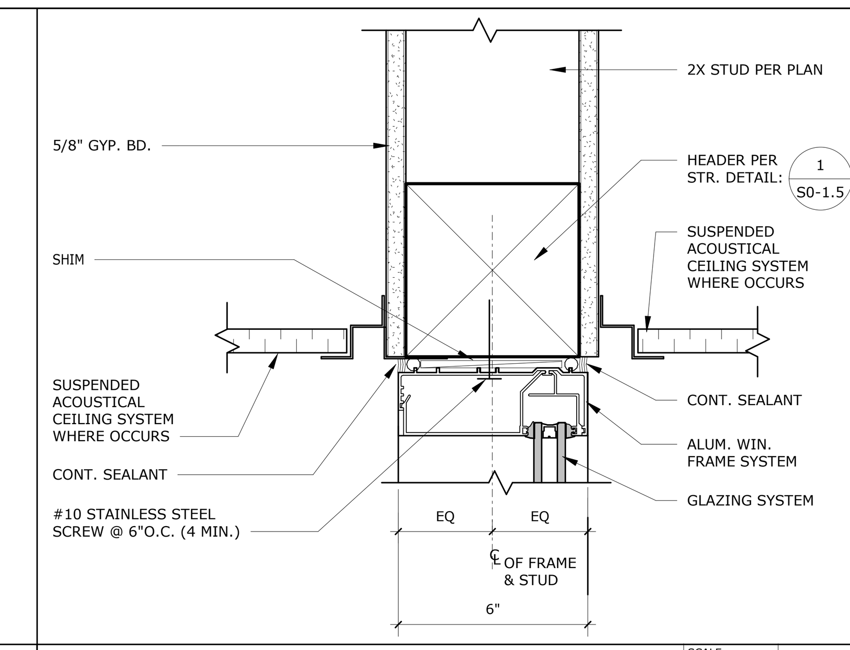

INT. ALUM WIN HEAD — SCALE: 3" = 1'-0" REF.: / — 10

STAMPS

LICENSED ARCHITECT ROGER CLARKE No. C-21340 Exp. 10-31-23 STATE OF CALIFORNIA

IDENTIFICATION STAMP
DIV. OF THE STATE ARCHITECT
APP: 04-120895 INC:
REVIEWED FOR
SS ☑ FLS ☑ ACS ☑
DATE: 06/27/2022

CONSULTANT BRANDING

RUHNAU CLARKE ARCHITECTS

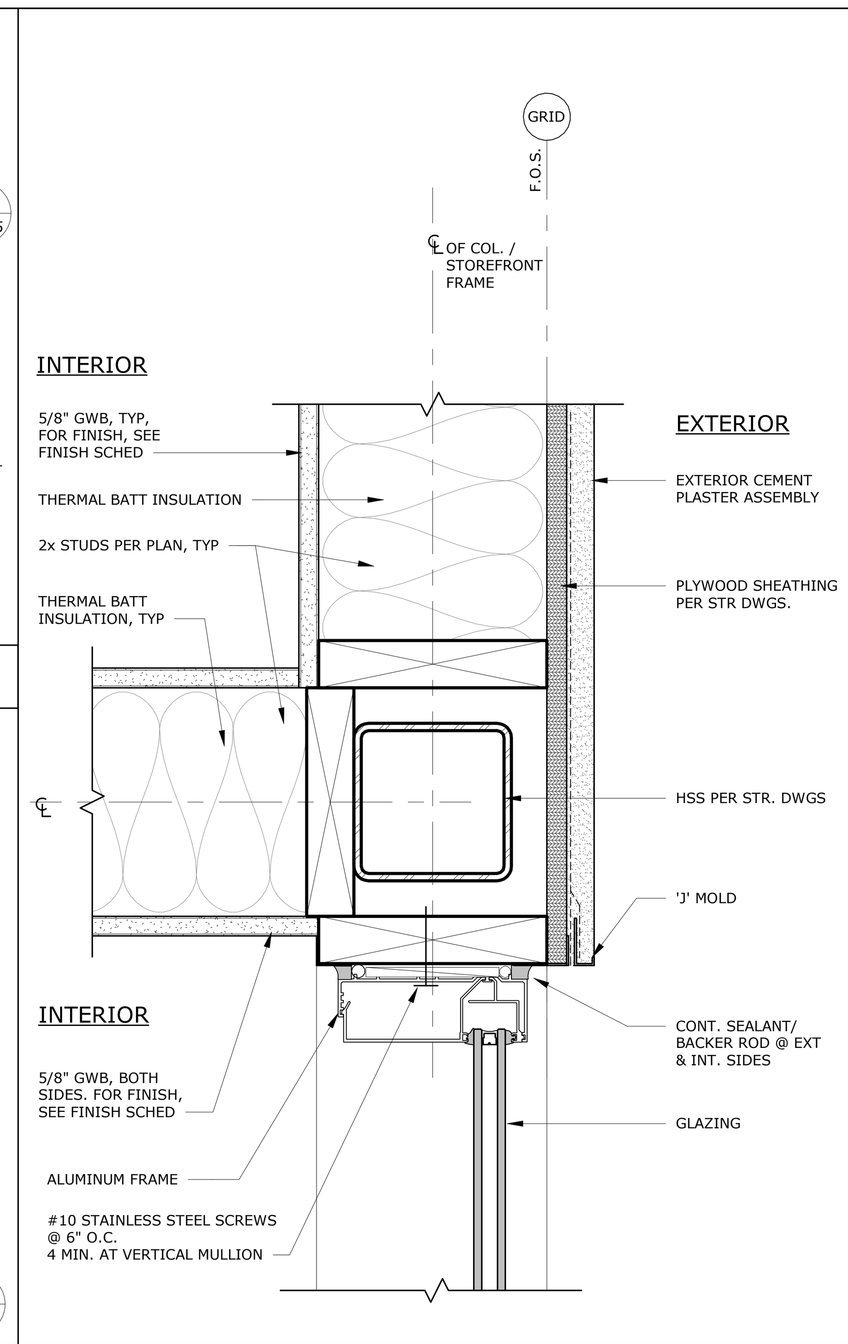

STOREFRONT JAMB @ CORNER — SCALE: 3" = 1'-0" REF.: / — 24

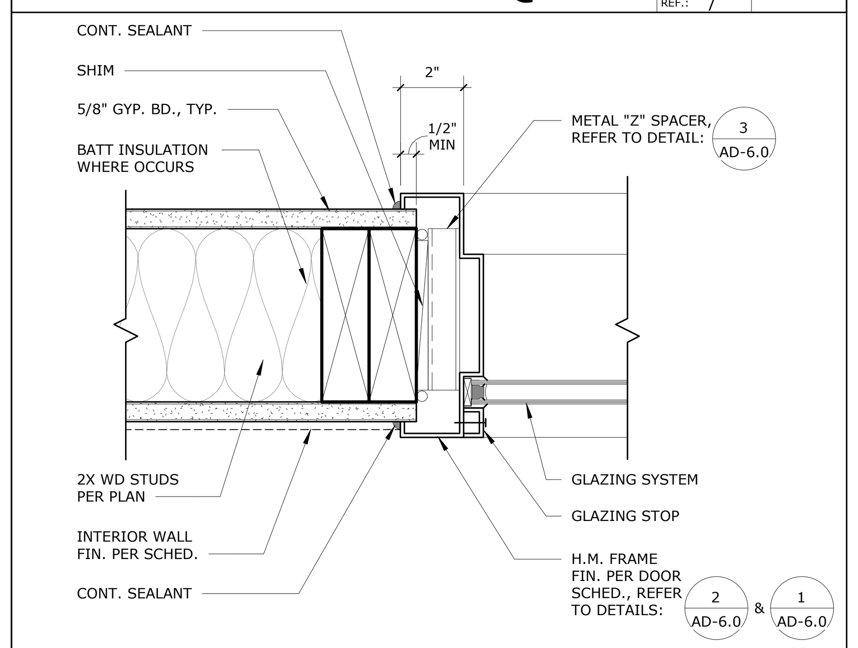

INT. HM. WIN. JAMB — SCALE: 3" = 1'-0" REF.: 5/A1-8.0 — 29

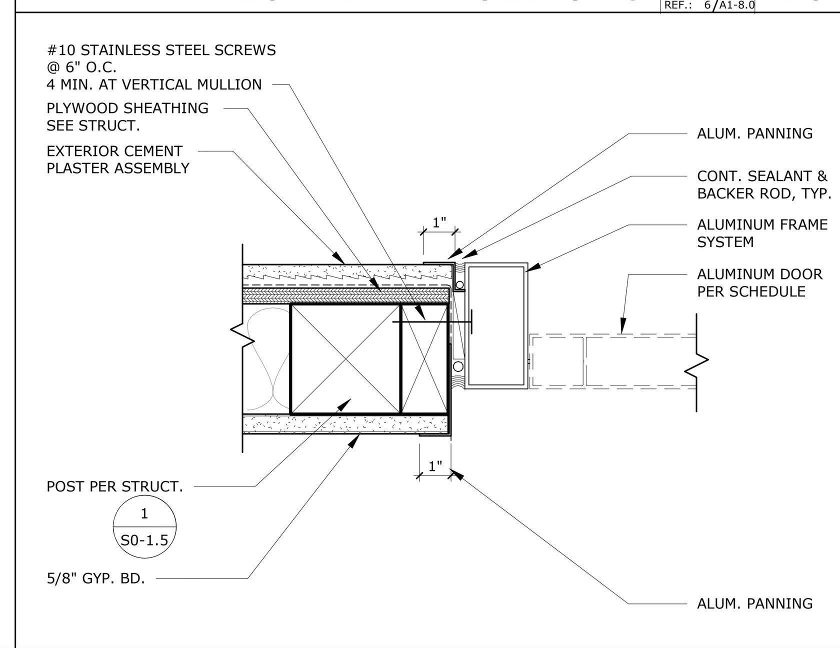

EXT. ALUM DOOR JAMB @WALL — SCALE: 3" = 1'-0" REF.: 1/A1-8.0 — 19

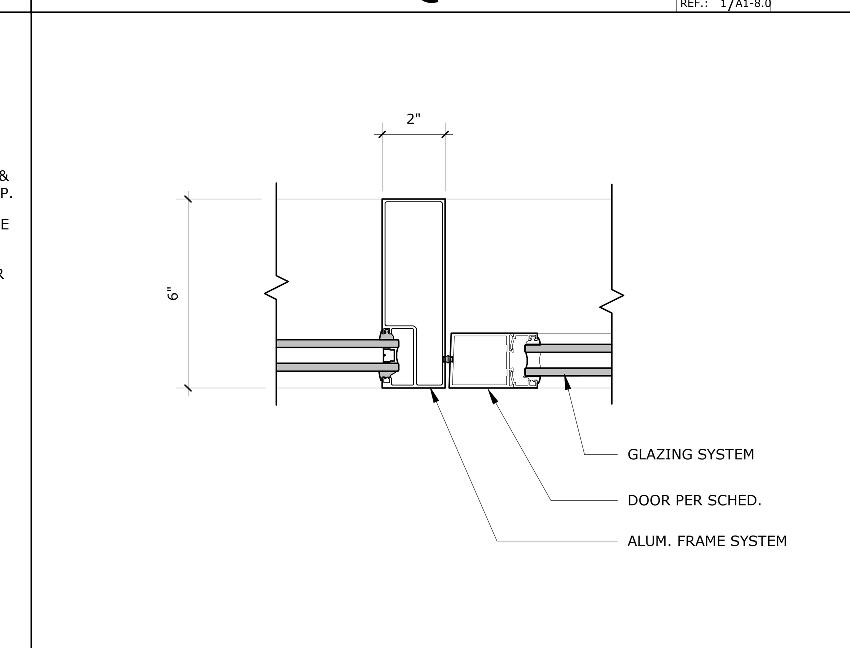

STOREFRONT @ SIDE LITE — SCALE: 3" = 1'-0" REF.: 2/A1-8.0 — 14

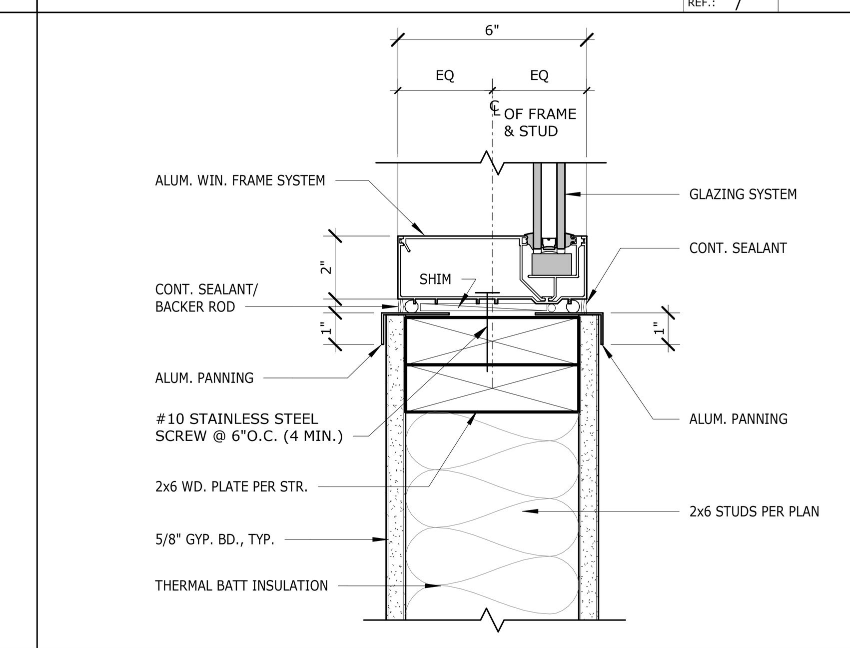

INT. ALUM WIN SILL/JAMB SIM — SCALE: 3" = 1'-0" REF.: / — 9

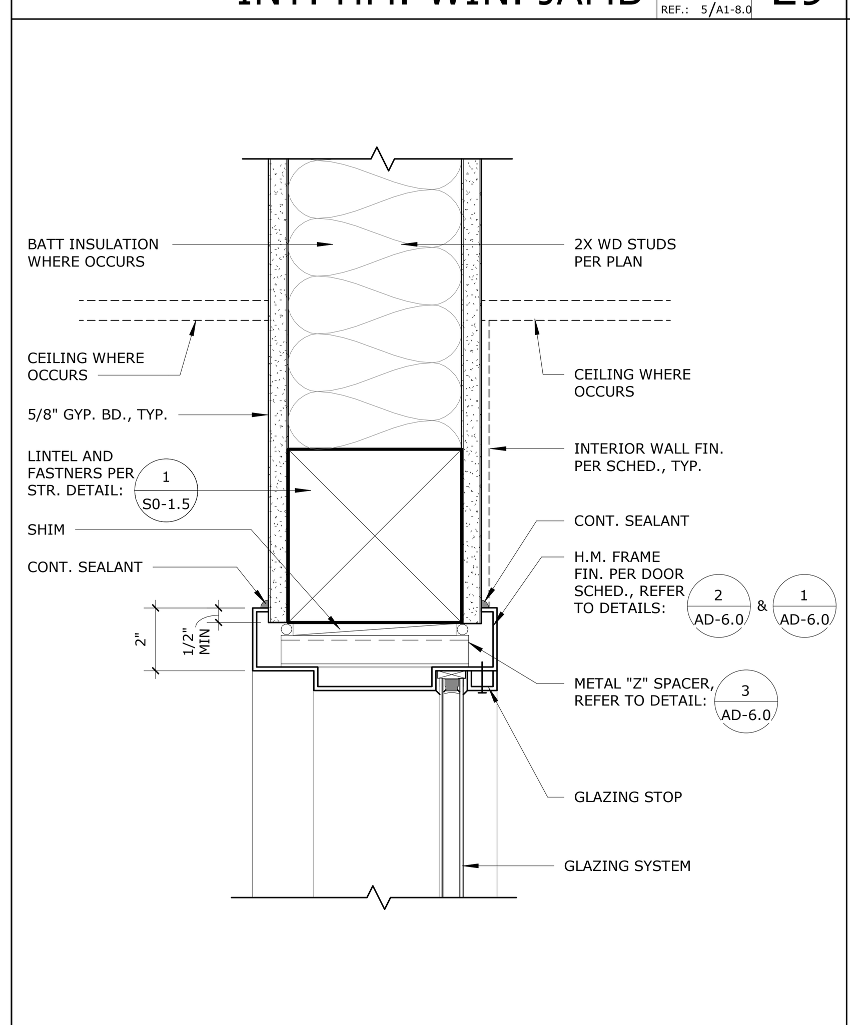

INT. HM .WIN. HEAD — SCALE: 3" = 1'-0" REF.: 5/A1-8.0 — 28

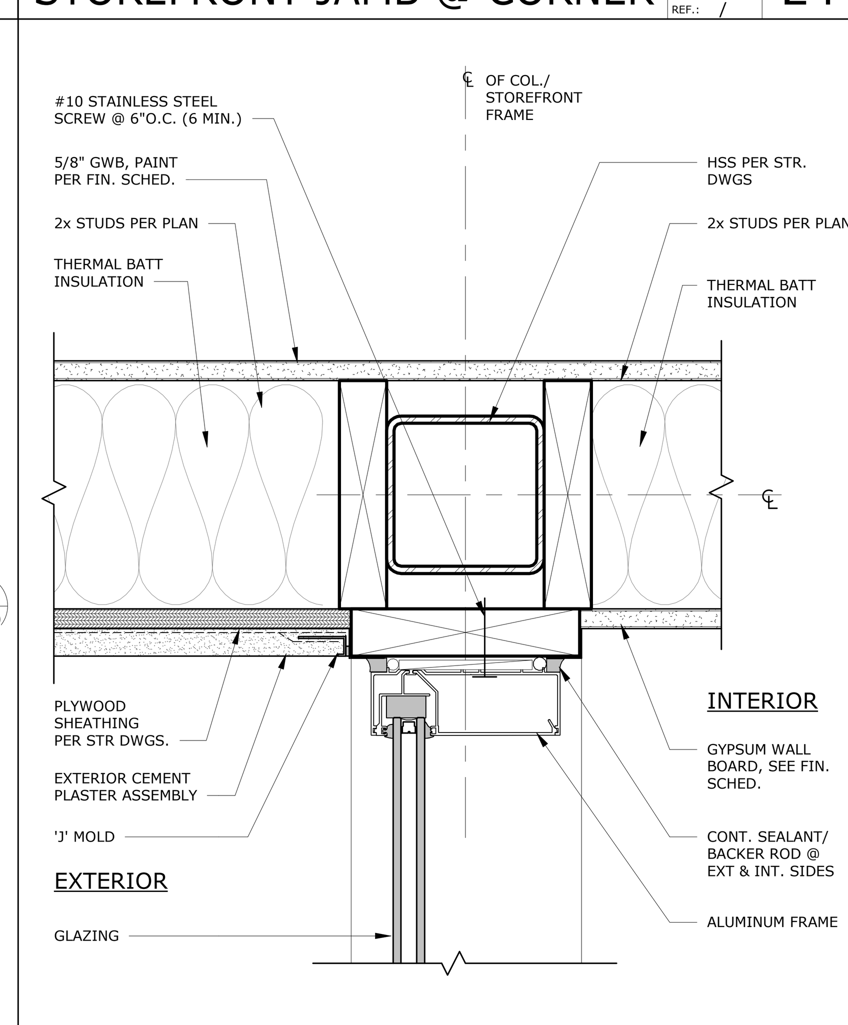

STOREFRONT JAMB@ENDWALL — SCALE: 3" = 1'-0" REF.: / — 23

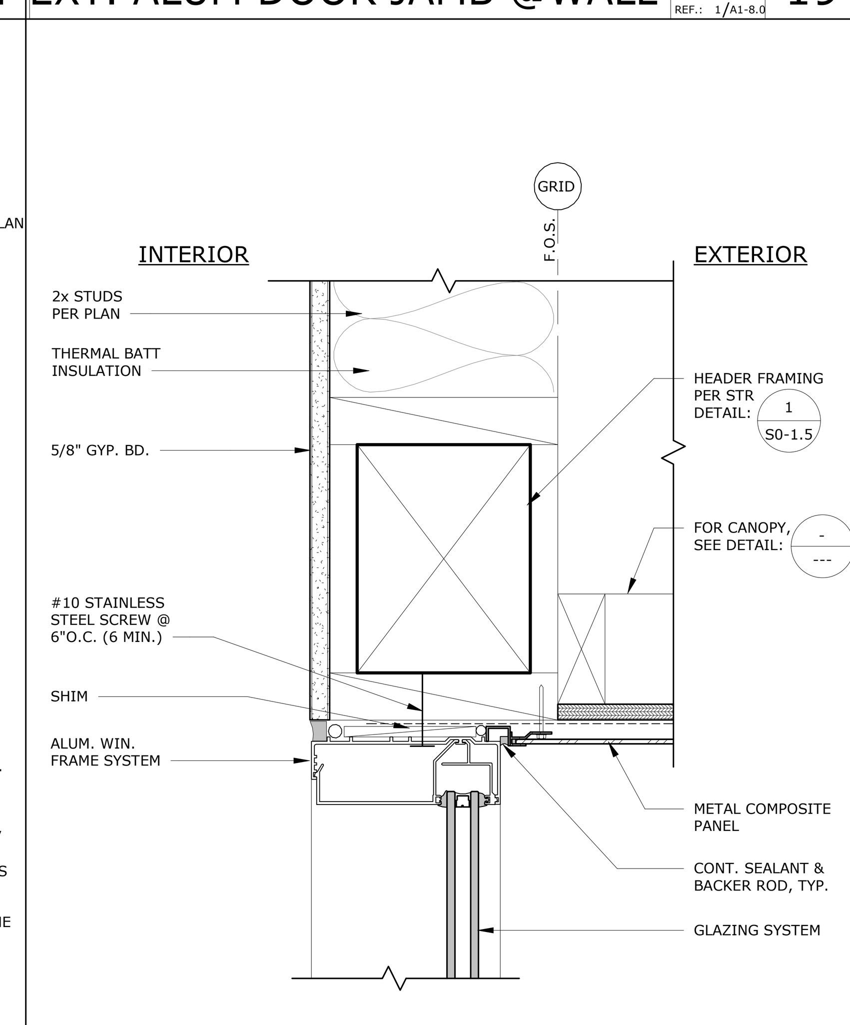

STOREFRONT HEAD @ CANOPY — SCALE: 3" = 1'-0" REF.: 21/AD-3.0 — 18

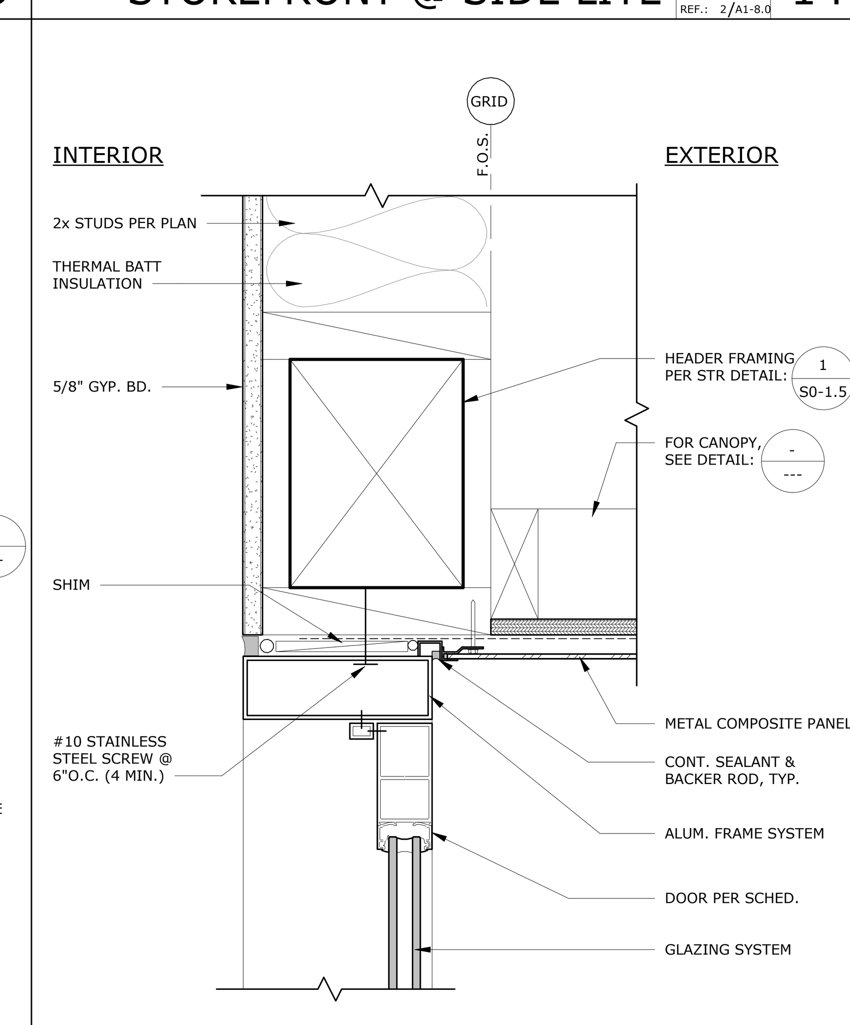

EXT AL DOOR HEAD @ CANOPY — SCALE: 3" = 1'-0" REF.: / — 13

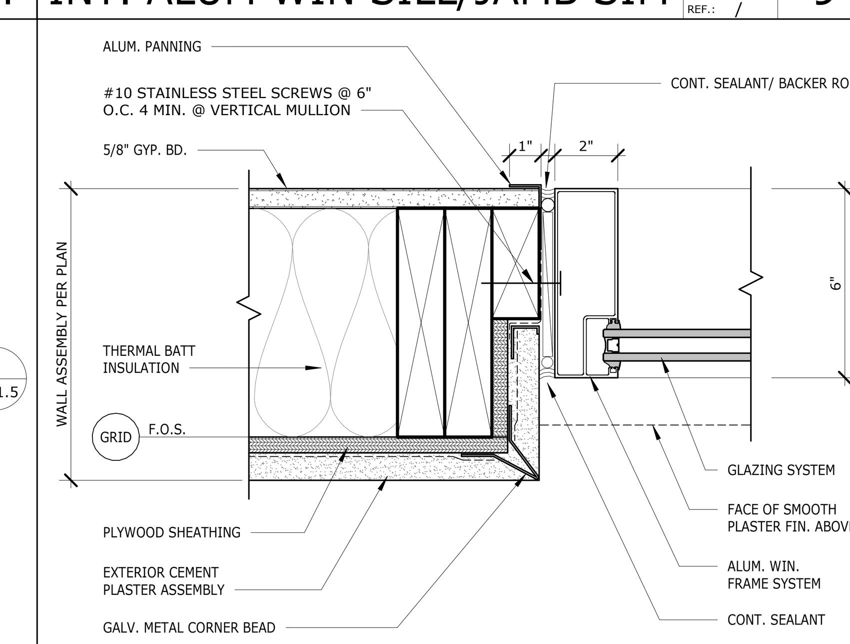

EXT. AL WIN JAMB @ CPL — SCALE: 3" = 1'-0" REF.: 3/A1-8.0 — 8

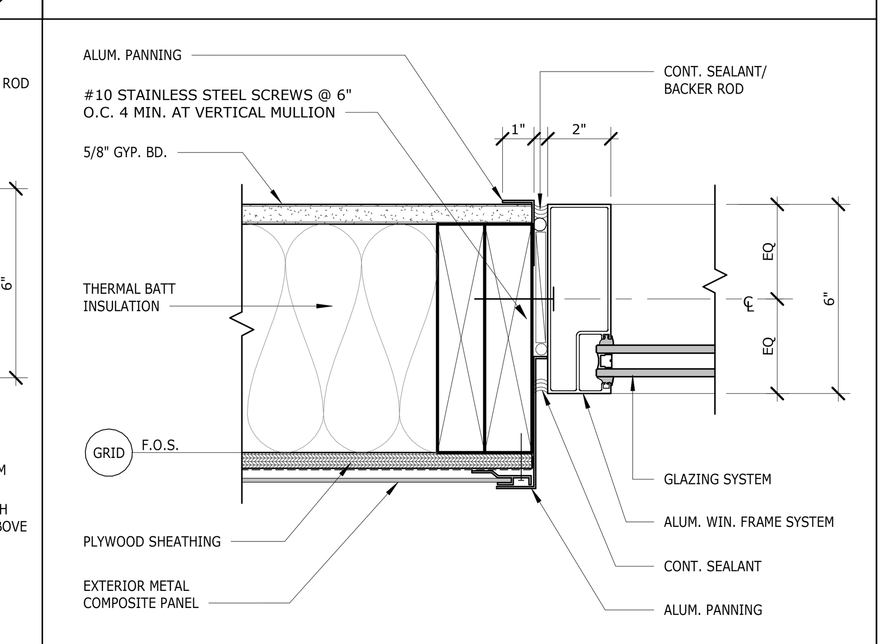

EXT. AL WIN JAMB @ MCP — SCALE: 3" = 1'-0" REF.: 7/A1-4.0 — 3

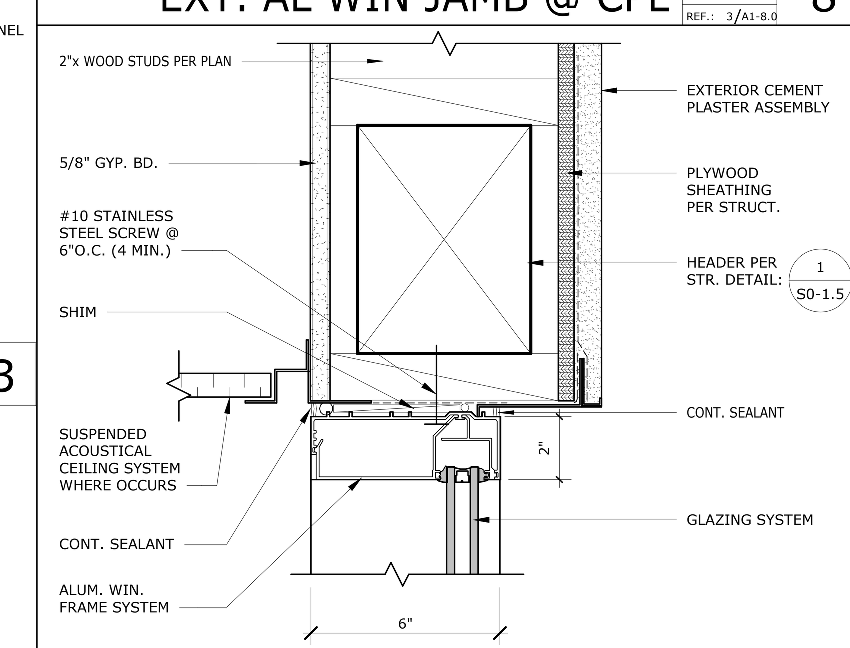

EXT. AL WIN HEAD @ CPL — SCALE: 3" = 1'-0" REF.: 1/A1-6.0 — 7

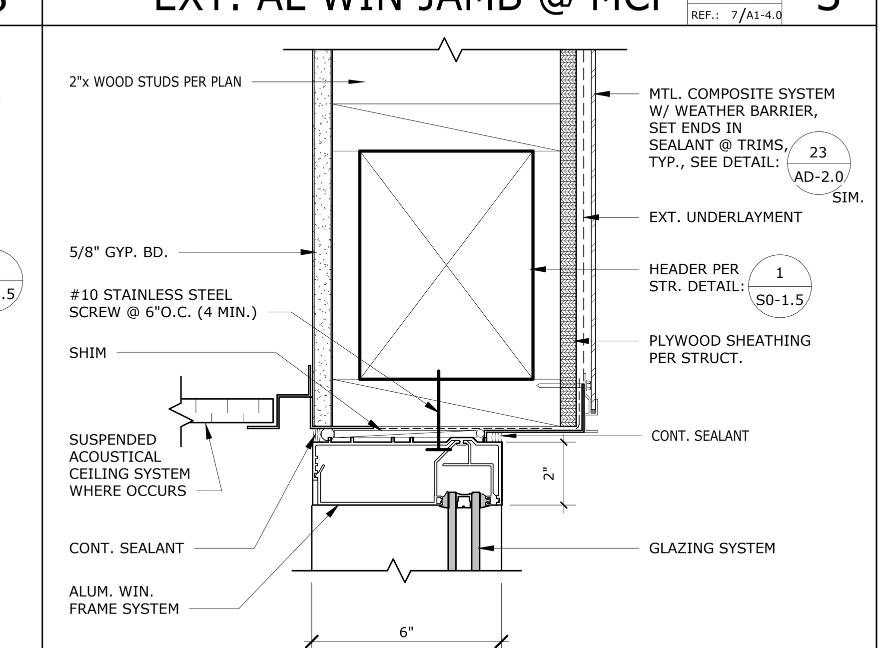

EXT. AL WIN HEAD @ MCP — SCALE: 3" = 1'-0" REF.: 7/A1-4.0 — 2

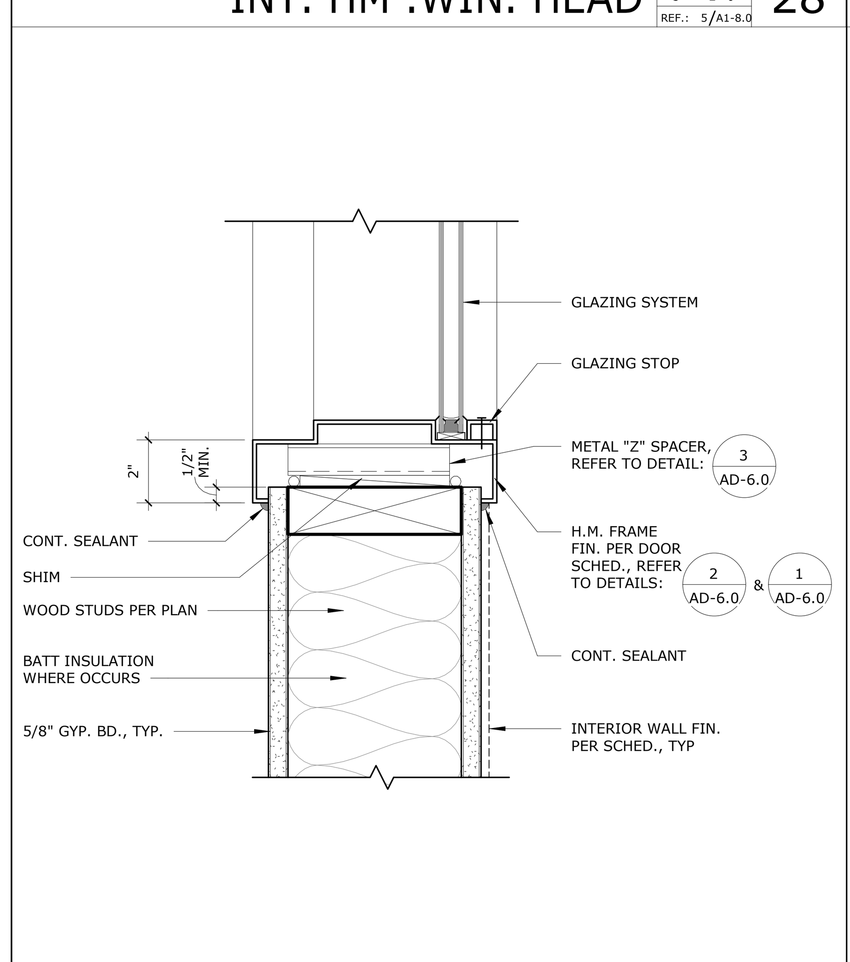

INT. HM. WIN. SILL — SCALE: 3" = 1'-0" REF.: 5/A1-8.0 — 26

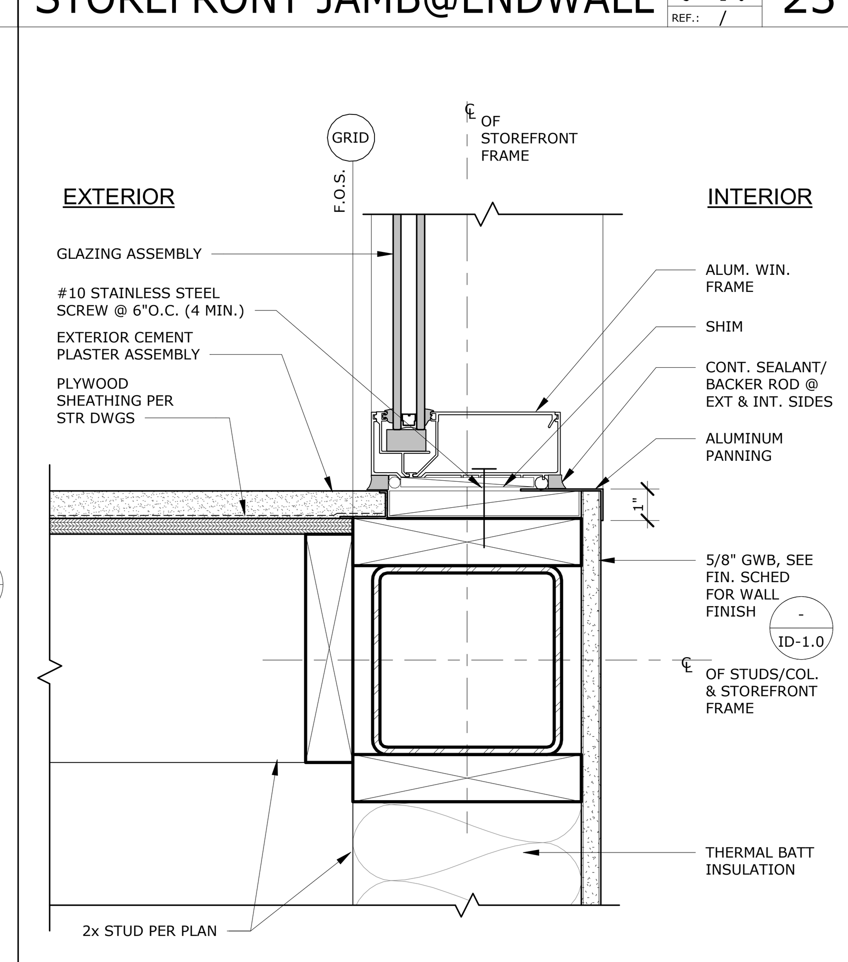

STOREFRONT JAMB @ COL — SCALE: 3" = 1'-0" REF.: / — 21

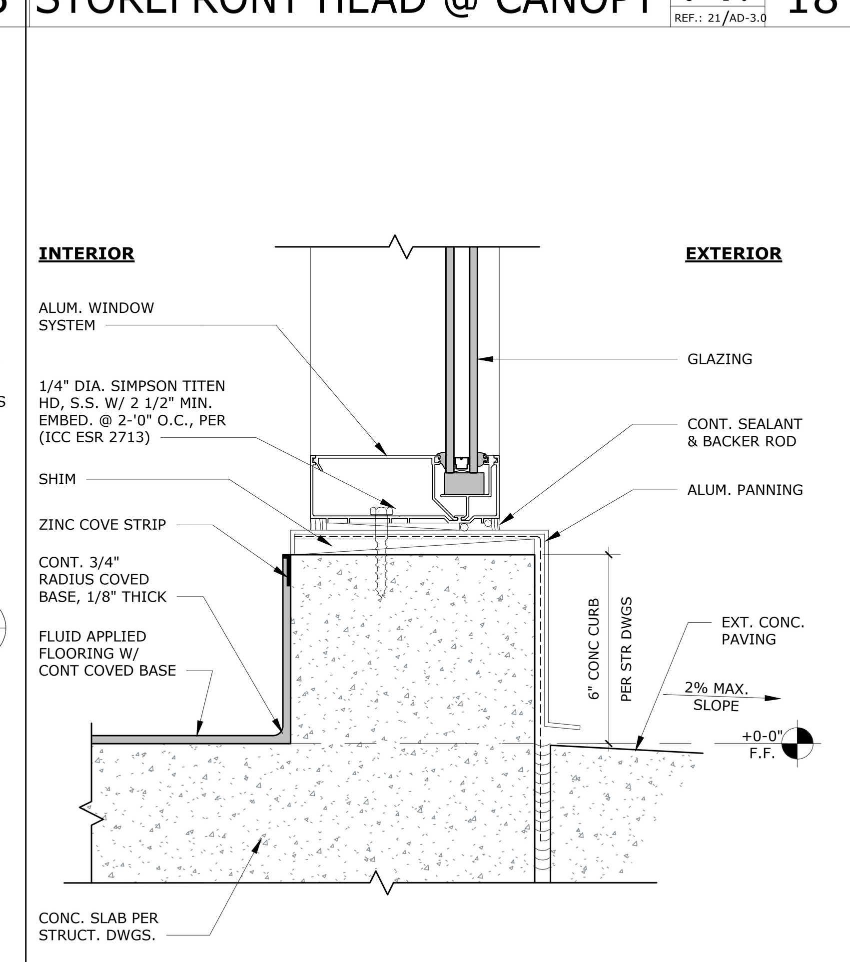

STOREFRONT SILL @ CURB — SCALE: 3" = 1'-0" REF.: 1/A2-6.0 — 16

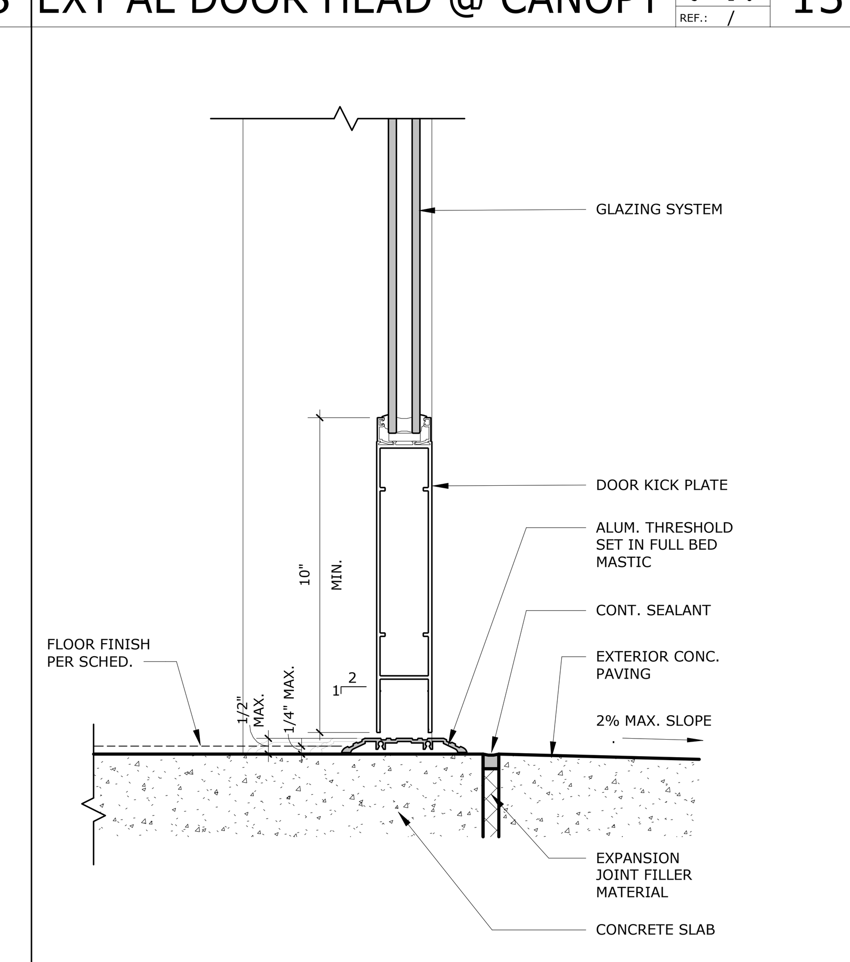

STOREFRONT THRESHOLD — SCALE: 3" = 1'-0" REF.: / — 11

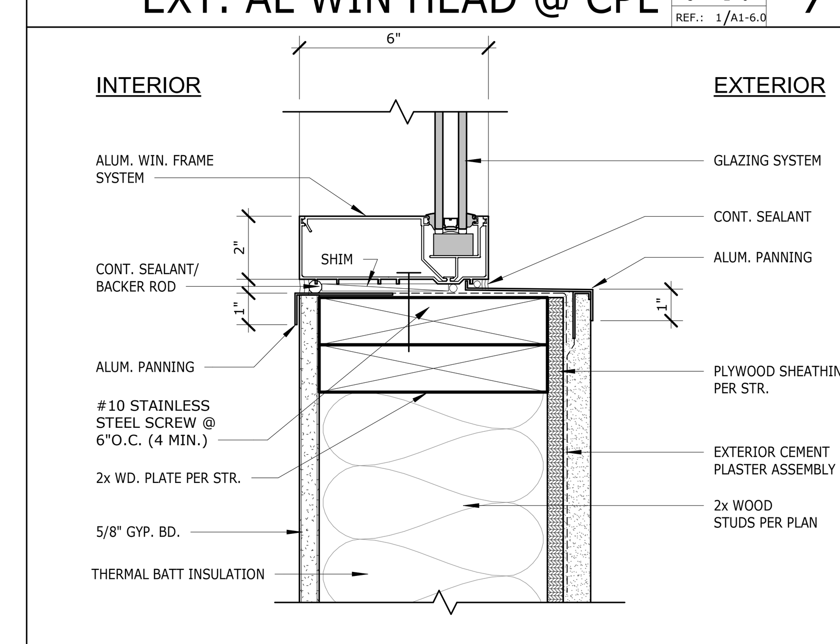

EXT. AL WIN SILL @ CPL — SCALE: 3" = 1'-0" REF.: 1/A1-6.0 — 6

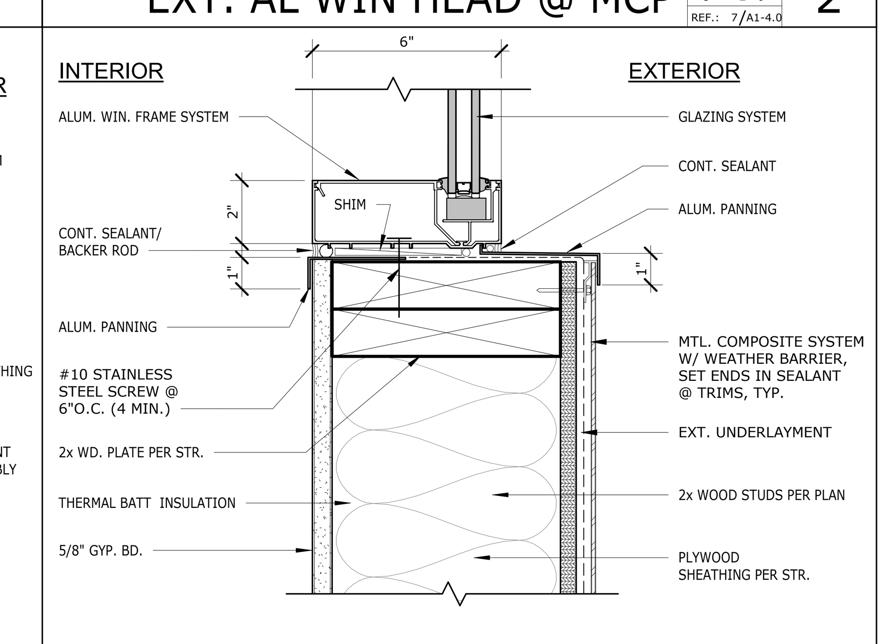

EXT. AL WIN SILL @ MCP — SCALE: 3" = 1'-0" REF.: / — 1

GHS KITCHEN & WEIGHTROOM: 06/13/2022 DSA SUBMITTAL

PROJECT No. :1-30-55
6/21/2022 3:16:34 PM

DRAWN BY: CHECKED BY:

ISSUE No.______ DATE________ DESCRIPTION______
ISSUE No.______ DATE________ DESCRIPTION______
ISSUE No.______ DATE________ DESCRIPTION______
ISSUE No.______ DATE________ DESCRIPTION______

REVISION No.______ DATE________ DESCRIPTION______
REVISION No.______ DATE________ DESCRIPTION______
REVISION No.______ DATE________ DESCRIPTION______
REVISION No.______ DATE________ DESCRIPTION______

RUHNAUCLARKE.COM
3775 TENTH STREET, RIVERSIDE CALIFORNIA 92501 (951) 684 4664 / 5751 PALMER WAY, SUITE C, CARLSBAD CALIFORNIA 92010 (760) 438 5899

GHS KITCHEN & WEIGHTROOM
GROSSMONT HIGH SCHOOL
1100 MURRAY DR, EL CAJON, CA 92020
GROSSMONT UNION HIGH SCHOOL

DOOR & WINDOW DETAILS

AD-6.1

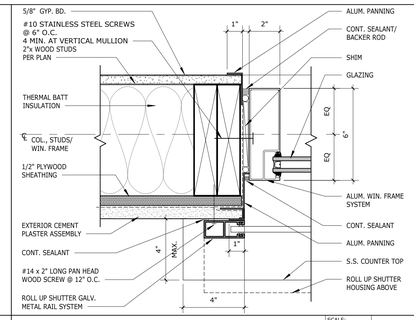

MTL ROLL-UP SHUTTER JAMB — SCALE: 3" = 1'-0" — REF.: 7/A1-8.0 — 25

STAMPS

LICENSED ARCHITECT — JAMES CLARKE — No. C-31940 — Exp. 12/31/22 — STATE OF CALIFORNIA

IDENTIFICATION STAMP
DIV. OF THE STATE ARCHITECT
APP: 04-120895 INC:
REVIEWED FOR
SS ☑ FLS ☑ ACS ☑
DATE: 06/27/2022
AGENCY
FILE NUMBER

CONSULTANT BRANDING

RUHNAU CLARKE ARCHITECTS

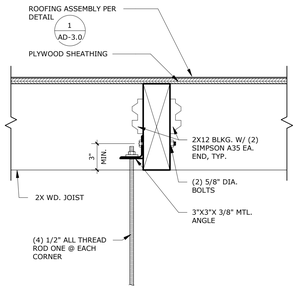

HANGER ROD CONNECTION IN-BETWEEN ROOF JOIST

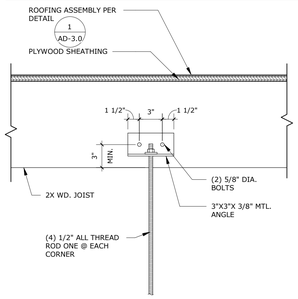

HANGER ROD CONNECTION AT ROOF JOIST

DOOR OPERATOR HANGER — SCALE: 1 1/2" = 1'-0" — REF.: / — 28

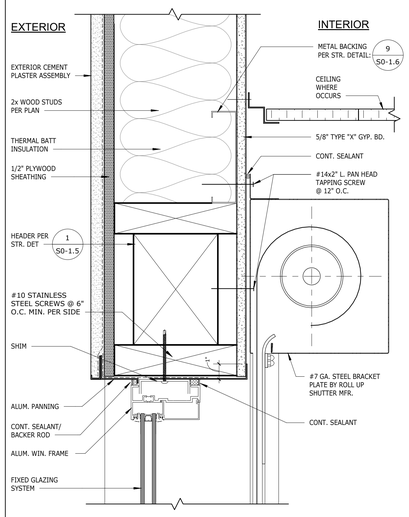

INT MTL ROLL-UP SHUTTER HD — SCALE: 3" = 1'-0" — REF.: 7/A1-8.0 — 23

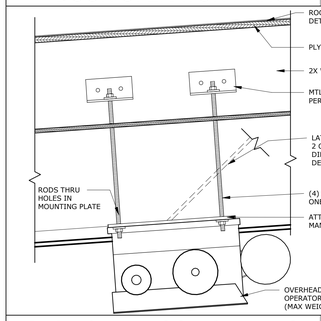

SECTIONAL DOOR OPERATOR — SCALE: 1 1/2" = 1'-0" — REF.: / — 27

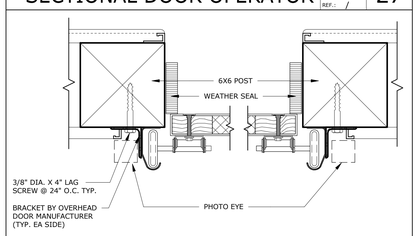

NOTES:

1. INSTALL DOOR ANGLE MOUNT TRACK, WEATHER SEALS & PHOTO EYE SENSORS PER MANUFACTURERS REQUIREMENTS.
2. DOOR TO BE CLOSER TO BE ACTIVATED BY FAIL SAFE SECURITY.

SECTIONAL DOOR JAMB — SCALE: 3" = 1'-0" — REF.: / — 26

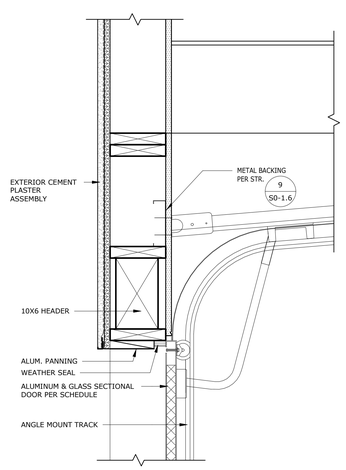

NOTES:

1. INSTALL DOOR ANGLE MOUNT TRACK, WEATHER SEALS & PHOTO TORSION SPRING PER MANUFACTURERS REQUIREMENTS.
2. DOOR CLOSER TO BE ACTIVATED BY FAIL SAFE SECURITY.
3. FOR DOOR JAMB TO WALL CONNECTION SEE DETAIL 26 AD-6.2

SECTIONAL DOOR HEAD — SCALE: 1 1/2" = 1'-0" — REF.: / — 20

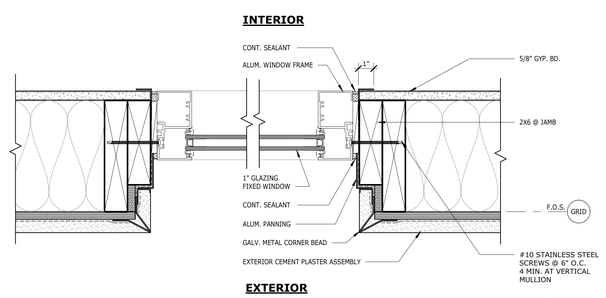

EXT ALUM. PASSTHRU @ FIXED WINDOW - PLAN VIEW — SCALE: 3" = 1'-0" — REF.: 7/A1-8.0 — 14

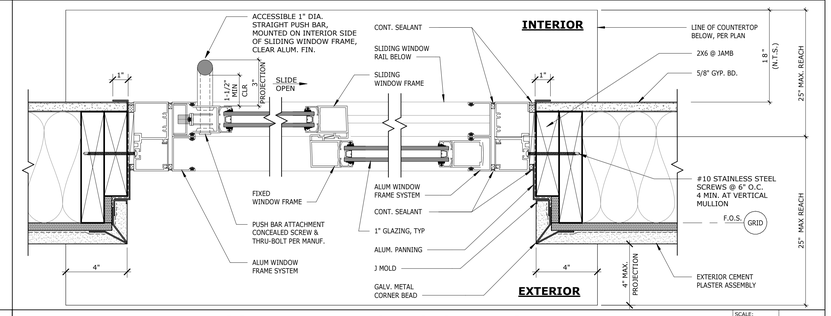

EXT. PASS-THRU WINDOW @ SLIDING FRAME - PLAN VIEW — SCALE: 3" = 1'-0" — REF.: 7/A1-8.0 — 4

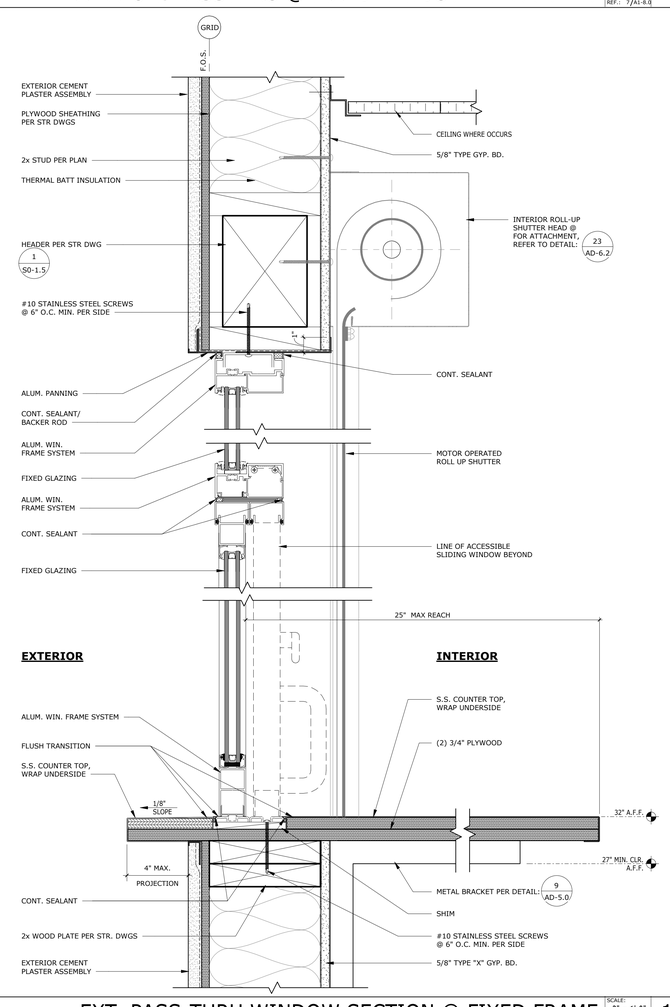

EXT. PASS-THRU WINDOW SECTION @ FIXED FRAME — SCALE: 3" = 1'-0" — REF.: 7/A1-8.0 — 11

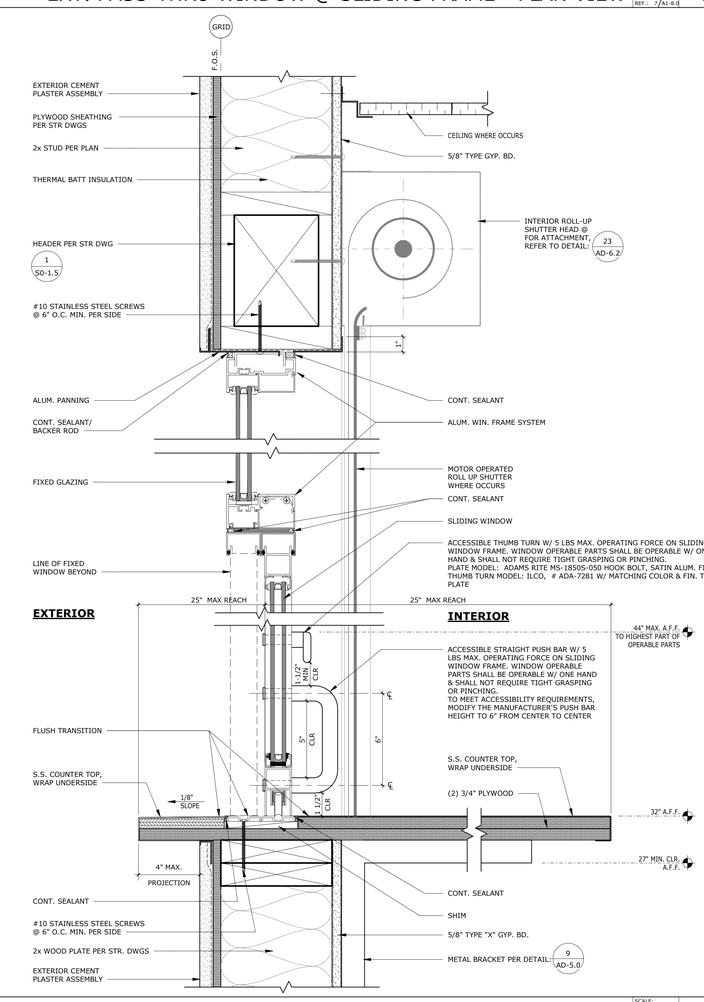

EXT. PASS-THRU WINDOW SECTION @ SLIDING FRAME — SCALE: 3" = 1'-0" — REF.: 2-4/A1-7.1 — 1

GHS KITCHEN & WEIGHTROOM: 06/13/2022 DSA SUBMITTAL

PROJECT No. :1-30-55
6/21/2022 3:16:35 PM

DRAWN BY: CHECKED BY:

ISSUE No.____	DATE____	DESCRIPTION____	REVISION No.____	DATE____	DESCRIPTION____
ISSUE No.____	DATE____	DESCRIPTION____	REVISION No.____	DATE____	DESCRIPTION____
ISSUE No.____	DATE____	DESCRIPTION____	REVISION No.____	DATE____	DESCRIPTION____
ISSUE No.____	DATE____	DESCRIPTION____	REVISION No.____	DATE____	DESCRIPTION____

RUHNAUCLARKE.COM
3775 TENTH STREET, RIVERSIDE CALIFORNIA 92501 (951) 684-4664 / 5751 PALMER WAY, SUITE C, CARLSBAD CALIFORNIA 92010 (760) 438 5899

GHS KITCHEN & WEIGHTROOM
GROSSMONT HIGH SCHOOL
1100 MURRAY DR, EL CAJON, CA 92020
GROSSMONT UNION HIGH SCHOOL

DOOR & WINDOW DETAILS

AD-6.2

1-30-55

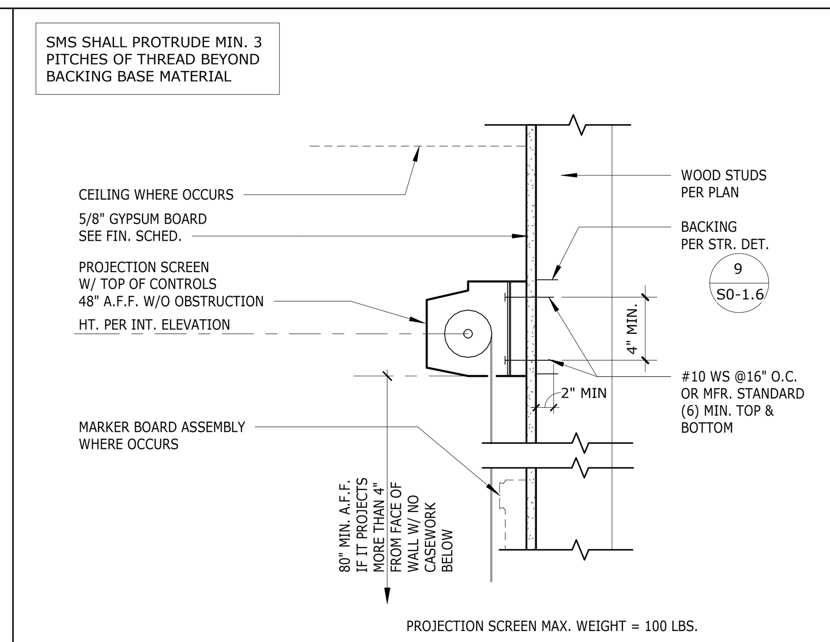

PROJECTION SCREEN | SCALE: 1 1/2" = 1'-0" | REF.: / | 15

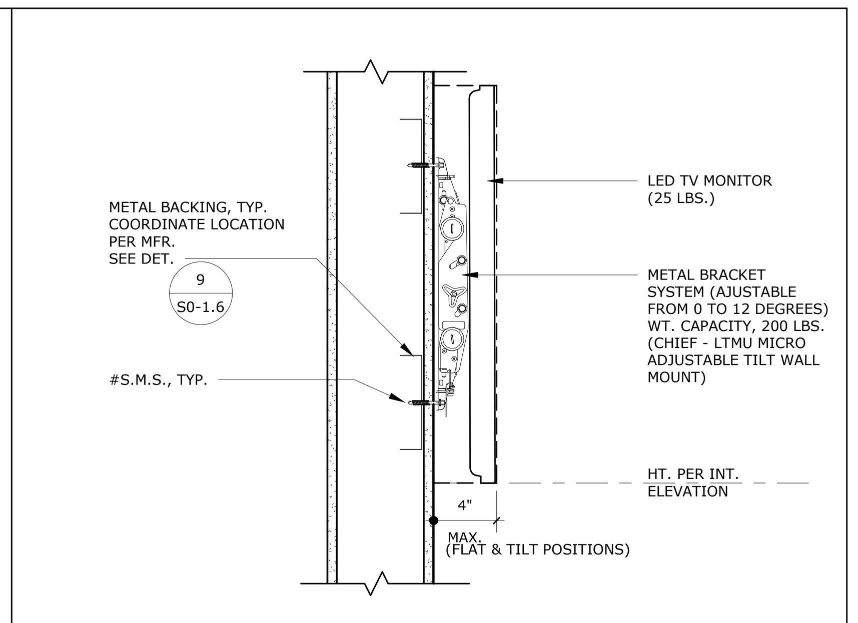

WALL MOUNTED MONITOR | SCALE: 1 1/2" = 1'-0" | REF.: / | 10

STAMPS

LICENSED ARCHITECT — ROGER CLARKE — No. C-21340 — Exp. 10-31-23 — STATE OF CALIFORNIA

IDENTIFICATION STAMP
DIV. OF THE STATE ARCHITECT
APP: 04-120895 INC:
REVIEWED FOR
SS ☑ FLS ☑ ACS ☑
DATE: 06/27/2022

CONSULTANT BRANDING

RUHNAU
CLARKE
ARCHITECTS

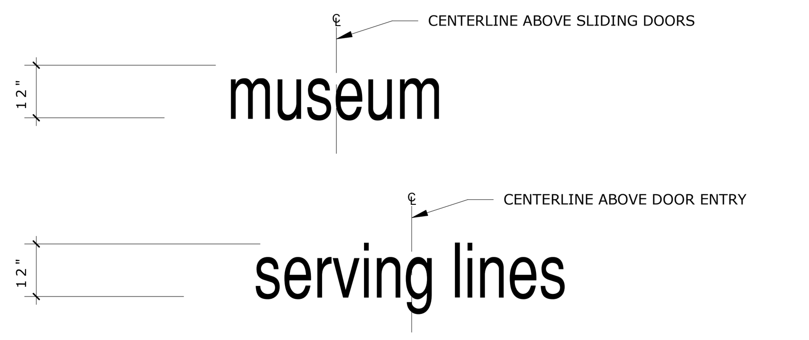

MAIN AREA ID SIGN - EXTERIOR
INDIVIDUAL CAST METAL LETTERS BY GEMINI, TYPEFACE: 12" TALL CLEAR ANODIZED ALUMINUM LETTERS. DIMENSIONAL SIGNAGE: 18"Hx3"D EXTERIOR METAL DIMENSIONAL LETTERS, FRONT FACE TO MATCH P-6. RETURN TO MATCH P-2, FONT: HELVETICA, FONT & NOMENCLATURE TO BE REVIEWED AND APPROVED BY DISTRICT. FACE MOUNTED LETTERS, STUD INSTALLATION, PROJECTED JAM NUT MOUNTING, PER GEMINI'S RECOMMENDATION. STUD-MOUNTED TO EXTERIOR STUCCO, TILE OR METAL SURFACE, STAND-OFF 1", PER GEMINI'S RECOMMENDATION. LOCATE AS SHOWN ON PLANS. PLACEMENT PER ARCHITECT'S DRAWINGS. DISTRICT TO APPROVE FINAL SIGN DESIGN.

FIELD VERIFY AREA DIMENSIONS AND COORDINATE WITH STRUCTURAL ENGINEERING. FINAL LAYOUT & LETTER SPACING TO BE APPROVED BY SIGNAGE CONSULTANTS PRIOR TO FABRICATION AND INSTALL.

MAIN AREA ID | SCALE: 1/2" = 1'-0" | REF.: / | 29

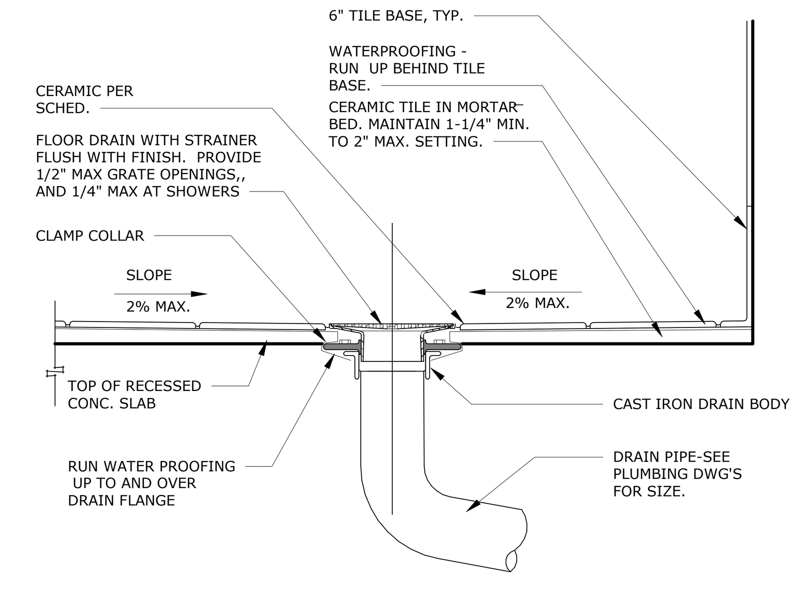

FLOOR DRAIN | SCALE: 1 1/2" = 1'-0" | REF.: / | 9

NOTE : UTILITY SHELF TO BE MOUNTED ON ADJACENT WALL FROM MOP SINK FAUCET, REFER TO PLUMBING DWGS.

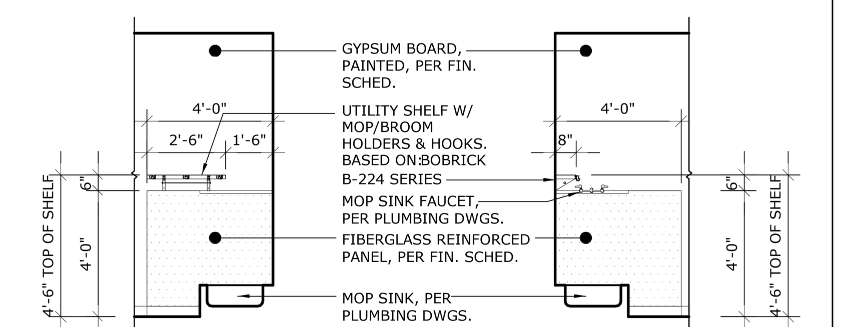

TYPICAL FOR ALL CUSTODIAN CLOSETS

MOP SINK | SCALE: 1/4" = 1'-0" | REF.: / | 4

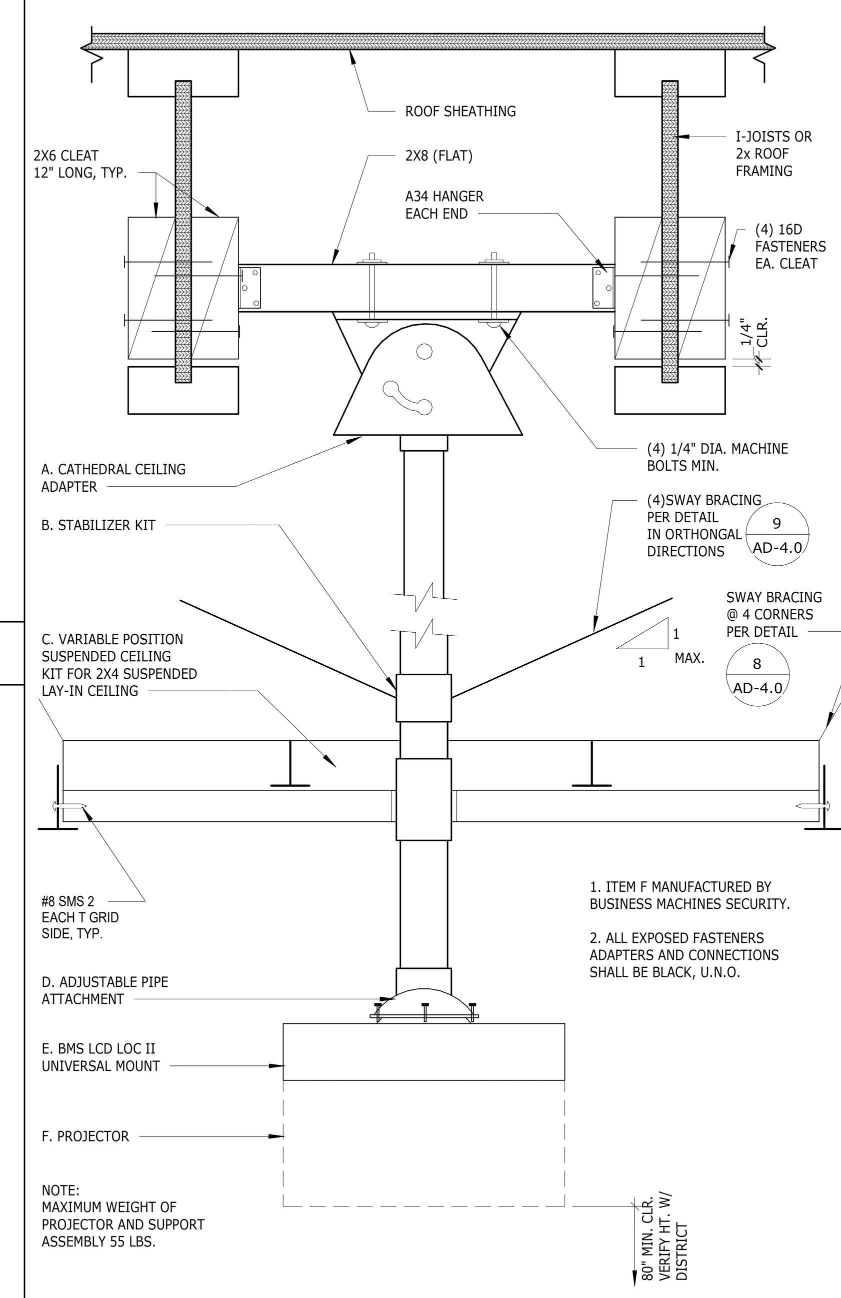

PROJECTOR HANGER @ ACT | SCALE: 3" = 1'-0" | REF.: / | 13

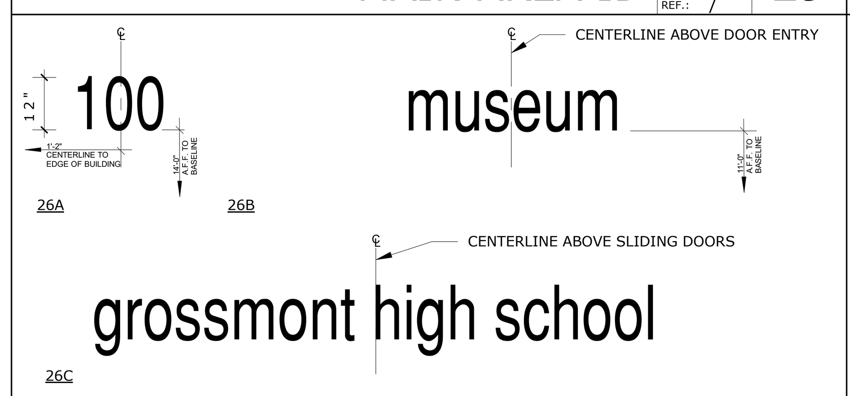

SCHOOL ADDRESS AND MAIN AREA ID SIGN - EXTERIOR
INDIVIDUAL CAST METAL LETTERS BY GEMINI, TYPEFACE: 12" TALL CLEAR ANODIZED ALUMINUM LETTERS. DIMENSIONAL SIGNAGE: 18"Hx3"D EXTERIOR METAL DIMENSIONAL LETTERS, FRONT FACE TO MATCH P-6. RETURN TO MATCH P-2, FONT: HELVETICA, FONT & NOMENCLATURE TO BE REVIEWED AND APPROVED BY DISTRICT. FACE MOUNTED LETTERS, STUD INSTALLATION, PROJECTED JAM NUT MOUNTING, PER GEMINI'S RECOMMENDATION. STUD-MOUNTED TO EXTERIOR STUCCO, TILE OR METAL SURFACE, STAND-OFF 1", PER GEMINI'S RECOMMENDATION. LOCATE AS SHOWN ON PLANS. PLACEMENT PER ARCHITECT'S DRAWINGS. DISTRICT TO APPROVE FINAL SIGN DESIGN.

FIELD VERIFY AREA DIMENSIONS AND COORDINATE WITH STRUCTURAL ENGINEERING. FINAL LAYOUT & LETTER SPACING TO BE APPROVED BY SIGNAGE CONSULTANTS PRIOR TO FABRICATION AND INSTALL.

ADDRESS & MAIN AREA ID | SCALE: 1/2" = 1'-0" | REF.: / | 28

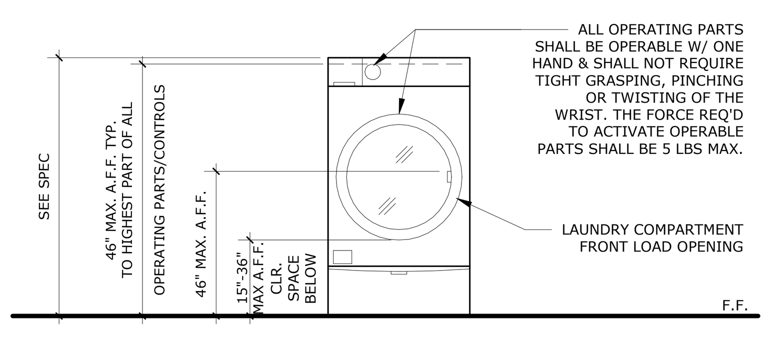

FRONT VIEW ELEVATION

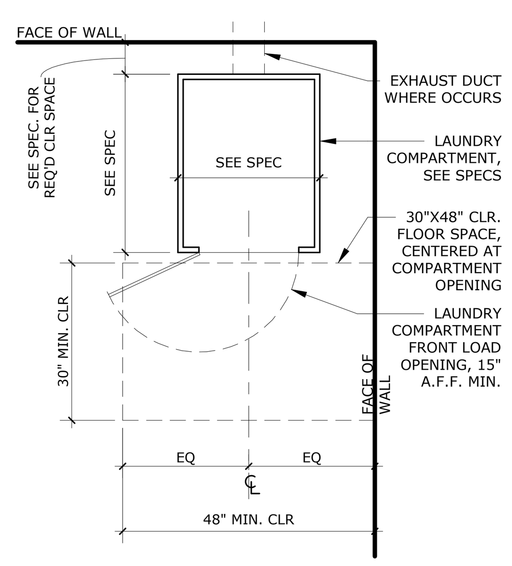

PLAN VIEW @ PARALLEL APPROACH

ACCESSIBLE LAUNDRY COMPARTMENT | SCALE: 1/2" = 1'-0" | REF.: / | 18

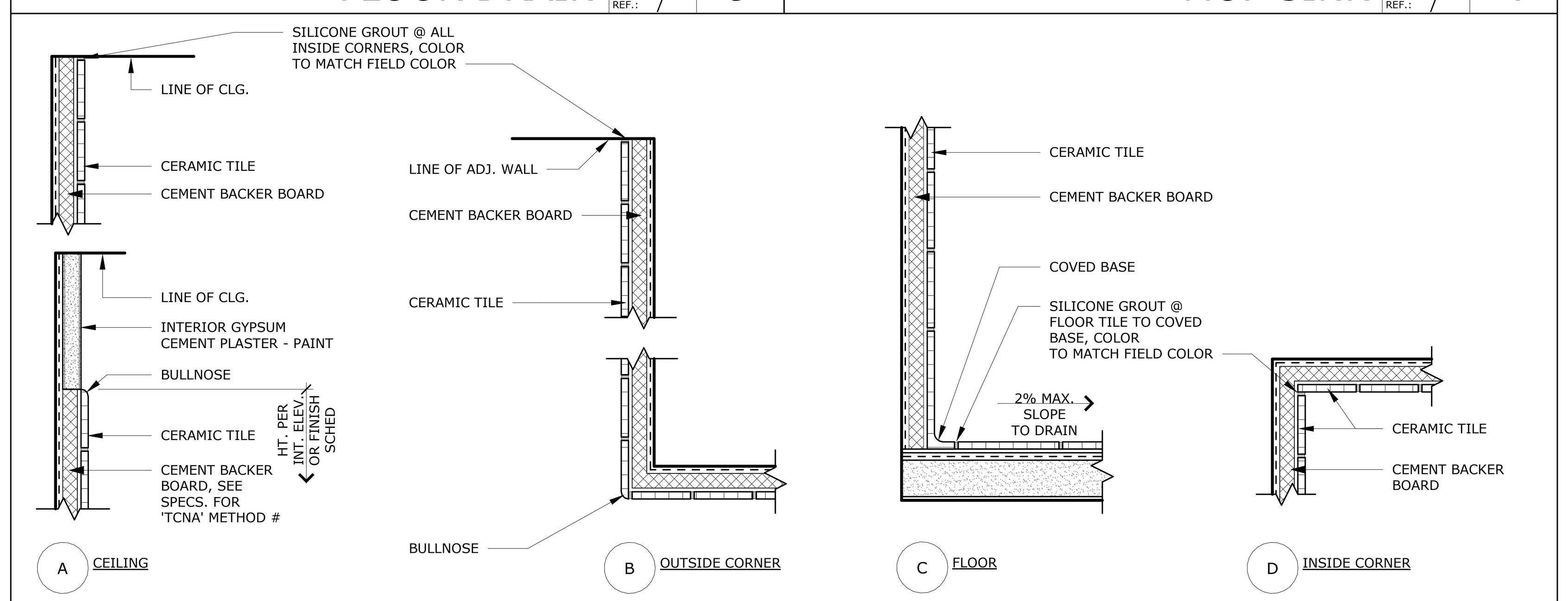

TYP CERAMIC TILE DETAILS | SCALE: 3" = 1'-0" | REF.: / | 3

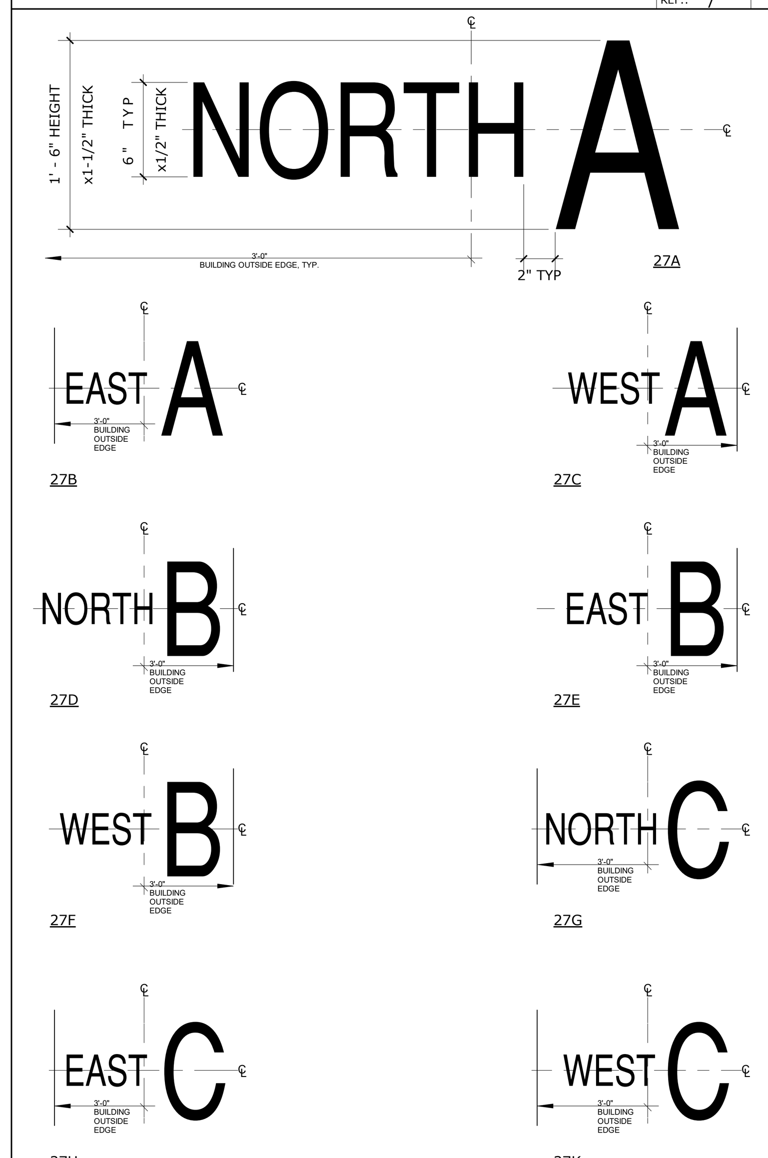

BUILDING ID LETTERS (FIRE MARSHAL) ID SIGN - EXTERIOR
INDIVIDUAL CAST METAL LETTERS BY GEMINI, TYPEFACE: PRE-FINISHED, PAINTED FINISH CUSTOM COLOR BY GEMINI TO MATCH P-6

STUD INSTALLATION, PROJECTED JAM NUT MOUNTING, PER GEMINI'S RECOMMENDATION, STUD-MOUNTED TO EXTERIOR STUCCO SURFACE, STAND-OFF 1", 25'-0" HIGH FROM GROUND TO BOTTOM OF LARGER LETTER. LOCATED AS SHOWN ON PLANS.

BUILDING ID LETTERS | SCALE: 1/2" = 1'-0" | REF.: / | 26

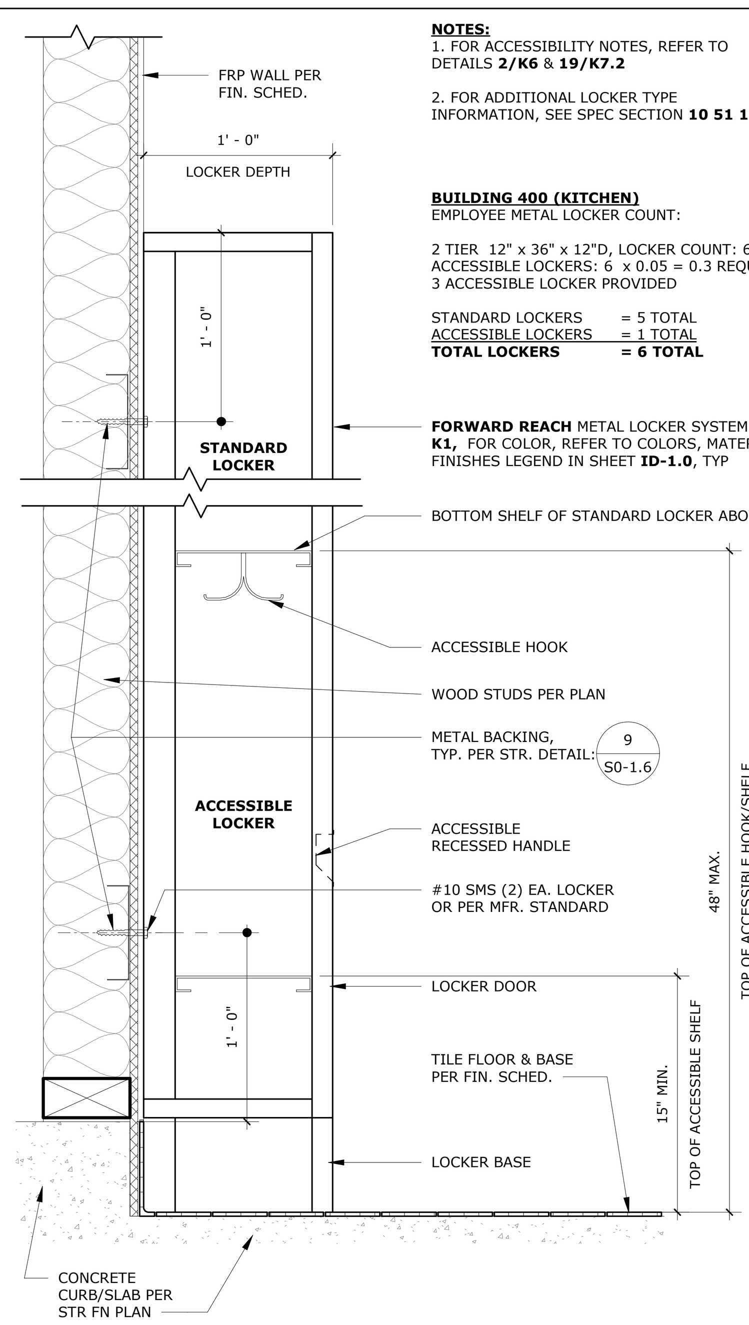

NOTES:
1. FOR ACCESSIBILITY NOTES, REFER TO DETAILS **2/K6** & **19/K7.2**

2. FOR ADDITIONAL LOCKER TYPE INFORMATION, SEE SPEC SECTION **10 51 13**

BUILDING 400 (KITCHEN)
EMPLOYEE METAL LOCKER COUNT:

2 TIER 12" x 36" x 12"D, LOCKER COUNT: 6 TOTAL
ACCESSIBLE LOCKERS: 6 x 0.05 = 0.3 REQUIRED;
3 ACCESSIBLE LOCKER PROVIDED

STANDARD LOCKERS = 5 TOTAL
ACCESSIBLE LOCKERS = 1 TOTAL
TOTAL LOCKERS = 6 TOTAL

FORWARD REACH METAL LOCKER SYSTEM PER **K1**, FOR COLOR, REFER TO COLORS, MATERIALS & FINISHES LEGEND IN SHEET **ID-1.0**, TYP

BOTTOM SHELF OF STANDARD LOCKER ABOVE

ACCESSIBLE HOOK

WOOD STUDS PER PLAN

METAL BACKING, TYP. PER STR. DETAIL: 9 S0-1.6

ACCESSIBLE RECESSED HANDLE

#10 SMS (2) EA. LOCKER OR PER MFR. STANDARD

LOCKER DOOR

TILE FLOOR & BASE PER FIN. SCHED.

LOCKER BASE

LOCKER COUNT / ATTACHMENT | SCALE: 1 1/2" = 1'-0" | REF.: / | 21

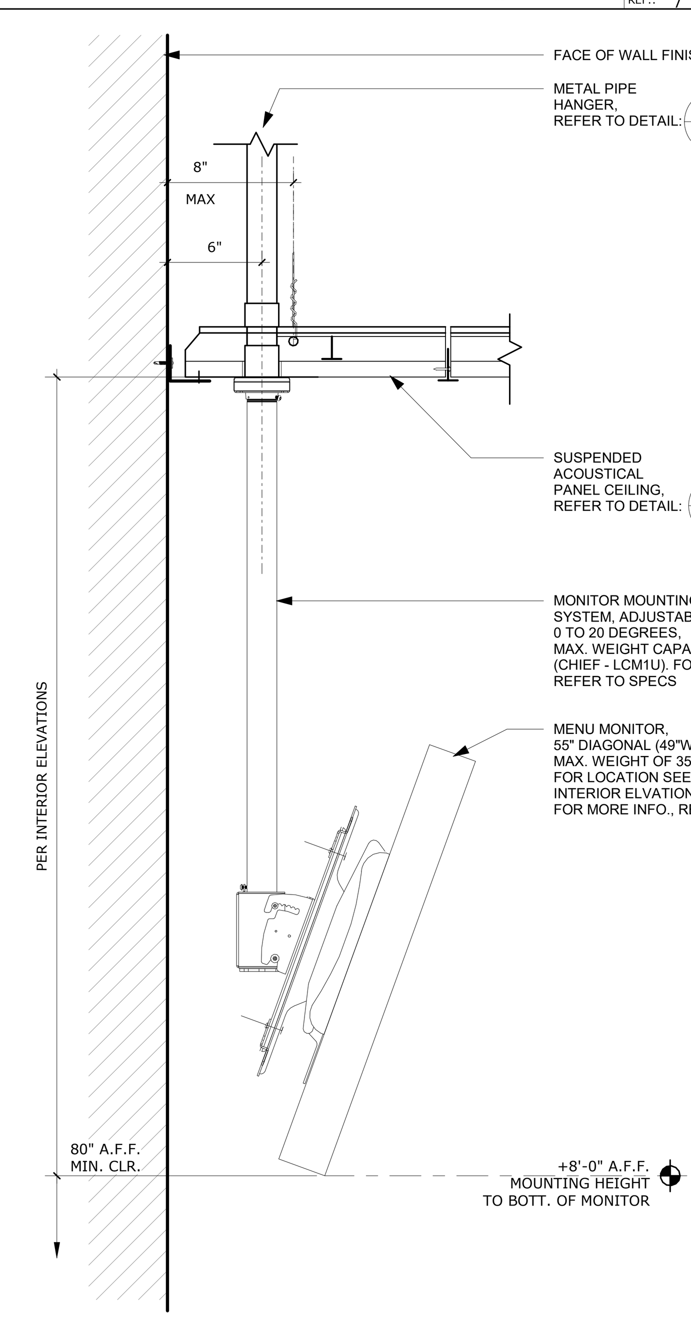

CLG MTD MONITOR @ ACT | SCALE: 1 1/2" = 1'-0" | REF.: / | 11

FIRE EXTINGUISHER UL-RATING PER SPECS

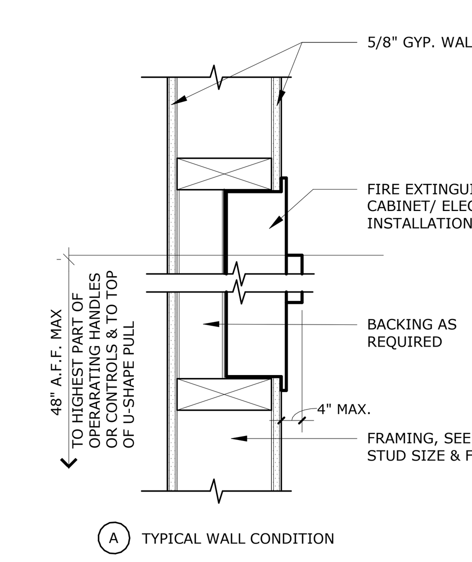

NOTE : PROVIDE FULLY RECESSED FIRE EXTINGUISHER CABINET WHERE WALL THK. PERMITTED

RECESSED FIRE EXTINGUISHER | SCALE: 1 1/2" = 1'-0" | REF.: / | 2

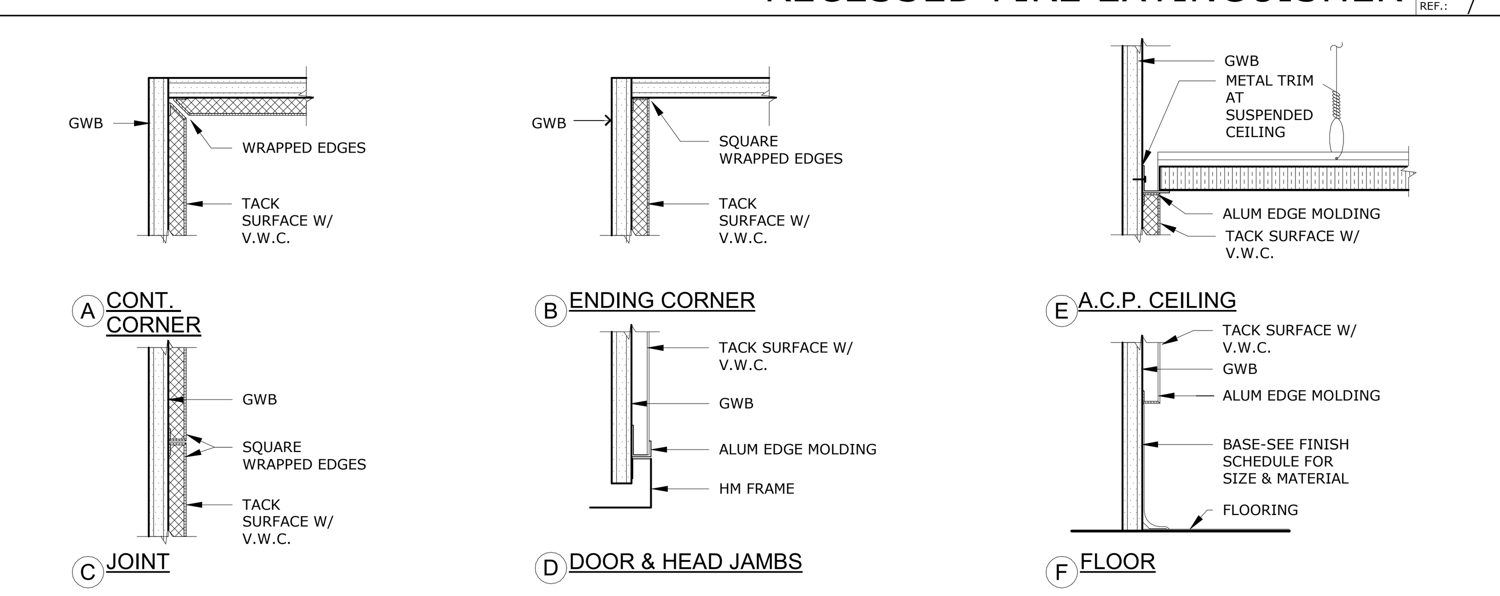

PLAN DETAILS A THRU D

SECTION DETAILS E THRU F

TACK SURFACE DETAIL | SCALE: 1/4" = 1'-0" | REF.: / | 1

GHS KITCHEN & WEIGHTROOM: 06/13/2022 DSA SUBMITTAL

PROJECT No. :1-30-55
6/21/2022 3:16:36 PM

DRAWN BY: CHECKED BY:
ISSUE No.______ DATE________ DESCRIPTION______ REVISION No.______ DATE________ DESCRIPTION______
ISSUE No.______ DATE________ DESCRIPTION______ REVISION No.______ DATE________ DESCRIPTION______
ISSUE No.______ DATE________ DESCRIPTION______ REVISION No.______ DATE________ DESCRIPTION______
ISSUE No.______ DATE________ DESCRIPTION______ REVISION No.______ DATE________ DESCRIPTION______

RUHNAUCLARKE.COM
3775 TENTH STREET, RIVERSIDE CALIFORNIA 92501 (951) 684 4664 / 5751 PALMER WAY, SUITE C, CARLSBAD CALIFORNIA 92010 (760) 438 5899

GHS KITCHEN & WEIGHTROOM
GROSSMONT HIGH SCHOOL
1100 MURRAY DR, EL CAJON, CA 92020
GROSSMONT UNION HIGH SCHOOL

MISCELLANEOUS DETAILS

AD-8.0

1-30-55

ROOM FINISH SCHEDULE - BLDG 400

ROOM NO.	ROOM NAME	FLOOR		BASE		ELEVATION 1			ELEVATION 2			ELEVATION 3			ELEVATION 4			CEILING			REMARKS	ROOM NO.
		MATERIAL	COLOR	MATERIAL	COLOR	MATERIAL	FINISH	COLOR	MATERIAL	FINISH	COLOR	MATERIAL	FINISH	COLOR	MATERIAL	FINISH	COLOR	MATERIAL	FINISH	COLOR		
401	SERVICE LINES	EPOXY	EPOXY-1	EPOXY	EPOXY-1	T	FF	T-6	GWB/ GF	PSG/ FF	P-1/ GF-1	T	FF	T-3	GWB/ GF	PSG/ FF	P-1/ GF-1	ACT	FF	ACT-2		401
402	KITCHEN	T	T-7	T	T-7	FRP	FF	FRP-1	FRP	FF	FRP-1	FRP	FF	FRP-1	FRP	FF	FRP-1	ACT	FF	ACT-2		402
403	DRY STORAGE	T	T-7	T	T-7	FRP	FF	FRP-1	FRP	FF	FRP-1	FRP	FF	FRP-1	FRP	FF	FRP-1	GWB	PSG	P-1		403
404	WALK-IN COOLER	T	T-7	T	T-7	PER MFR	FF	-	PER MFR	FF	-	PER MFR	FF	-	PER MFR	FF	-	PER MFR	FF	-	SEE FOOD SERVICE DWGS FOR ADDTL INFO	404
405	WALK-IN FREEZER	T	T-7	T	T-7	PER MFR	FF	-	PER MFR	FF	-	PER MFR	FF	-	PER MFR	FF	-	PER MFR	FF	-	SEE FOOD SERVICE DWGS FOR ADDTL INFO	405
406	CUST.	T	T-7	T	T-7	GWB	PSG	P-1	GWB/ FRP	PSG/ FF	P-1/ FRP-1	GWB/ FRP	PSG/ FF	P-1/ FRP-1	GWB	PSG	P-1	UOS	PSG	P-5	FRP @ MOP SINK PER DETAIL 4/AD-8.0	406
407	UNISEX	T	T-1	T	T-1	T/ GWWB	FF/ PSG	T-2,3,4,5/ P-1	T/ GWWB	FF/ PSG	T-2,3,4,5/ P-1	T/ GWWB	FF/ PSG	T-2,3,4,5/ P-1	T/ GWWB	FF/ PSG	T-2,3,4,5/ P-1	GWWB	PSG	P-3	REFER TO ID-1.0 FOR TILE PATTERN(S)	407
408	DATA	CONC	CONC-1	RB	RB-1	GWB	PSG	P-1	GWB	PSG	P-1	GWB	PSG	P-1	GWB	PSG	P-1	UOS	PF	P-5		408
409	ELEC.	CONC	CONC-1	RB	RB-1	GWB	PSG	P-1	GWB	PSG	P-1	GWB	PSG	P-1	GWB	PSG	P-1	UOS	PF	P-5		409
410	OFFICE	T	T-7	T	T-7	GWB	PSG	P-1	GWB	PSG	P-1	GWB	PSG	P-1	GWB	PSG	P-1	ACT	FF	ACT-2		410

ROOM FINISH SCHEDULE - BLDG 900

ROOM NO.	ROOM NAME	FLOOR		BASE		ELEVATION 1			ELEVATION 2			ELEVATION 3			ELEVATION 4			CEILING			REMARKS	ROOM NO.
		MATERIAL	COLOR	MATERIAL	COLOR	MATERIAL	FINISH	COLOR	MATERIAL	FINISH	COLOR	MATERIAL	FINISH	COLOR	MATERIAL	FINISH	COLOR	MATERIAL	FINISH	COLOR		
901	SPORTS MEDICINE	CONC	CONC-1	RB	RB-1	GWB/ TWP	PSG/ FF	P-1/ TWP-2	GWB	PSG	P-2	GWB/ TWP	PSG/ FF	P-1/ TWP-1	GWB	PSG	P-2	ACT	FF	ACT-1		901
902	P.E. ATTENDANT/ STORAGE	CONC	CONC-1	RB	RB-1	GWB	PSG	P-1,5	GWB	PSG	P-2,5	GWB	PSG	P-1,5	GWB	PSG	P-2,5	UOS	PSG	P-5		902
903	ELEC	CONC	CONC-1	RB	RB-1	GWB	PSG	P-1	GWB	PSG	P-1	GWB	PSG	P-1	GWB	PSG	P-1	UOS	PF	P-5		903
904	BOYS R.R.	T	T-1	T	T-1	T/ GWWB	FF/ PSG	T-2,3,4,5/ P-1	T/ GWWB	FF/ PSG	T-2,3,4,5/ P-1	T/ GWWB	FF/ PSG	T-2,3,4,5/ P-1	T/ GWWB	FF/ PSG	T-2,3,4,5/ P-1	GWWB	PSG	P-3	REFER TO ID-1.0 FOR TILE PATTERN(S)	904
905	GIRLS R.R.	T	T-1	T	T-1	T/ GWWB	FF/ PSG	T-2,3,4,5/ P-1	T/ GWWB	FF/ PSG	T-2,3,4,5/ P-1	T/ GWWB	FF/ PSG	T-2,3,4,5/ P-1	T/ GWWB	FF/ PSG	T-2,3,4,5/ P-1	GWWB	PSG	P-3	REFER TO ID-1.0 FOR TILE PATTERN(S)	905
906	DATA	CONC	CONC-1	RB	RB-1	GWB	PSG	P-1	GWB	PSG	P-1	GWB	PSG	P-1	GWB	PSG	P-1	UOS	PF	P-5		906
907	WEIGHT ROOM	RF	RF-1,2,3,4	RB/ T	RB-1/ T-1	GWB/ T	PSG/ FF	P-1,4/ T-3	GWB/ GF	PSG/ FF	P-5/ GF-2	GWB	PSG	P-1,5	GWB	PSG	P-1,2,5	GWB/ UOS	PES/ PF	P-4/ P-5	ALL EXPOSED MECH/ STRUCT TO BE PAINTED P-5; REF INT ELEVATIONS FOR ALUMINUM DIAMOND TREAD PANELING	907
908	REFLECTION/ DETENTION ROOM	LVT/ CPT	LVT-2/ CPT-1	RB	RB-1	GWB	PSG	P-1	GWB/ TWP	PSG/ FF	P-1/ TWP-2	GWB	PSG	P-1	GWB/ TWP	PSG/ FF	P-1/ TWP-2	ACT	FF	ACT-1		908
909	COACHES OFFICE	RF	RF-3	RB	RB-1	GWB/ TWP	PSG/ FF	P-1/ TWP-1	GWB/ TWP	PSG/ FF	P-1/ TWP-2	GWB	PSG	P-4	GWB	PSG	P-1	ACT	FF	ACT-1		909
910	PUBLICATIONS	LVT/ CPT	LVT-2/ CTP-1	RB	RB-1	GWB	PSG	P-2	GWB	PSG	P-1	GWB	PSG	P-1	GWB	PSG	P-1	ACT	FF	ACT-1		910
911	UNISEX R.R.	T	T-1	T	T-1	T/ GWWB	FF/ PSG	T-2,3,4,5/ P-1	T/ GWWB	FF/ PSG	T-2,3,4,5/ P-1	T/ GWWB	FF/ PSG	T-2,3,4,5/ P-1	T/ GWWB	FF/ PSG	T-2,3,4,5/ P-1	GWWB	PSG	P-3	REFER TO ID-1.0 FOR TILE PATTERN(S)	911
912	CUSTODIAL	CONC	CONC-1	RB	RB-1	GWB	PSG	P-1	GWB	PSG	P-1	GWB/ FRP	PSG/ FF	P-1/ FRP-1	GWB/ FRP	PSG/ FF	P-1/ FRP-1	UOS	PSG	P-5	FRP @ MOP SINK PER DETAIL 4/AD-8.0	912
913	STORAGE	LVT	LVT-1	RB	RB-1	GWB	PSG	P-1	GWB	PSG	P-1	GWB	PSG	P-1	GWB	PSG	P-1	GWB	PES	P-1		913
914	CLASSROOM	LVT/ CPT	LVT-1/ CPT-1	RB	RB-1	GWB	PES	P-1	GWB	PES	P-1	GWB	PES	P-1	GWB	PES	P-1	GWB/ ACT	PES/ FF	P-1/ ACT-3		914

COLORS, MATERIALS AND FINISHES LEGEND

Heading	ITEM	MATERIAL	LOCATION
03 35 11 - CONCRETE FLOOR FINISHES			
03 35 11 - CONCRETE FLOOR FINISHES	**CONC-1**	SEALED NATURAL CONCRETE	STORAGE/ CUSTODIAN/ SPORTS MEDICINE
04 05 11 - MASONRY MORTARING AND GROUTING			
04 05 11 - MASONRY MORTARING AND GROUTING	**M-1**	ORCO, MORTAR/GROUT, "GRANITE"	TYPICAL
04 20 00 - UNIT MASONRY			
04 20 00 - UNIT MASONRY	**CMU-1**	STACK BOND W/ MATCHING CMU CAP, "GRAY SLUMP" SHOT BLAST	TRASH ENCLOSURE
06 41 00 - ARCHITECTURAL WOOD CASEWORK			
06 41 00 - ARCHITECTURAL WOOD CASEWORK	**PL-1**	WILSONART, STANDARD HPL FINISH, MATTE FINISH, "CEMENT D503"	TYPICAL @ CASEWORK
06 41 00 - ARCHITECTURAL WOOD CASEWORK	**PL-2**	WILSONART, WRITABLE SURFACE LAMINATE/MARKERBOARD, "DESIGNER WHITE" D354	TYPICAL @ TALL CASEWORK
06 83 16 - FIBERGLASS REINFORCED PANELING			
06 83 16 - FIBERGLASS REINFORCED PANELING	**FRP-1**	PANOLAM, CLASS A, SMOOTH, CLASSIC COLOR "WHITE"	CUSTODIAL/ FOOD SERVICE
07 42 13.10 - PERFORATED METAL WALL PANELS			
07 42 13.10 - PERFORATED METAL WALL PANELS	**MWP-1**	MCNICHOLS, PERFORATED METAL - ROUND #1701921241, ALUMINUM, 8 GAUGE, 1" ROUND ON 1-1/4" STAGERRED CENTERS, 58% OPEN AREA W/ PAINTED CUSTOM GRAPHIC PER ELEVATIONS, ARTWORK TO BE PROVIDED BY ARCHITECT	ELECTRICAL YARD ENCLOSURE
07 42 13.23 - METAL COMPOSITE MATERIAL WALL PANELS			
07 42 13.23 - METAL COMPOSITE MATERIAL WALL PANELS	**MCP-1**	CITADEL, ENVELOPE RESERVE (RV), SERIES "F" KYNAR 500 FINISH, "CHARCOAL GREY"	ACCENT @ EXTERIOR
07 42 13.23 - METAL COMPOSITE MATERIAL WALL PANELS	**MCP-2**	CHALLENGER SHEET METAL, METAL SALES, "ASH GRAY" (25)	FASCIA/ SOFFIT
07 62 00 - SHEET METAL FLASHING AND TRIM			
07 62 00 - SHEET METAL FLASHING AND TRIM	**SM-1**	CHALLENGER SHEET METAL, METAL SALES, "SLATE GREY" (W38)	COPING CAP
08 33 13 - COILING COUNTER DOORS			
08 33 13 - COILING COUNTER DOORS	**STL-2**	OVERHEAD DOOR, ROLLING COUNTER DOOR, MODEL 610, FINISH "BROWN"	P.E. ATTENDANT/ STORAGE
08 33 23 - OVERHEAD COILING DOORS			
08 33 23 - OVERHEAD COILING DOORS	**STL-1**	OVERHEAD DOOR, MODEL 610, RAL COLOR #9004 "SIGNAL BLACK", SATIN FINISH	WEIGHT ROOM
08 36 13 - SECTIONAL DOORS			
08 36 13 - SECTIONAL DOORS	**ALUM-2**	OVERHEAD DOOR, MODEL 511, RAL COLOR #9004 "SIGNAL BLACK", SATIN FINISH	WEIGHT ROOM
08 43 13 - ALUMINUM-FRAMED STOREFRONTS			
08 43 13 - ALUMINUM-FRAMED STOREFRONTS	**ALUM-1**	ARCADIA, ANODIZED, "BLACK MATTE"	TYPICAL
08 80 00 - GLAZING (ARCHITECTURAL DECORATIVE WINDOW FILMS)			
08 80 00 - GLAZING (ARCHITECTURAL DECORATIVE WINDOW FILMS)	**GF-1**	3M FASARA, GLASS FINISHES FROST, MATTE SH2MLCRX 1270, MILKY CRYSTAL	BLDG 400- SERVICE LINE STOREFRONTS
09 24 00 - CEMENT PLASTERING			
09 24 00 - CEMENT PLASTERING	**CPL-1**	OMEGA, TEXTURE TBD, INTEGRAL COLOR TO MATCH DUNN EDWARDS, "COOL DECEMBER" DEW383	TYPICAL @ EXTERIOR/ SOFFITS
09 24 00 - CEMENT PLASTERING	**CPL-2**	OMEGA, TEXTURE TBD, INTEGRAL COLOR TO MATCH DUNN EDWARDS, "EQUINOX" DET616	ACCENT @ EXTERIOR
09 24 00 - CEMENT PLASTERING	**CPL-3**	OMEGA, TEXTURE TBD, INTEGRAL COLOR TO MATCH DUNN EDWARDS, "SALT BOX BLUE" DET562	ACCENT @ EXTERIOR
09 24 00 - CEMENT PLASTERING	**CPL-4**	OMEGA, TEXTURE TBD, INTEGRAL COLOR TO MATCH DUNN EDWARDS, "CRASHING WAVES" DES810	ACCENT @ EXTERIOR
09 24 00 - CEMENT PLASTERING	**CPL-5**	OMEGA, TEXTURE TBD, INTEGRAL COLOR TO MATCH DUNN EDWARDS, "SUMMER NIGHT" DES811	ACCENT @ EXTERIOR
09 24 00 - CEMENT PLASTERING	**CPL-6**	OMEGA, TEXTURE TBD, INTEGRAL COLOR TO MATCH DUNN EDWARDS, "SURFS UP" DET583	ACCENT @ EXTERIOR
09 30 00 - TILING			
09 30 00 - TILING	**T-1**	DAL-TILE, PORTFOLIO, DOVE GREY PF04, 12" X 24" CUT DOWN TO 12" X 12" W/ COVE BASE #P36C9, 6" X 12", 3/8" THICKNESS	FLOOR TILE/ COVE BASE @ RESTROOMS/ WEIGHT ROOM DRINKING FOUNTAIN
09 30 00 - TILING	**T-2**	DAL-TILE, COLOR WAVE, "LEMON POPSICLE" #CW34, 3" X 6", 5/16" THICKNESS	WALL TILE ACCENT @ RESTROOMS
09 30 00 - TILING	**T-3**	DAL-TILE, COLOR WAVE, "FEATHER WHITE" #CW02, 3" X 6", 5/16" THICKNESS (STACKED INSTALLATION AT SERVICE LINES/ DRINKING FOUNTAIN)	WALL TILE ACCENT @ RESTROOMS/ SERVICE LINES/ / WEIGHT ROOM DRINKING FOUNTAIN
09 30 00 - TILING	**T-4**	DAL-TILE, COLOR WAVE, "TWILIGHT BLUE" #CW14, 3" X 6", 5/16" THICKNESS	WALL TILE ACCENT @ RESTROOMS
09 30 00 - TILING	**T-5**	DAL-TILE, COLOR WHEEL CLASSIC, "ARCTIC WHITE" #0190, 3" X 6", GLOSS FINISH, 5/16" THICKNESS, STAGGERED INSTALLATION (STACKED INSTALLATION AT CAN WASH)	WALL TILE TYPICAL @ RESTROOMS/ EXTERIOR CAN WASH
09 30 00 - TILING	**T-6**	TILEBAR, HEXART, POP AZUL, 8" HEXAGON MATTE PORCELAIN TILE, INSTALLED RANDOMLY	WALL TILE ACCENT @ SERVICE LINES
09 30 00 - TILING	**T-7**	DAL-TILE, QUARRY TEXTURES, "ASHEN GRAY" #0T03, 6" X 6" W/ COVE BASE #Q3565 5" X 6", 1/2" THICKNESS	FLOOR TILE/ COVE BASE @ FOOD SERVICE
09 30 00 - TILING (GROUT)			
09 30 00 - TILING (GROUT)	**G-1**	CUSTOM BUILDING PRODUCTS, COLOR "WARM GRAY"	GROUT @ RESTROOM/ FOOD SERVICE FLOOR TILE
09 30 00 - TILING (GROUT)	**G-2**	CUSTOM BUILDING PRODUCTS, COLOR "SNOW WHITE "	GROUT @ WALL TILE

Heading	ITEM	MATERIAL	LOCATION
09 51 00 - ACOUSTICAL CEILINGS			
09 51 00 - ACOUSTICAL CEILINGS	**ACT-1**	ARMSTRONG, SCHOOL ZONE FINE FISSURED, SQUARE LAY-IN #1729-WH, WHITE, 24"x48"x5/8" WITH 15/16" PRELUDE SUSPENSION SYSTEM, NRC: 0.70	TYPICAL
09 51 00 - ACOUSTICAL CEILINGS	**ACT-2**	ARMSTRONG, KITCHEN ZONE, SQUARE LAY-IN #673-WH, WHITE, 24"x48"x5/8" WITH 15/16" PRELUDE SUSPENSION SYSTEM, NRC: 0.70	BLDG 400 FOOD SERVICE
09 51 00 - ACOUSTICAL CEILINGS	**ACT-3**	ARMSTRONG, OPTIMA, SQUARE LAY-IN #3160-WH, WHITE, 48"x48"x1" WITH 15/16" PRELUDE SUSPENSION SYSTEM, NRC: 0.95	BLDG 900 CLASSROOM
09 65 00 - RESILIENT FLOORING			
09 65 00 - RESILIENT FLOORING	**LVT-1**	ARMSTRONG, BIOME, ALTITUDE, "LOCH NESS", 9" X 48", 2.5 MM THICKNESS	CLASSROOM/ STORAGE
09 65 00 - RESILIENT FLOORING	**LVT-2**	ARMSTRONG, NATURAL CREATIONS WITH DIAMOND 10 TECHNOLOGY, MATIZ, "BLUE LEMONADE", 6" x 36", 3.2 MM THICKNESS	PUBLICATIONS/ REFLECTION/ DETENTION ROOM
09 65 00 - RESILIENT FLOORING (RUBBER BASE)			
09 65 00 - RESILIENT FLOORING (RUBBER BASE)	**RB-1**	JOHNSONITE, RUBBER BASE, 700 SERIES, "GREY", 4"H	TYPICAL
09 65 66 - RESILIENT ATHLETIC FLOORING			
09 65 66 - RESILIENT ATHLETIC FLOORING	**RF-1**	MONDO, SPORT IMPACT 10MM, 'MEDIUM GREY', 36" X 36"	TYPICAL @ WEIGHT ROOM
09 65 66 - RESILIENT ATHLETIC FLOORING	**RF-2**	MONDO, SPORT IMPACT 10MM, 'DARK GREY', 36" X 36"	ACCENT @ WEIGHT ROOM
09 65 66 - RESILIENT ATHLETIC FLOORING	**RF-3**	MONDO, SPORT IMPACT 10MM, 'BLUE', 36" X 36"	ACCENT @ WEIGHT ROOM/ COACHES OFFICE
09 65 66 - RESILIENT ATHLETIC FLOORING	**RF-4**	MONDO, SPORT IMPACT 10MM, 'GOLD', 36" X 36"	ACCENT @ WEIGHT ROOM
09 67 00 - FLUID-APPLIED FLOORING			
09 67 00 - FLUID-APPLIED FLOORING	**EPOXY-1**	STONHARD, STONECLAD UT, COLOR "4008 (LIGHT GREY) W/ 6" INTEGRAL COVE BASE	TYPICAL @ SERVICE LINES
09 72 16 - ARCHITECTURAL VINYL GRAPHIC FILMS			
09 72 16 - ARCHITECTURAL VINYL GRAPHIC FILMS	**GF-2**	3M, CONTROLTAC PRINT FILM 40C-10R (GLOSS)	ACCENT @ WEIGHT ROOM
09 91 23 - INTERIOR PAINTING			
09 91 23 - INTERIOR PAINTING	**P-1**	DUNN EDWARDS, "COOL DECEMBER" DEW383	TYPICAL
09 91 23 - INTERIOR PAINTING	**P-2**	DUNN EDWARDS, "SURFS UP" DET583	ACCENT/ CONTRASTING STAIR GROOVES
09 91 23 - INTERIOR PAINTING	**P-3**	DUNN EDWARDS, "BONNIE BLUE" DES807	GYP CEILING @ RESTROOMS
09 91 23 - INTERIOR PAINTING	**P-4**	DUNN EDWARDS, "MELTED BUTTER", DES313	ACCENT
09 91 23 - INTERIOR PAINTING	**P-5**	DUNN EDWARDS, "BLACK" DEA002 RL#476	UOS/ EXPOSED MECH & STRUCT
09 96 00 - HIGH-PERFORMANCE COATINGS			
09 96 00 - HIGH-PERFORMANCE COATINGS	**P-6**	TNEMEC, CUSTOM COLOR TO MATCH DUNN EDWARDS DET616 "EQUINOX"	HM DOORS/ FRAMES/ EXTERIOR BLDG SIGNAGE/ COUNTER SUPPORT BRACKET
10 11 00 - VISUAL DISPLAY UNITS (TACKABLE WALL PANELS)			
10 11 00 - VISUAL DISPLAY UNITS (TACKABLE WALL PANELS)	**TWP-1**	KOROSEAL, DESERT SAND, "SUNBURST" 5922-08	ACCENT
10 11 00 - VISUAL DISPLAY UNITS (TACKABLE WALL PANELS)	**TWP-2**	FORBO, BULLETIN BOARD, "OYSTER SHELL" 2206	TYPICAL
10 14 00 - SIGNAGE			
10 14 00 - SIGNAGE	**SIGN-1**	DUNN EDWARDS, TO MATCH DUNN EDWARDS "SUMMER NIGHT" DES811	BACKGROUND
10 14 00 - SIGNAGE	**SIGN-2**	DUNN EDWARDS, TO MATCH DUNN EDWARDS "IGLOO" DEW379	TEXT/ SYMBOLS
10 21 13.19 - PLASTIC TOILET COMPARTMENTS			
10 21 13.19 - PLASTIC TOILET COMPARTMENTS	**TP-1**	SCRANTON, HINY HIDERS, "GREY", OP TEXTURE	TYPICAL @ RESTROOMS
10 26 00 - WALL AND DOOR PROTECTION			
10 26 00 - WALL AND DOOR PROTECTION	**WP-1**	KOROSEAL, KOROGARD CORNER GUARD #GS10, STAINLESS STEEL TYPE 304 WITH #4 SATIN FINISH, ADHESIVE MOUNTED (NO TAPE OR SCREWS), 1" LEG	WHERE NOTED IN PLANS
10 51 13 - METAL LOCKERS			
10 51 13 - METAL LOCKERS	**LK-1**	SALSBURY INDUSTRIES, STANDARD METAL LOCKERS, DOUBLE TIER, "BLUE"	KITCHEN
12 24 00 - WINDOW SHADES			
12 24 00 - WINDOW SHADES	**RS-1**	MECHOSHADE, THERMOVEIL #1300 SERIES, %5 OPEN, "GRAY"	TYPICAL
12 36 00 - COUNTERTOPS			
12 36 00 - COUNTERTOPS	**PL-3**	WILSONART, STANDARD HPL FINISH, MATTE FINISH, "PLATINUM D315"	TYPICAL @ COUNTERTOPS
12 48 13 - ENTRANCE FLOOR MATS AND FRAMES			
12 48 13 - ENTRANCE FLOOR MATS AND FRAMES	**CPT-1**	CONSTRUCTION SPECIALTIES, DESIGNSTEP BR-DURATION, COCO CARPET NATURAL COLORS, 'MEDIUM GRAY'	WALK-OFF MAT
32 13 13 - SITE CONCRETE			
32 13 13 - SITE CONCRETE	**CONC-2**	NATURAL CONCRETE, TEXTURE FINISH PER PLANS	SITE CONCRETE - TYPICAL
32 13 13 - SITE CONCRETE	**CONC-3**	SIKA/SCOFIELD, SIKACOLOR-100P "PEWTER", W/ SIKASTAMP PATTERN 'JUMBO BRICK RUNNING BOND'	SITE CONCRETE - ACCENT
32 13 13 - SITE CONCRETE	**CONC-4**	SIKA/SCOFIELD, SIKACOLOR-430 ELEMENTS WATER-BASED STAIN, "BLUE" #ELE125	SCHOOL LOGO PAVING - TYPICAL
32 13 13 - SITE CONCRETE	**CONC-5**	SIKA/SCOFIELD, SIKACOLOR-430 ELEMENTS WATER-BASED STAIN, "YELLOW" #ELE123	SCHOOL LOGO PAVING - ACCENT

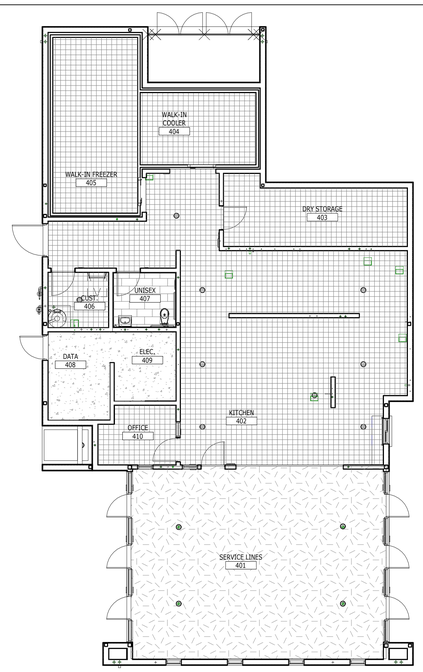

BLDG 400 FINISHES PLAN — SCALE: 1/8" = 1'-0" — REF.: 1/A1-4.0 — 1

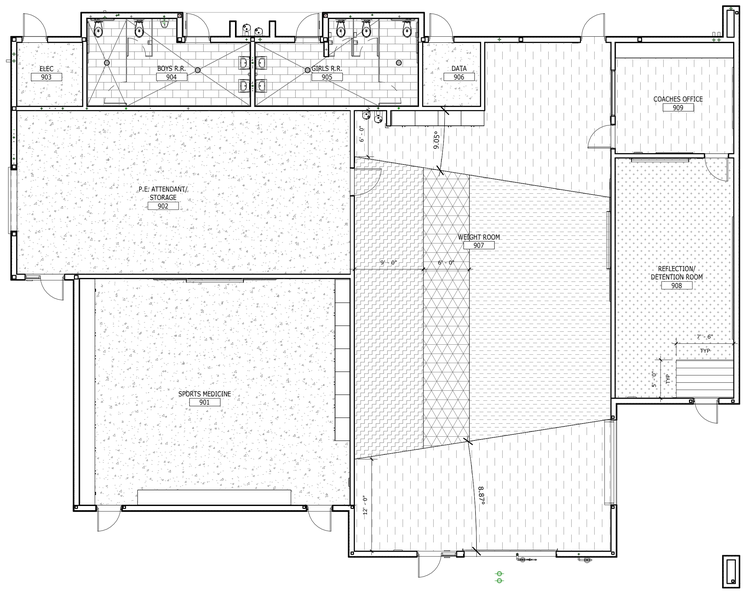

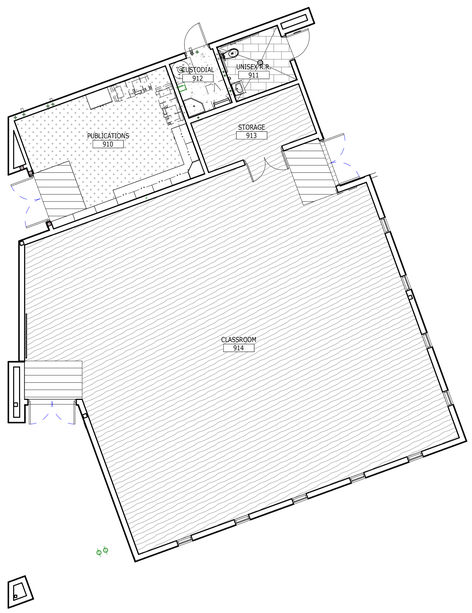

BUILDING 900 FINISHES PLAN — SCALE: 1/8" = 1'-0" — REF.: 1/A1-4.0 — 2

STAMPS

CONSULTANT BRANDING

RUHNAU CLARKE ARCHITECTS

IDENTIFICATION STAMP
DIV. OF THE STATE ARCHITECT
APP: 04-120895 INC:
REVIEWED FOR
SS ☑ FLS ☑ ACS ☑
DATE: 06/27/2022

FINISH NOTES

1. ALL FINISHES SHALL COMPLY WITH CBC CHAPTERS 3, 8 & 10, CFC AND CCR TITLE 19 AND STATE OF CALIFORNIA TECHNICAL BULLETIN 117-2013
2. WALL AND CEILING MATERIALS SHALL NOT EXCEED THE FLAME SPREAD CLASSIFICATIONS IN CBC TABLE 803.9
3. ALL ADJACENT DISSIMILAR FINISH MATERIALS TO RECEIVE BEAD OF CAULK, U.N.O.
4. SEE INTERIOR ELEVATION SHEETS FOR ACCENT PAINT LOCATIONS
5. ALL EXPOSED STEEL, HOLLOW METAL DOORS AND FRAMES, AND LOUVERS TO BE PAINTED
6. TOILET ROOM, TOILET ROOM VESTIBULES, AND FOOD SERVICE AREA WALLS AND CEILINGS NOT COVERED BY EITHER TILE OR F.R.P. TO HAVE MOISTURE RESISTANT GYP. BD., U.N.O.
7. COORDINATE FINISHES WITH MECHANICAL FOR PLUMBING FIXTURES
8. FOR EXTENT AND PATTERN OF CEILING FINISH, SEE REFLECTED CEILING PLAN
9. AT COVE BASE, PROVIDE CONT. 3/8" RADIUS
10. FOR TYPICAL CERAMIC TILE DETAILS, REFER TO DETAIL 3/AD-8.0
11. FOR TYPICAL FLOOR TRANSITION DETAILS, REFER TO DETAIL 26/AD-6.0
12. FOR MORE INFO. ON COLORS, FINISHES & MATERIALS, REFER TO SHEET -/ID-1.0
13. ALL FLOOR FINISHES SHALL BE STABLE, FIRM & SLIP RESISTANT PER CBC SECTION 11B-302.1
14. CARPET/ CARPET TILE FLOORING SHALL BE SECURELY ATTACHED WITH FIRM BACKING AND PILE HEIGHT OF 1/2" MAX. PER CBC SECTION 11B-302.2. CARPET EDGES SHALL COMPLY WITH CBC SECTION 11B-303
15. ALL FLOOR FINISHES SHALL EXTEND BELOW ACCESSIBLE WORKSTATIONS, SINKS, ETC. FOR THE REQUIRED TOE/KNEE CLEARANCE
16. EPOXY FLOORING AT FOOD SERVICE AREAS IS GREASE/ ACID RESISTANT AND USDA APPROVED
17. REFER TO CORRESPONDING SPECIFICATIONS FOR BURNING CHARACTERISTICS AND TESTING REQ

FINISH ABBREVIATIONS

ACP	ACOUSTICAL CEILING PANEL (SUSPENDED)	PES	PAINT, EGGSHELL
ACT	ACOUSTICAL CEILING TILE	PL	PLASTIC LAMINATE
AWP	ACOUSTIC WALL PANEL	PF	PAINT, FLAT
		PSG	PAINT, SEMI-GLOSS
CGD	CORNER GUARD	RB	RUBBER BASE
CMU	CONCRETE MASONRY UNIT	RES	RESINOUS/EPOXY FLOORING
CONC	CONCRETE	RF	RUBBER FLOORING
CPL	CEMENT PLASTER	RS	ROLLER SHADE SYSTEM
CPT	CARPET		
		S	SEAL
DIS	DISPLAY CASE	SCW	SOLID CORE WOOD
		SEAL	SEALED CONCRETE
(E)	EXISTING	SSM	SOLID SURFACE MATERIAL
ECO	ECORESIN PANEL	ST	STAIN WOOD COLOR
EPOXY	EPOXY FLOOR	STV	STONE TILE VENEER
EPT	EPOXY TERRAZZO	SV	SHEET VINYL
EXP	EXPOSED		
		T	TILE
FF	FACTORY FINISH	TWP	TACKABLE WALL PANEL
FRP	FIBERGLASS REINFORCED PANEL		
		U.O.S.	UNDERSIDE OF STRUCTURE
G	GROUT		
GWB	GYPSUM WALLBOARD	VCT	VINYL COMPOSITION TILE
GWWB	WATER RESISTANT GWB	VF	VINYL FABRIC
		VWC	VINYL WALL COVERING
LINO	LINOLEUM		
LVT	LUXURY VINYL TILE	WD	WOOD
		WS	WALL SYSTEM
MESH	METAL MESH SYSTEM		
MCP	METAL COMPOSITE PANEL		
MPS	METAL PANEL SYSTEM		

FLOOR FINISH LEGEND

LUXURY VINYL FLOORING: LVT-1, LVT-2

CONCRETE FLOORING: CONC-1

RUBBER FLOORING: RF-1, RF-2, RF-3, RF-4

EPOXY FLOORING: EPOXY-1

TILING: T-1, T-7

CORNER GUARDS: WP-1

PER SPEC SECTION 10 26 00

CARPETING: CPT-1

NOTE: REFER TO COLORS, MATERIALS AND FINISHES LEGEND FOR ADDITIONAL INFORMATION -/ID-1.0

RESTROOM WALL TILE PATTERNS

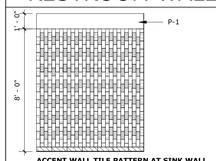

ACCENT WALL TILE PATTERN AT SINK WALL

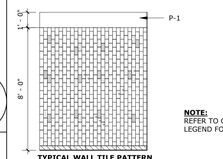

TYPICAL WALL TILE PATTERN

T-1, T-2, T-3, T-4, T-5

NOTE: REFER TO COLORS, MATERIALS AND FINISHES LEGEND FOR ADDITIONAL INFORMATION -/ID-1.0

GHS KITCHEN & WEIGHTROOM: 06/13/2022 DSA SUBMITTAL

PROJECT No. :1-30-55
6/21/2022 3:17:27 PM

DRAWN BY: CHECKED BY:

ISSUE No.	DATE	DESCRIPTION	REVISION No.	DATE	DESCRIPTION
ISSUE No.	DATE	DESCRIPTION	REVISION No.	DATE	DESCRIPTION
ISSUE No.	DATE	DESCRIPTION	REVISION No.	DATE	DESCRIPTION
ISSUE No.	DATE	DESCRIPTION	REVISION No.	DATE	DESCRIPTION

RUHNAUCLARKE.COM
3775 TENTH STREET, RIVERSIDE CALIFORNIA 92501 (951) 684 4664 / 5751 PALMER WAY, SUITE C, CARLSBAD CALIFORNIA 92010 (760) 438 5899

GHS KITCHEN & WEIGHTROOM
GROSSMONT HIGH SCHOOL
1100 MURRAY DR, EL CAJON, CA 92020
GROSSMONT UNION HIGH SCHOOL

FINISHES PLAN / SCHED & CMF LEGEND

ID-1.0

1-30-55

LIST OF ABBREVIATIONS

ADD'L.	ADDITIONAL
ALT.	ALTERNATE
ACI	AMERICAN CONCRETE INSTITUTE
APA	AMERICAN PLYWOOD ASSOCIATION
ASTM	AMERICAN SOCIETY FOR TESTING AND MATERIALS
AWS	AMERICAN WELDING SOCIETY
A.B.	ANCHOR BOLT(S)
APPROX.	APPROXIMATELY
ARCH.	ARCHITECT / ARCHITECTURAL
@	AT
B. PL.	BASE PLATE
BM.	BEAM
BRG.	BEARING
BTWN.	BETWEEN
BLK.	BLOCK
BLKG.	BLOCKING
B.E.	BOTH ENDS
BOT. OR BOTT.	BOTTOM
B.N.	BOUNDARY NAILS
BLDG.	BUILDING
C	CAMBER
CBC	CALIFORNIA BUILDING CODE
CIP	CAST IN PLACE
CLG.	CEILING
CJ	CEILING JOIST OR CONSTRUCTION JOINT OR CONTROL JOINT
CJP	COMPLETE JOINT PENETRATION WELD
℄	CENTER LINE
CLR.	CLEAR
COL.	COLUMN
CONC.	CONCRETE
CMU	CONCRETE MASONRY UNIT
COND.	CONDITION
CONN.	CONNECTION
CONSTR.	CONSTRUCTION
CONT'D	CONTINUED
CONT.	CONTINUOUS
CONTR.	CONTRACTOR
CSK.	COUNTERSINK
DL	DEAD LOAD
DP.	DEEP
DEMO.	DEMOLISH
DTL. OR DET.	DETAIL
DIAG.	DIAGONAL
DIA. OR ø	DIAMETER
DIM.	DIMENSION
DO	DITTO
DBL.	DOUBLE
D.F.	DOUGLAS FIR
DWL.	DOWEL
DN.	DOWN
DWG.	DRAWING
EA.	EACH
E.F.	EACH FACE
E.S.	EACH SIDE
E.W.	EACH WAY
E.N.	EDGE NAIL(S)
ELEC.	ELECTRICAL
ELEV.	ELEVATION
EMBED.	EMBEDMENT
ENG.	ENGINEER
EQ.	EQUAL
EQUIP.	EQUIPMENT
EXCAV.	EXCAVATION
(E)	EXISTING
EXP.	EXPANSION
EJ	EXPANSION JOINT
ES	EVALUATION SERVICE
ESR	EVALUATION SERVICE REPORT
EXT.	EXTERIOR
F.O.C.	FACE OF CONCRETE
F.O.M.	FACE OF MASONRY
F.O.S.	FACE OF STUD OR FACE OF SLAB
F.S.	FAR SIDE
FIN.	FINISH
F.F.	FINISHED FLOOR
FHWS	FLAT HEAD WOOD SCREW
FLR.	FLOOR
FD	FLOOR DRAIN
FTG.	FOOTING
FNDN.	FOUNDATION
FRMG.	FRAMING
GALV.	GALVANIZE
GA.	GAUGE
GLU-LAM	GLUED LAMINATED
GLB	GLUED LAMINATED BEAM
GR.	GRADE
HGR.	HANGER
HR	HARDROCK
HDR.	HEADER
HT.	HEIGHT
HD	HOLD DOWN
HSS	HOLLOW STRUCTURAL SECTION
HORIZ.	HORIZONTAL
INFO.	INFORMATION
I.D.	INSIDE DIAMETER
INT.	INTERIOR
IBC	INTERNATIONAL BUILDING CODE
ICC	INTERNATIONAL CODE COUNCIL
INV.	INVERT
JST.	JOIST
KP	KING POST
KSI	KIPS PER SQUARE INCH
LAM.	LAMINATED
LDGR.	LEDGER
LT. WT. OR LW	LIGHT WEIGHT
LL	LIVE LOAD
LG.	LONG OR LENGTH
LLH	LONG LEG HORIZONTAL
LLV	LONG LEG VERTICAL
LO-HY	LOW HYDROGEN
M.B.	MACHINE BOLT(S)
MFR.	MANUFACTURER
MAS.	MASONRY
M.O.	MASONRY OPENING
MATL.	MATERIAL
MAX.	MAXIMUM
MECH.	MECHANICAL
MTL.	METAL
MIN.	MINIMUM
MISC.	MISCELLANEOUS
MU	MECHANICAL UNIT
N.F.	NEAR FACE
N.S.	NEAR SIDE
NSA	NELSON STUD ANCHOR
(N)	NEW
NIC.	NOT IN CONTRACT
NTS.	NOT TO SCALE
NO. OR #	NUMBER
O.C.	ON CENTER
OPNG.	OPENING
OPP.	OPPOSITE
O.H.	OPPOSITE HAND
O.D.	OUTSIDE DIAMETER
PHWS	PAN HEAD WOOD SCREW
P.J.	PANEL JOINT
d	PENNY
PIL.	PILASTER
PL. OR ℙ	PLATE (STEEL OR WOOD)
PLY.	PLYWOOD
PWJ	PLYWOOD WEB JOIST
PCF	POUNDS PER CUBIC FOOT
PSF	POUNDS PER SQUARE FOOT
PSI	POUNDS PER SQUARE INCH
PT	PRESSURE TREATED
PTDF	PRESSURE TREATED DOUGLAS FIR
PL	PROPERTY LINE
RAD.	RADIUS
RFTR.	RAFTER
REF.	REFERENCE
REINF.	REINFORCING
REQ'D	REQUIRED
REQMT.	REQUIREMENT
RF.	ROOF
R.D.	ROOF DRAIN

LIST OF ABBREVIATIONS (CONT'D)

RO.	ROUGH
R.O.	ROUGH OPENING
SCHED.	SCHEDULE
SEC.	SECTION
SEL.	SELECT
SEP.	SEPARATION
SFRS.	STRUCTURAL FORCE RESISTING SYSTEM
SHTG.	SHEATHING
SHT.	SHEET
S.M.	SHEET METAL
SMS	SHEET METAL SCREWS
SIM.	SIMILAR
SIMP.	SIMPSON
SPCG.	SPACING
SPECS.	SPECIFICATION
SQ.	SQUARE
STGR.	STAGGER
S.S.	STAINLESS STEEL
SPC	STANDARD PIPE COLUMN
STD.	STANDARD
STL.	STEEL
STIFF.	STIFFENER
STIRR.	STIRRUP
STRUCT.	STRUCTURAL
SYM.	SYMMETRICAL
TSG	TAPERED STEEL GIRDER
THK.	THICK
K OR KIP	1,000 POUNDS
THRU	THROUGH
TN	TOE NAIL
T&G	TONGUE AND GROOVE
T&B	TOP AND BOTTOM
T.O.F.	TOP OF FOOTING
T.O.L.	TOP OF LEDGER
T.O.S.	TOP OF STEEL OR TOP OF SHEATHING
T.O.W.	TOP OF WALL
TL	TOTAL LOAD
TS	TUBE STEEL
TYP.	TYPICAL
U.N.O.	UNLESS NOTED OTHERWISE
VIF	VERIFY IN FIELD
VERT.	VERTICAL
WT.	WEIGHT
WWF	WELDED WIRE FABRIC
W/	WITH
W/O	WITHOUT
WD.	WOOD
WIJ	WOOD-I-JOIST
WP	WORK POINT
W.S.	WOOD SCREW

GENERAL

1. THESE STRUCTURAL DRAWINGS AND SPECIFICATIONS, INCLUDING ANY ADDENDA (COLLECTIVELY "THE PLANS") INCORPORATE ALL LEGAL AND INDUSTRY REQUIREMENTS AND STANDARDS INCLUDING WITHOUT LIMITATION THE FOLLOWING:
    - THE CALIFORNIA CODE OF REGULATIONS, TITLE 24, PART 1 (CALIFORNIA ADMINISTRATIVE CODE), 2019 EDITION.
    - THE CALIFORNIA CODE OF REGULATIONS, TITLE 24, PART 2 (CALIFORNIA BUILDING CODE), 2019 EDITION.
    - OTHER REGULATING AGENCIES WHICH MAY HAVE AUTHORITY OVER ANY PORTION OF THE WORK, INCLUDING THE STATE OF CALIFORNIA DIVISION OF INDUSTRIAL SAFETY, AND THOSE CODES AND STANDARDS LISTED IN THESE NOTES AND SPECIFICATIONS.
    - THE FUNCTIONALITY STANDARDS SET FORTH IN TITLE 7 OF THE CALIFORNIA CIVIL CODE (THE RIGHT TO REPAIR ACT).
    - THE MANUFACTURER'S REQUIREMENTS OR RECOMMENDATIONS FOR ANY INCORPORATED PRODUCTS.
    - THE MOST CURRENT APPROVED ISSUES OF ANY NOTED SPECIFICATIONS, CODES AND STANDARDS, INCLUDING SUPPLEMENTS, UNLESS NOTED OTHERWISE.
2. THE PLANS REPRESENT ONLY THE FINISHED STRUCTURE, AND THEY ARE NOT INTENDED TO INDICATE OR REQUIRE ANY CONSTRUCTION MEANS, METHODS, TECHNIQUES, SEQUENCES OR PROCEDURES. IN PARTICULAR AND WITHOUT LIMITATION, THE CONTRACTOR SHALL BE FULLY AND SOLELY RESPONSIBLE FOR ANY AND ALL EXCAVATION, DEMOLITION, SHORING AND ERECTION PROCEDURES AND FOR ANY AND ALL SAFETY PROGRAMS AND PRECAUTIONS.
3. IN USING THE PLANS FOR BIDDING OR CONSTRUCTION PURPOSES, THE CONTRACTOR IS REQUIRED TO REVIEW ALL OF THE PROJECT'S CONSTRUCTION DOCUMENTS AS A WHOLE IN ORDER TO IDENTIFY ALL REQUIREMENTS THAT DIRECTLY OR INDIRECTLY AFFECT ITS PORTION OF THE STRUCTURAL WORK, EVEN REQUIREMENTS LOCATED IN SECTIONS DESIGNATED AS APPLICABLE TO OTHER TRADES. IN CASE OF CONFLICTS, THE CONTRACTOR SHALL EITHER OBTAIN DIRECTION FROM AN APPROPRIATE OWNER REPRESENTATIVE OR OTHERWISE APPLY THE MORE STRINGENT REQUIREMENT.
4. IN INTERPRETING THE PLANS, THE FOLLOWING GENERAL RULES APPLY:
    - WRITTEN DIMENSIONS SHALL TAKE PRECEDENCE OVER SCALED DRAWINGS.
    - SPECIFIC NOTES AND DETAILS SHALL TAKE PRECEDENCE OVER GENERAL NOTES AND TYPICAL DETAILS.
    - WORK NOT PARTICULARLY SHOWN OR SPECIFIED SHALL BE THE SAME AS SIMILAR PARTS THAT ARE SHOWN OR SPECIFIED.
    - SCALED DIMENSIONS AND GRAPHICALLY SHOWN LOCATIONS ARE TO BE CONSIDERED ONLY APPROXIMATE.
5. IN IMPLEMENTING THE PLANS, THE FOLLOWING GENERAL RULES APPLY:
    - BECAUSE THE PLANS ARE INTENDED TO SET FORTH THE REQUIREMENTS FOR CONSTRUCTION IN ONLY AN INDUSTRY-STANDARD LEVEL OF QUALITY AND DETAIL, AND THEREFORE ARE INTENDED TO BE SUPPLEMENTED BY APPROPRIATE REQUESTS FOR CLARIFICATION AND INFORMATION, ERRORS AND OMISSIONS ARE TO BE EXPECTED AND ANTICIPATED; AND THE CONTRACTOR IS REQUIRED TO CAREFULLY REVIEW THE PLANS FOR ERRORS AND OMISSIONS AND TO BRING THESE ERRORS AND OMISSIONS TO THE ATTENTION OF AN APPROPRIATE OWNER REPRESENTATIVE IN A TIMELY MANNER AND ASSUMES THE RISK OF THE CONSEQUENCES OF FAILING TO DO SO BEFORE BIDDING OR OTHERWISE PROCEEDING.
    - THE CONTRACTOR SHALL REVIEW AND VERIFY ALL DIMENSIONS PRIOR TO STARTING CONSTRUCTION, AND NOTIFY THE ARCHITECT IMMEDIATELY OF ANY DISCREPANCIES OR INCONSISTENCIES.
6. SUBMITTALS WILL BE REVIEWED BY THE STRUCTURAL ENGINEER, IF AT ALL, ONLY PURSUANT TO THE INDUSTRY-STANDARD PROTOCOL SET FORTH IN AIA DOCUMENT A201, AND IN NO EVENT WILL THE SUBMITTAL REVIEW PROCESS RELIEVE OR LESSEN THE SUBMITTING CONTRACTOR'S RESPONSIBILITY FOR AN INAPPROPRIATE SUBMITTAL.
7. IN NO EVENT WILL ANY SITE VISITS BY THE STRUCTURAL ENGINEER CONCERN CONSTRUCTION MEANS AND METHODS OR CONSTRUCTION SAFETY, AND ALL SUCH MATTERS SHALL REMAIN THE SOLE RESPONSIBILITY OF THE CONTRACTOR.
8. COPIES OF THE PLANS PROVIDED IN ANY ELECTRONIC FORM ARE SUBJECT TO THE SAME PROVISIONS AS THE OTHER INSTRUMENTS OF SERVICE PREPARED BY OR ON BEHALF OF STRUCTURAL ENGINEER FOR THE PROJECT, INCLUDING WITHOUT LIMITATION THE ENGINEER'S COMMON LAW, STATUTORY OR OTHER RESERVED RIGHTS, INCLUDING COPYRIGHTS. A RECIPIENT IS GRANTED AT MOST A TRANSFERABLE NONEXCLUSIVE LICENSE TO REUSE THE PLANS SOLELY FOR PROJECT PURPOSES; AND NO RECIPIENT IS AUTHORIZED TO USE OR TO ALLOW THE USE OF ALL OR ANY PORTION OF THESE PLANS FOR ANY OTHER PURPOSE, AND ANY USE FOR ANY OTHER PURPOSE WOULD CONSTITUTE ACTIONABLE PLAGIARISM. STRUCTURAL ENGINEER PROVIDES DOCUMENTS IN AN ELECTRONIC FORM ONLY IN ITS STANDARD FORMATS AND CONVENTIONS AND WITH NO GUARANTEE OF COMPATIBILITY WITH ANY RECIPIENT'S SOFTWARE OR HARDWARE, AND ANY USE WITH OR CONVERSION TO OTHER FORMATS OR CONVENTIONS, OR THE USE WITH ANY PARTICULAR SOFTWARE OR HARDWARE, IS AT THE RECIPIENT'S SOLE RISK.

PROJECT DESIGN CRITERIA

1. BASIC DESIGN LIVE LOADS:

ROOF: 20 PSF (REDUCIBLE)

2. SPECIAL LOADS

PHOTOVOLTAIC PANEL SYSTEM 6 PSF (DEAD LOAD)

3. WIND LOADS

RISK CATEGORY: III
EXPOSURE CATEGORY: C
BASIC DESIGN WIND SPEED (3-SECOND GUST), V = 103 MPH
ALLOWABLE STRESS DESIGN WIND SPEED, V_{ASD} = 79 MPH
VELOCITY PRESSURE EXPOSURE COEFFICIENT, K_Z = 0.85 (0-15 FT)
Kz = 0.90 (15-20 FT)
TOPOGRAPHIC FACTOR, K_{Zt} = 1.0
WIND DIRECTIONALITY FACTOR, K_d = 0.85
GROUND ELEVATION FACTOR, Ke = 1.00
GUST EFFECT FACTOR, G = 0.85

A. MWFRS - DIRECTIONAL PROCEDURE (ASCE 7-16, CH. 27 PART 1)

$q_Z = 0.00256\ K_Z\ K_{Zt}\ K_d\ K_e\ V^2 = 20.8$ PSF

$P = qGC_P - q_i(GC_{Pi})$

EXTERNAL PRESSURE COEFFICIENT, C_P = [FIG. 27.34-1 THRU 27.34-3]
INTERNAL PRESSURE COEFFICIENT, (GC_{Pi}) = TABLE 26.13-1

B. COMPONENTS & CLADDING (ASCE 7-16, CH. 30)

$q_h = 0.00256\ K_Z\ K_{Zt}\ K_d\ K_e\ V^2 = 20.8$ PSF

$P = q_h\ [(GC_P) - (GC_{Pi})]$

EXTERNAL PRESSURE COEFFICIENT, (G_{CP}) = [FIG. 30.3-1 THRU 30.3-7]
INTERNAL PRESSURE COEFFICIENT, (GC_{Pi}) = TABLE 26.13-1

6. SOIL LATERAL LOADS

ACTIVE PRESSURE = 36 PCF (LEVEL)
55 PCF (2:1 SLOPE)

AT-REST PRESSURE = 55 PCF (LEVEL)
85 PCF (2:1 SLOPE)

7. EARTHQUAKE LOADS

SEISMIC DESIGN CRITERIA

S_S = 0.777
S_1 = 0.284
SITE CLASS: C
F_A = 1.2
F_V = 1.5
S_{DS} = 0.622
S_{D1} = 0.284
RISK CATEGORY: III
SEISMIC DESIGN CATEGORY: D
ALLOWABLE DRIFT LIMIT = 0.015 x BLDG. HT.

SEISMIC DESIGN REQUIREMENTS

DESIGN BASE SHEAR $V = C_S W$
WHERE $C_S = S_{DS}/(R/I_e)$
BUT SHALL NOT BE LESS THAN $C_S = 0.044 S_{DS} I_e > 0.01$
BUT NEED NOT EXCEED $C_S = S_{D1}/[T(R/I_e)]$

BUILDING	R	Ω_0	T	RHO (REDUNDANCY FACTOR)	I_e	C_S	V (KIPS)	PRIMARY LATERAL FORCE RESISTING SYSTEM	ANALYSIS PROCEDURE	STRUCT. IRREG.	LOC. OF BASE
400	6.5	3.0	0.189	1.3	1.25	0.12	23.6	(1)	(A)	REENTRANT CORNER	T.O.F.
900A	6.5	3.0	0.189	1.3	1.25	0.12	45.5	(1)	(A)	NONE	T.O.F.
900B	6.5	3.0	0.189	1.3	1.25	0.12	24.0	(1)	(A)	NONE	T.O.F.

(1) LIGHT-FRAMED WALLS SHEATHED WITH WOOD STRUCTURAL PANELS RATED FOR SHEAR (ASCE 7-16, TABLE 12.2-1, ITEM A.15.)

(A) EQUIVALENT LATERAL FORCE PROCEDURE

DIMENSIONS

1. DIMENSIONS SHALL BE DEFINED TO INCLUDE BOTH HORIZONTAL DIMENSIONS AND VERTICAL DIMENSIONS (ELEVATIONS).
2. WRITTEN DIMENSIONS SHALL TAKE PRECEDENCE OVER SCALED DRAWINGS.
3. SEE ARCHITECTURAL DRAWINGS FOR DIMENSIONS NOT NOTED ON STRUCTURAL DRAWINGS.
4. SEE ARCHITECTURAL AND/OR CIVIL DRAWINGS FOR FINISH FLOOR ELEVATIONS.
5. SEE ARCHITECTURAL DRAWINGS FOR ALL TOP OF SHEATHING AND/OR ROOF ELEVATIONS.
6. THE CONTRACTOR SHALL REVIEW AND VERIFY ALL DIMENSIONS PRIOR TO STARTING CONSTRUCTION. THE ARCHITECT SHALL BE NOTIFIED IMMEDIATELY OF ANY DISCREPANCIES OR INCONSISTENCIES.

SUBMITTALS

1. SUBMITTALS, INCLUDING SHOP DRAWINGS AND CONCRETE MIX DESIGNS, REQUIRED BY THE SPECIFICATIONS SHALL BE SUBMITTED TO THE ARCHITECT AND STRUCTURAL ENGINEER FOR REVIEW PRIOR TO FABRICATION OF THE ITEMS.
2. A SCHEDULE FOR SUBMITTAL OF SHOP DRAWINGS SHALL BE PREPARED BY THE GENERAL CONTRACTOR AND REVIEWED BY THE ARCHITECT AND STRUCTURAL ENGINEER PRIOR TO THE START OF FABRICATION. THE SCHEDULE SHALL PROPORTION THE QUANTITY OF SHOP DRAWINGS TO BE REVIEWED IN EACH SUBMITTAL TO ALLOW SUFFICIENT TIME, AS DEEMED REASONABLE IN THE PROFESSIONAL JUDGEMENT OF THE ARCHITECT AND STRUCTURAL ENGINEER, TO PERMIT ADEQUATE REVIEW.
3. SHOP DRAWINGS SHALL INDICATE THE DATE OR REVISION OF DRAWING(S) FROM WHICH THE DRAWINGS WERE PREPARED. SUBMITTALS THAT DO NOT IDENTIFY THE LATEST DATE OR REVISION OF DRAWING(S) WILL BE RETURNED WITHOUT REVIEW. ONLY SHOP DRAWINGS THAT ARE COMPLETE WILL BE ACCEPTED FOR REVIEW.
4. IF, AFTER REVIEW, THE SHOP DRAWINGS MUST BE REVISED AND RESUBMITTED, THE SHOP DRAWINGS SHALL IDENTIFY EACH REVISION AND/OR ADDITION BY CLOUDING OR OTHER MEANS TO ASSURE PROPER REVIEW.
5. SUBMITTALS WILL NOT BE ACCEPTED DIRECTLY FROM SUBCONTRACTORS. SUBMITTALS WILL BE ACCEPTED FROM THE GENERAL CONTRACTOR ONLY AFTER BEING REVIEWED AND SIGNED BY THE GENERAL CONTRACTOR, INDICATING COMPLIANCE WITH THE REQUIREMENTS OF THE CONSTRUCTION DOCUMENTS. SUBMITTALS NOT COMPLYING WITH THE REQUIREMENTS NOTED ABOVE OR IN THE SPECIFICATIONS WILL BE RETURNED WITHOUT REVIEW.

EXISTING UNDERGROUND UTILITIES

1. THE ARCHITECT AND ENGINEERS ARE NOT RESPONSIBLE FOR THE LOCATIONS OF EXISTING UNDERGROUND UTILITIES WHETHER OR NOT SHOWN ON THE DRAWINGS. THE LOCATION OF ANY EXISTING UNDERGROUND UTILITIES SHOWN ON THE DRAWINGS, IF ANY, IS APPROXIMATE. THE CONTRACTOR SHALL EXERCISE EXTREME CAUTION IN EXCAVATING AND TRENCHING ON THE SITE. THE CONTRACTOR SHALL IMMEDIATELY NOTIFY THE ARCHITECT SHOULD ANY SUCH UNIDENTIFIED CONDITIONS BE DISCOVERED.
2. THE CONTRACTOR SHALL BE RESPONSIBLE FOR ANY DAMAGES WHICH MAY RESULT FROM HIS FAILURE TO EXACTLY LOCATE AND PRESERVE ALL EXISTING UNDERGROUND UTILITIES.

FOUNDATION

1. ALL PORTIONS OF WORK PERTAINING TO EXCAVATIONS, FOUNDATIONS AND RETAINING WALLS SHALL CONFORM TO TITLE 24, PART 2, CHAPTER 18A.
2. THE FOUNDATION DESIGN IS BASED ON A GEOTECHNICAL REPORT BY:

   LEIGHTON CONSULTING, INC.
   DATED: JANUARY 10, 2022
   PROJECTNO.: 12429.018
3. AN ALLOWABLE SOIL BEARING PRESSURE OF 3500 PSF WAS USED FOR DESIGN. BOTTOM OF FOOTINGS SHALL BE 24" MINIMUM BELOW LOWEST ADJACENT FINAL GRADE AND BEAR ON APPROVED NATURAL GRADE OR COMPACTED FILL.

   CLASS OF MATERIALS: CLAYEY SANDSTONE
4. SEE SPECIFICATIONS FOR EARTHWORK OPERATIONS.
5. THE CONTRACTOR SHALL PROVIDE FOR DE-WATERING OF EXCAVATIONS FROM EITHER SURFACE WATER, GROUND WATER OR SEEPAGE.
6. THE CONTRACTOR SHALL PROVIDE FOR THE DESIGN, APPROVALS, PERMITS, INSTALLATION AND MONITORING OF ALL CRIBBING, SHEATHING AND SHORING REQUIRED TO SAFELY RETAIN TEMPORARY EXCAVATIONS.
7. EXCAVATIONS FOR FOOTINGS SHALL BE APPROVED BY THE GEOTECHNICAL ENGINEER PRIOR TO PLACING CONCRETE AND REINFORCING. THE CONTRACTOR SHALL NOTIFY THE GEOTECHNICAL ENGINEER WHEN EXCAVATIONS ARE READY FOR INSPECTION. THE GEOTECHNICAL ENGINEER SHALL SUBMIT A LETTER OF COMPLIANCE TO THE OWNER.
8. ALL EXCAVATIONS SHALL BE PROPERLY BACKFILLED. DO NOT PLACE BACKFILL BEHIND RETAINING WALLS BEFORE CONCRETE HAS ATTAINED FULL DESIGN STRENGTH. THE CONTRACTOR SHALL BRACE OR PROTECT ALL BUILDING AND PIT WALLS BELOW GRADE FROM LATERAL LOADS UNTIL ATTACHING FLOORS ARE COMPLETELY IN PLACE AND HAVE ATTAINED FULL DESIGN STRENGTH. THE CONTRACTOR SHALL PROVIDE FOR DESIGN, PERMITS AND INSTALLATION AND REMOVAL OF SUCH BRACING.
9. FOOTING BACKFILL AND UTILITY TRENCH BACKFILL WITHIN BUILDING AREA SHALL BE MECHANICALLY COMPACTED IN LAYERS, TO THE APPROVAL OF THE GEOTECHNICAL ENGINEER. FLOODING WILL NOT BE PERMITTED.
10. ALL ABANDONED FOOTINGS, UTILITIES, ETC., THAT INTERFERE WITH NEW CONSTRUCTION, SHALL BE REMOVED.
11. THE CONTRACTOR SHALL IMMEDIATELY NOTIFY THE ARCHITECT SHOULD ANY BURIED STRUCTURES, SUCH AS CESSPOOLS, CISTERNS, FOUNDATIONS, ETC., BE FOUND.

CONCRETE

1. ALL PORTIONS OF WORK PERTAINING TO CONCRETE CONSTRUCTION SHALL CONFORM TO TITLE 24, PART 2, CHAPTER 19A.
2. CONCRETE MIXES SHALL BE DESIGNED BY A QUALIFIED TESTING LABORATORY. MIX DESIGNS SHALL CONFORM TO ACI 318, SEC. 26.4, CBC SEC.1903A AND 1904A. MIX DESIGNS SHALL INCORPORATE THE FOLLOWING CRITERIA:
    - MINIMUM OF 5 SACKS OF CEMENT PER CUBIC YARD OF CONCRETE. MAXIMUM OF 7 SACKS OF CEMENT PER CUBIC YARD OF CONCRETE.
    - MAXIMUM WATER/CEMENT RATIO (BY WEIGHT) OF CONCRETE IN CONTACT WITH SOIL SHALL BE 0.45.
    - MAXIMUM SLUMP SHALL NOT EXCEED 3" ± 1" FOR FOOTINGS, SLABS ON GRADE, AND MASS CONCRETE; AND 4" ± 1" FOR OTHER CONCRETE. SLUMP LIMITATIONS NOTED SHALL APPLY TO CONCRETE MIX PRIOR TO THE ADDITION OF ANY WATER-REDUCING ADMIXTURES OR SUPER-PLASTICIZERS. MAXIMUM SLUMP MAY BE INCREASED TO 5 +/- 1" FOR MIX INCLUDING WATER-REDUCING ADMIXTURES OR SUPER-PLASTICIZERS.
    - CALCIUM CHLORIDE OR ADMIXTURES CONTAINING CHLORIDE(S) SHALL NOT BE USED.
3. SCHEDULE OF STRUCTURAL CONCRETE 28 DAY MINIMUM STRENGTHS AND TYPES:
    - FOOTINGS, CAISSONS, GRADE BEAMS 145 PCF, f'c = 4500 PSI
    - SLABS ON GRADE 145 PCF, f'c = 4500 PSI
    - ELSEWHERE UNLESS NOTED 145 PCF, f'c = 4500 PSI
4. PORTLAND CEMENT SHALL CONFORM TO ASTM C-150, TYPE II. CEMENT USED FOR CONCRETE IN CONTACT WITH SOIL SHALL CONFORM TO ASTM C-150, TYPE V.
5. AGGREGATE FOR NORMALWEIGHT CONCRETE SHALL CONFORM TO ASTM C-33. COMBINED AGGREGATE GRADATION OF ⅜" MAXIMUM (PEA GRAVEL) SHALL NOT BE USED.
6. READY MIXED CONCRETE SHALL CONFORM TO ASTM C-94.
7. PLACEMENT OF CONCRETE SHALL CONFORM TO ACI 304. CLEAN AND ROUGHEN TO ¼" AMPLITUDE ALL CONCRETE SURFACES AGAINST WHICH CONCRETE IS TO BE PLACED.
8. ALL REINFORCING BARS, ANCHOR BOLTS AND OTHER CONCRETE INSERTS SHALL BE SECURED IN POSITION PRIOR TO PLACING CONCRETE.
9. PROVIDE SLEEVES FOR PLUMBING AND ELECTRICAL OPENINGS IN CONCRETE BEFORE PLACING. DO NOT CUT ANY REINFORCING WHICH MAY CONFLICT. CORING IN CONCRETE IS NOT PERMITTED EXCEPT AS SHOWN. NOTIFY THE STRUCTURAL ENGINEER, IN ADVANCE, OF CONDITIONS NOT SHOWN ON THE STRUCTURAL DRAWINGS.
10. THE FOLLOWING MINIMUM CONCRETE COVER SHALL BE PROVIDED FOR REINFORCEMENT:

    CONCRETE CAST AGAINST AND PERMANENTLY EXPOSED TO EARTH .... 3"

    CONCRETE EXPOSED TO EARTH OR WEATHER:
    #6 THROUGH #18 BARS .... 2"
    #5 BARS, W31 OR D31 WIRE, AND SMALLER .... 1½"

    CONCRETE NOT EXPOSED TO WEATHER OR IN CONTACT WITH GROUND:
    SLABS, WALLS, JOISTS:
    #14 AND #18 BARS .... 1½"
    #11 BAR AND SMALLER .... ¾"
    BEAMS, COLUMNS:
    PRIMARY REINFORCEMENT STIRRUPS, TIES, SPIRALS .... 1½"
11. CONDUITS OR PIPES SHALL NOT BE EMBEDDED WITHIN A SLAB, WALL, BEAM, OR COLUMN, UNLESS SPECIFICALLY DETAILED.
12. SEE ARCHITECTURAL AND STRUCTURAL DRAWINGS FOR ALL MOLDS, GROOVES, REVEALS, ORNAMENTS AND GROUNDS TO BE CAST IN CONCRETE.
13. DRYPACK WHERE NOTED ON DRAWINGS SHALL CONSIST OF 1 PART PORTLAND CEMENT AND 2½ PARTS OF FINE AGGREGATE CONFORMING TO ASTM C-33 WITH ENOUGH WATER TO FORM A BALL WHEN SQUEEZED IN THE HAND. THE SPACE BETWEEN TWO SURFACES REQUIRING DRYPACK SHALL BE PACKED WITH THE DRYPACK MATERIAL BY TAMPING OR RAMMING WITH A BAR OR ROD UNTIL THE VOIDS ARE COMPLETELY FILLED.
14. NON-SHRINK GROUT WHERE NOTED ON DRAWINGS SHALL BE A PRE-MIXED COMPOUND CONSISTING OF NON-METALLIC AGGREGATE, CEMENT, WATER REDUCING AND PLASTICIZING ADDITIVES, CAPABLE OF DEVELOPING A MINIMUM COMPRESSIVE STRENGTH OF 8,000 PSI AT 28 DAYS. WHERE APPLICATION THICKNESS EXCEEDS MANUFACTURER'S LIMITATIONS, EXTEND WITH ⅜" (GRAVEL) AGGREGATE IN ACCORDANCE WITH MANUFACTURER'S RECOMMENDATIONS.
15. IF APPROVED BY DIVISION OF THE STATE ARCHITECT, BATCH PLANT INSPECTION MAY BE REDUCED TO PERIODIC SUBJECT TO THE REQUIREMENTS OF CBC SEC. 1705A.3.3.1.

REGISTERED PROFESSIONAL ENGINEER LARRY R. KAPRIELIAN No. 2795 Exp. 9-30-23 STRUCTURAL STATE OF CALIFORNIA

LICENSED ARCHITECT ROGER CLARKE No. C-21340 Exp. 10-31-23 STATE OF CALIFORNIA

STAMPS

IDENTIFICATION STAMP
DIV. OF THE STATE ARCHITECT
APP: 04-120895 INC:
REVIEWED FOR
SS ☑ FLS ☑ ACS ☑
DATE: 06/27/2022
AGENCY APPROVAL
File No:37-H4 A04-120895

KNA STRUCTURAL ENGINEERS
9931 Muirlands Boulevard, Irvine, CA 92618
WWW.KNAstructural.com

KNA JOB NO: 203.654
CONSULTANT BRANDING

RUHNAU CLARKE ARCHITECTS

REINFORCING STEEL

1. ALL PORTIONS OF WORK PERTAINING TO FABRICATION AND PLACEMENT OF REINFORCING STEEL SHALL CONFORM TO TITLE 24, PART 2, CHAPTER 19A.
2. REINFORCING BARS SHALL CONFORM TO ASTM A-615 GRADE 60, EXCEPT #3 BARS MAY BE GRADE 40. REINFORCING BARS THAT ARE TO BE WELDED SHALL CONFORM TO ASTM A-706, GRADE 60.
3. WELDING OF REINFORCEMENT SHALL BE WITH LOW HYDROGEN ELECTRODES AND SHALL CONFORM TO STRUCTURAL WELDING CODE - REINFORCING STEEL, AWS D1.4, BY THE AMERICAN WELDING SOCIETY AND CBC SEC. 1903A.8. WELDING RODS USED FOR THE WELDING OF REINFORCING SHALL BE E80XX. ALL WELDING SHALL BE PERFORMED BY CERTIFIED WELDERS.
4. ALL REINFORCING BAR BENDS SHALL BE MADE COLD. ALL #5 OR LARGER REINFORCING BARS SHALL NOT BE RE-BENT.
5. FUSION WELDED REINFORCING STEEL ASSEMBLIES SHALL CONFORM TO SEC. 1903A.8. TIES/STIRRUP BARS IN FUSION WELDED ASSEMBLIES SHALL CONFORM TO ASTM A-706, AND LONGITUDINAL HOLDING WIRES SHALL CONFORM TO ASTM-1064. CONTRACTOR AT HIS OPTION MAY USE FUSION WELDED REINFORCING STEEL ASSEMBLIES AT LOCATIONS APPROVED BY DSA. CONTRACTOR SHALL PROVIDE DRAWINGS SUITABLE FOR SUBMITTAL AND APPROVAL BY DSA SHOWING PROPOSED LOCATIONS AND DETAILS NOT ALREADY DETAILED ON DSA APPROVED DRAWINGS. CONTRACTOR ASSUMES ALL RESPONSIBILITY FOR ANY AND ALL DELAYS RELATED TO APPROVAL AND USE OF FUSION WELDED REINFORCING STEEL ASSEMBLIES.
6. DOWELS BETWEEN FOOTINGS AND WALLS OR COLUMNS SHALL BE THE SAME GRADE, SIZE, SPACING AND NUMBER AS THE VERTICAL REINFORCEMENT, RESPECTIVELY.
7. REINFORCING SPLICES SHALL BE MADE AS INDICATED ON THE DRAWINGS.
8. ALL VERTICAL REINFORCING SHALL BE CONTINUOUS BETWEEN TWO DIAPHRAGM LEVELS, UNLESS NOTED OTHERWISE.

CONCRETE BLOCK MASONRY (f'm = 2,000 PSI)

1. ALL PORTIONS OF WORK PERTAINING TO CONCRETE BLOCK MASONRY CONSTRUCTION SHALL CONFORM TO TITLE 24, PART 2, CHAPTER 21A.
2. THE STRENGTH OF CONCRETE BLOCK MASONRY CONSTRUCTION SHALL BE DETERMINED BY THE UNIT STRENGTH METHOD IN ACCORDANCE WITH CBC SEC. 2105A.6, AND TMS 602 ARTICLE 1.4B.2b.
3. CONCRETE BLOCKS SHALL BE HOLLOW LOAD-BEARING CONCRETE MASONRY UNITS CONFORMING TO ASTM C-90, MEDIUM WEIGHT UNITS, NET COMPRESSIVE STRENGTH OF 2,000 PSI. USE OPEN END UNITS AT VERTICAL REINFORCING.
4. CEMENT SHALL BE AS SPECIFIED FOR CONCRETE.
5. MORTAR SHALL CONFORM TO ASTM C-270, FOR TYPE S MORTAR. MORTAR SHALL ATTAIN A MINIMUM COMPRESSIVE STRENGTH OF 1800 PSI AT 28 DAYS.
6. GROUT SHALL CONFORM TO ARTICLE 2.2 OF TMS 602. GROUT PROPORTIONS SHALL CONFORM TO ASTM C-476, TABLE 1, FOR COARSE GROUT. USE SUFFICIENT WATER FOR GROUT TO FLOW INTO ALL CELLS WITHOUT SEGREGATION. SIKA GROUT AID ADMIXTURE, OR APPROVED EQUAL, SHALL BE USED. GROUT SHALL ATTAIN A MINIMUM COMPRESSIVE STRENGTH OF 2000 PSI AT 28 DAYS.
7. PROVIDE A MINIMUM ONE BAR DIAMETER OF GROUT BETWEEN MAIN REINFORCING AND MASONRY UNITS. PROVIDE A MINIMUM OF ½" OF GROUT AROUND ALL BOLTS EMBEDDED IN MASONRY.
8. CELLS SHALL BE IN VERTICAL ALIGNMENT. DOWELS IN FOOTINGS SHALL BE SET TO ALIGN WITH CORES CONTAINING VERTICAL REINFORCING.
9. ALL REINFORCING BARS, ANCHOR BOLTS, STEEL PLATES, AND OTHER CMU INSERTS SHALL BE SECURED IN POSITION PRIOR TO PLACING GROUT, TO PREVENT MOVEMENT DURING GROUT PLACEMENT AND CONSOLIDATION WITH MECHANICAL VIBRATOR DIRECTLY ADJACENT.
10. ALL CELLS IN CONCRETE BLOCKS SHALL BE SOLIDLY FILLED WITH GROUT.
11. LOW-LIFT GROUTED CONSTRUCTION SHALL CONFORM TO CBC SEC. 2104A.1.3.1.2.1 AND SEC. 2104A.1.3.1.2.2. MAXIMUM GROUT POUR HEIGHT FOR LOW-LIFT CONSTRUCTION SHALL BE 4 FEET.
12. HIGH-LIFT GROUTED CONSTRUCTION SHALL CONFORM TO CBC SEC. 2104A.1.3.1.2.1, SEC. 2104A.1.3.1.2.3 AND DSA IR 21-2. MAXIMUM GROUT POUR HEIGHT SHALL NOT EXCEED 12 FEET. PROVIDE CLEANOUT OPENINGS AND ADEQUATE PROVISIONS TO PREVENT FACE SHELL DAMAGE (BLOW-OUT) AT THE BOTTOM OF EACH POUR OF GROUT.
13. GROUT POURS SHALL BE CONSOLIDATED BY MECHANICAL VIBRATION AND RECONSOLIDATED AFTER EXCESS MOISTURE HAS BEEN ABSORBED, BUT BEFORE WORKABILITY IS LOST.
14. HORIZONTAL REINFORCING SHALL BE PLACED IN BOND BEAM UNITS.
15. REFER TO ARCHITECTURAL DRAWINGS FOR SURFACE TEXTURE, HEIGHT OF MASONRY UNITS, LAYING PATTERN AND JOINT TYPE. USE RUNNING BOND PATTERN, UNLESS NOTED OTHERWISE.
16. NO PIPES OR DUCTS SHALL BE PLACED IN MASONRY CONSTRUCTION UNLESS SPECIFICALLY NOTED OR DETAILED. WHERE PIPES ARE DETAILED TO PASS THROUGH MASONRY WALLS, PROVIDE SLEEVE OR CORED HOLE 2" LARGER THAN OUTSIDE DIAMETER OF PIPE.
17. ELECTRICAL CONDUIT MAY BE ROUTED IN MASONRY WALLS AS FOLLOWS:
    A. MAXIMUM SIZE AND QUANTITY OF CONDUIT PER CELL (EXCEPT AT JUNCTION BOXES) SHALL BE AS FOLLOWS: FOR 8" BLOCK, ONE-1" DIAMETER OR TWO - ¾" DIAMETER; FOR 12" BLOCK, TWO - 1" DIAMETER OR FOUR - ¾" DIAMETER. MULTIPLE CONDUITS SHALL BE BUNDLED TOGETHER.
    B. CONDUIT SHALL NOT BE PLACED IN A MASONRY CELL CONTAINING REINFORCING.
    C. CONDUIT SHALL NOT BE PLACED IN A PILASTER.
    D. CONDUIT SHALL BE PLACED AT THE CENTERLINE OF THE WALL.
18. ALL STRUCTURAL MASONRY WORK SHALL BE CONTINUOUSLY INSPECTED DURING LAYING AND GROUTING BY A SPECIAL INSPECTOR SPECIFICALLY APPROVED BY THE ENFORCEMENT AGENCY FOR THAT PURPOSE.

PROJECT No. : 1-30-55
6/21/2022 10:26 AM

DRAWN BY: CHECKED BY:
ISSUE No.______ DATE________ DESCRIPTION________ REVISION No.______ DATE________ DESCRIPTION________
ISSUE No.______ DATE________ DESCRIPTION________ REVISION No.______ DATE________ DESCRIPTION________
ISSUE No.______ DATE________ DESCRIPTION________ REVISION No.______ DATE________ DESCRIPTION________
ISSUE No.______ DATE________ DESCRIPTION________ REVISION No.______ DATE________ DESCRIPTION________

RUHNAUCLARKE.COM
3775 TENTH STREET, RIVERSIDE CALIFORNIA 92501 (951) 684 4664 / 5751 PALMER WAY, SUITE C, CARLSBAD CALIFORNIA 92010 (760) 438 5899

GHS KITCHEN & WEIGHTROOM MOD
GROSSMONT HIGH SCHOOL
1100 MURRAY DR, EL CAJON, CA 92020
GROSSMONT UNION HIGH SCHOOL

GENERAL NOTES

S0-0.1

WELDING OF REINFORCING STEEL

1. THESE SPECIFICATIONS ARE APPLICABLE WHERE INDICATED ON THE DRAWINGS, AND TO FIELD REPAIR CONDITIONS ON A CASE BY CASE BASIS, UNLESS NOTED OTHERWISE. WHERE FIELD REPAIR CONDITIONS OCCUR, THE CONTRACTOR SHALL OBTAIN WRITTEN AUTHORIZATION FROM THE STRUCTURAL ENGINEER OF RECORD FOR EACH WELD TO BE PERFORMED USING THIS SPECIFICATION PRIOR TO THE EXECUTION OF THE WELD.
2. FOR ALL OTHER WELDING INFORMATION, REFER TO REINFORCING STEEL NOTES.

GENERAL REQUIREMENTS

1. THESE SPECIFICATIONS SHALL APPLY TO THE WELDING OF REINFORCING STEEL (EXCEPT PRESTRESSING STEEL) FOR SPLICES, STEEL CONNECTION DEVICES, INSERTS, AND ANCHORS, AS WELL AS ANY OTHER WELDING OF REINFORCING STEEL TO PRIMARY STRUCTURAL MEMBERS.
2. ALL PHASES OF WORK PERTAINING TO WELDING OF REINFORCING STEEL SHALL CONFORM TO STRUCTURAL WELDING CODE – REINFORCING STEEL, AWS D1.4, BY THE AMERICAN WELDING SOCIETY, AND SEC. 1903A.8.
3. WELDED SPLICES SHALL BE MADE ONLY IN LOCATIONS SHOWN, AND IN ACCORDANCE WITH THE DETAILS SHOWN ON THE STRUCTURAL DRAWINGS AND AS SPECIFIED HEREIN.
4. CARE SHALL BE TAKEN TO AVOID CRACKING AND EMBRITTLEMENT WHEN WELDING REINFORCING STEEL.
5. ARC STRIKES ON REINFORCING STEEL OUTSIDE THE AREA OF PERMANENT WELDS SHALL BE AVOIDED. CRACKS OR BLEMISHES RESULTING FROM ACCIDENTAL ARC STRIKES SHALL BE GROUND TO A SMOOTH CONTOUR AND INSPECTED TO INSURE SOUNDNESS.
6. TACK WELDS SHALL BE MADE USING PREHEAT AND QUALITY REQUIREMENTS APPLICABLE TO PERMANENT WELDS. TACK WELDS THAT DO NOT BECOME PART OF PERMANENT WELDS ARE PROHIBITED. UNDER NO CIRCUMSTANCES SHOULD STRESSED BARS BE TACK WELDED ALONG THEIR LENGTH.
7. WELDED SPLICES OF REINFORCING STEEL SHALL DEVELOP AT LEAST 125% OF THE SPECIFIED YIELD STRENGTH OF THE BAR.
8. WELDING SHALL NOT BE DONE ON OR WITHIN TWO BAR DIAMETERS OF ANY BENT PORTION OF A BAR THAT HAS BEEN BENT COLD.

REINFORCING STEEL AND FILLER METAL REQUIREMENTS

1. REINFORCING STEEL TO BE WELDED SHALL CONFORM TO AWS D–1.4, SECTIONS 1.3.1 AND 1.3.3, OR SHALL HAVE ITS WELDABILITY ESTABLISHED IN ACCORDANCE WITH AWS D–1.4, SECTION 1.3.2.
2. PRIOR TO WELDING, THE CHEMICAL ANALYSIS AND THE CARBON EQUIVALENT OF REINFORCING STEEL SHALL BE DETERMINED. THE CARBON EQUIVALENT (C.E.) OF REINFORCING STEEL OR SPLICE MATERIAL SHALL BE CALCULATED FROM THE CHEMICAL COMPOSITION BY THE FOLLOWING FORMULAS:

   ASTM A–615 BARS: $C.E. = \%C + \frac{\%Mn}{6}$

   ASTM A–706 BARS: $C.E. = \%C + \frac{\%Mn}{6} + \frac{\%Cu}{40} + \frac{\%Ni}{20} + \frac{\%Cr}{10} - \frac{\%Mo}{50} - \frac{\%V}{10}$

   WHERE: C = CARBON, MN = MANGANESE, CU = COPPER, NI = NICKEL, CR = CHROMIUM, MO = MOLYBDENUM, V = VANADIUM
3. THE CARBON EQUIVALENT OF ASTM A–706 BARS SHALL NOT EXCEED 0.55%.
4. MILL REPORTS STATING THE CHEMICAL COMPOSITION AND THE CARBON EQUIVALENT SHALL BE FURNISHED TO THE SPECIAL INSPECTOR FOR REVIEW. STEEL DELIVERED TO THE JOB SITE SHALL BE CLEARLY IDENTIFIED SO THAT AGREEMENT WITH THE HEAT NUMBERS OF THE MILL REPORTS CAN BE VERIFIED.
5. IF MILL REPORTS ARE NOT AVAILABLE OR IF THE MILL REPORTS DO NOT IDENTIFY ALL ELEMENTS NEEDED TO CALCULATE THE CARBON EQUIVALENT, CHEMICAL TESTS SHALL BE MADE BY AN APPROVED TESTING AGENCY. AT LEAST ONE TEST SHALL BE MADE FOR EACH BAR SIZE AND FOR EACH HEAT OR SUSPECTED HEAT.
   A. IF TESTS ARE PERFORMED PRIOR TO DELIVERY OF STEEL TO THE JOBSITE, THE SUPPLIER SHALL CLEARLY IDENTIFY AND STOCK THE STEEL SO THAT THE CHEMICAL ANALYSIS AND CARBON EQUIVALENT CAN BE CERTIFIED AT THE TIME OF DELIVERY.
   B. IF TESTS ARE PERFORMED AFTER DELIVERY OF STEEL TO THE JOBSITE, THE APPROVED TESTING AGENCY SHALL CERTIFY THE CHEMICAL ANALYSIS AND CARBON EQUIVALENT.
6. REINFORCING STEEL WHOSE CHEMISTRY AND CARBON EQUIVALENT CANNOT BE DETERMINED SHALL NOT BE WELDED.
7. FILLER METAL FOR WELDING SHALL CONFORM TO AWS D–1.4, SECTION 5.1 AND TABLE 5.1. IN ADDITION, IF REINFORCING IS TO BE WELDED TO STRUCTURAL STEEL, FILLER METAL SHALL CONFORM TO THE STRUCTURAL WELDING CODE – STEEL, AWS D1.1, BY THE AMERICAN WELDING SOCIETY.

WELDING PROCEDURES

1. APPROVED PROCEDURES
   A. EACH JOINT WELDING PROCEDURE THAT IS TO BE EMPLOYED SHALL BE ESTABLISHED IN A PROCEDURE SPECIFICATION AND SHALL BE QUALIFIED PRIOR TO USE BY TESTS AS PRESCRIBED IN AWS D–1.4, SECTION 6.2.
   B. EACH JOINT WELDING PROCEDURE SHALL BE PREPARED BY THE MANUFACTURER, FABRICATOR, OR CONTRACTOR AND SHALL BE AVAILABLE TO THOSE AUTHORIZED TO EXAMINE THEM. A SUGGESTED FORM SHOWING THE INFORMATION REQUIRED IN THE PROCEDURE SPECIFICATION IS DEFINED IN AWS D1.4, APPENDIX A.
   C. WELDING PROCEDURES FOR FILLET WELDS WHICH CONFORM TO THE APPLICABLE PROVISIONS OF AWS D–1.4 SHALL BE DEEMED AS PREQUALIFIED.
   D. WELDING PROCEDURES PREVIOUSLY QUALIFIED, AND ACCEPTED BY THE ENFORCEMENT AGENCY MAY BE DEEMED AS PREQUALIFIED.
   E. PROCEDURE QUALIFICATION TESTS SHALL BE WITNESSED BY A REGISTERED SPECIAL INSPECTOR IN STRUCTURAL STEEL ASSEMBLY AND TESTED BY AN APPROVED TESTING AGENCY. THE RESULTS OF SUCCESSFUL PROCEDURE QUALIFICATIONS SHALL BE SUBMITTED TO THE ENFORCEMENT AGENCY.
   F. THE APPROVED PROCEDURE SPECIFICATION SHALL BE MADE AVAILABLE AT THE SITE WHERE WELDING IS PERFORMED.
2. WELDER QUALIFICATION
   A. ALL WELDERS AND WELDING OPERATORS TO BE EMPLOYED IN WELDING REINFORCING BARS SHALL HAVE BEEN QUALIFIED BY TESTS AS PRESCRIBED IN AWS D–1.4, SECTION 6.3, UNLESS EVIDENCE OF PREVIOUS QUALIFICATION IS ACCEPTED BY THE ENFORCEMENT AGENCY AND THE REGISTERED SPECIAL INSPECTOR.
   B. WELDER QUALIFICATION TESTS SHALL BE WITNESSED BY A REGISTERED SPECIAL INSPECTOR IN STRUCTURAL STEEL ASSEMBLY.
   C. UPON REQUEST OF THE SPECIAL INSPECTOR OR THE ENFORCEMENT AGENCY, WELDERS SHALL PROVIDE EVIDENCE OF QUALIFICATION OF EACH PROCESS, POSITION AND TYPE OF WELD TO BE PERFORMED.

PREHEAT AND INTERPASS TEMPERATURE REQUIREMENTS
AND POST WELDING COOLING REQUIREMENTS

1. THE PREHEAT AND INTERPASS TEMPERATURES SHALL BE AS NOTED IN THE TABLE BELOW.
2. ALL WELD TYPES REQUIRE PREHEATING, INCLUDING TACK WELDS, FILLET WELDS AND ARC STRIKES.
3. SOME REINFORCING STEELS WITH HIGH CARBON EQUIVALENTS MAY NEED POST WELDING HEAT TREATMENT IN ADDITION TO MAINTAINING PREHEAT AND INTERPASS TEMPERATURES. POST WELDING HEAT TREATMENT SHALL BE PROVIDED AS SPECIFIED IN THE APPROVED PROCEDURE SPECIFICATIONS. PREHEAT TEMPERATURES SHALL BE VERIFIED BY TEMPERATURE STICKS, UNLESS ANOTHER METHOD IS SPECIFIED AND APPROVED.
4. ALL WELD TYPES REQUIRE PREHEATING, INCLUDING TACK WELDS, FILLET WELDS AND ARC STRIKES.
5. SOME REINFORCING STEELS WITH HIGH CARBON EQUIVALENTS MAY NEED POST WELDING HEAT TREATMENT IN ADDITION TO MAINTAINING PREHEAT AND INTERPASS TEMPERATURES. POST WELDING HEAT TREATMENT SHALL BE PROVIDED AS SPECIFIED IN THE APPROVED PROCEDURE SPECIFICATIONS. PREHEAT TEMPERATURES SHALL BE VERIFIED BY TEMPERATURE STICKS, UNLESS ANOTHER METHOD IS SPECIFIED AND APPROVED.

WELDING OF REINFORCING STEEL (CONT'D)

MINIMUM PREHEAT AND INTERPASS TEMPERATURES (A),(B)

CARBON EQUIVALENT RANGE, % (C),(D)	SIZE OF REINFORCING BAR	SHIELDED METAL ARC WELDING WITH LOW HYDROGEN ELECTRODES, GAS METAL ARC WELDING OR FLUX CORED ARC WELDING °F	°C
0.40 MAX.	UP TO #11 INCLUSIVE: #14 AND #18:	NONE (E) 50	NONE (E) 10
0.41 – 0.45 INCLUSIVE	UP TO #11 INCLUSIVE: #14 AND #18:	NONE (E) 50	NONE (E) 10
0.46 – 0.55 INCLUSIVE	UP TO #6 INCLUSIVE: #7 TO #11 INCLUSIVE: #14 AND #18:	NONE (E) 50 200	NONE (E) 10 90
0.56 – 0.65 INCLUSIVE	UP TO #6 INCLUSIVE: #7 TO #11 INCLUSIVE: #14 AND #18:	100 200 300	40 90 150
0.66 – 0.75 INCLUSIVE	UP TO #6 INCLUSIVE: #7 TO #18 INCLUSIVE:	300 400	150 200
ABOVE 0.75	WELDING NOT PERMITTED		

A. WHEN REINFORCING STEEL IS TO BE WELDED TO MAIN STRUCTURAL STEEL, THE PREHEAT REQUIREMENTS OF THE STRUCTURAL STEEL SHALL ALSO BE CONSIDERED. (SEE AWS D1.1, TABLE TITLED "PREQUALIFIED MINIMUM PREHEAT AND INTERPASS TEMPERATURE"). THE MINIMUM PREHEAT REQUIREMENT TO APPLY IN THIS SITUATION SHALL BE THE HIGHER REQUIREMENT OF THE TWO TABLES. HOWEVER, EXTREME CAUTION SHALL BE EXERCISED IN THE CASE OF WELDING REINFORCING STEEL TO QUENCHED AND TEMPERED STEELS, AND SUCH MEASURES SHALL BE TAKEN AS TO SATISFY THE PREHEAT REQUIREMENTS FOR BOTH. IF NOT POSSIBLE, WELDING SHALL NOT BE USED TO JOIN THE TWO BASE METALS.

B. WELDING SHALL NOT BE DONE WHEN THE AMBIENT TEMPERATURE IS LOWER THAN 0°F (–18°C). WHEN THE BASE METAL IS BELOW THE TEMPERATURE LISTED FOR THE WELDING PROCESS BEING USED AND THE SIZE AND CARBON EQUIVALENT RANGE OF THE BAR BEING WELDED, IT SHALL BE PREHEATED (EXCEPT AS OTHERWISE PROVIDED) IN SUCH A MANNER THAT THE CROSS SECTION OF THE BAR FOR NOT LESS THAN 6 IN. ON EACH SIDE OF THE JOINT SHALL BE AT OR ABOVE THE SPECIFIED MINIMUM TEMPERATURE. PREHEAT AND INTERPASS TEMPERATURES MUST BE SUFFICIENT TO PREVENT CRACK FORMATION.

C. AFTER WELDING IS COMPLETE, BARS SHALL BE ALLOWED TO COOL NATURALLY TO AMBIENT TEMPERATURE. ACCELERATED COOLING IS PROHIBITED.

D. WHERE IT IS IMPRACTICAL TO OBTAIN CHEMICAL ANALYSIS, WELDING OF REINFORCING IS PROHIBITED.

E. WHEN THE BASE METAL IS BELOW 32°F (0°C), THE BASE METAL SHALL BE PREHEATED TO AT LEAST 70°F (21°C), OR ABOVE, AND MAINTAINED AT THIS MINIMUM TEMPERATURE DURING WELDING.

TESTS AND INSPECTIONS

1. INSPECTION OF ALL SHOP AND FIELD WELDING OPERATIONS SHALL BE MADE BY A SPECIAL INSPECTOR SPECIFICALLY APPROVED BY THE ENFORCEMENT AGENCY FOR THAT PURPOSE. SUCH INSPECTOR SHALL BE TRAINED AND THOROUGHLY EXPERIENCED IN INSPECTING REINFORCING BAR WELDING OPERATIONS. THE INSPECTOR'S ABILITY TO DISTINGUISH BETWEEN SOUND AND UNSOUND WELDING SHALL BE RELIABLY ESTABLISHED.
2. THE SPECIAL INSPECTOR SHALL MAKE A SYSTEMATIC RECORD OF ALL WELDS. THIS RECORD SHALL INCLUDE:
   A. IDENTIFICATION MARKS OF WELDERS.
   B. LIST OF DEFECTIVE WELDS.
   C. MANNER OF CORRECTION OF DEFECTS.
3. THE SPECIAL INSPECTOR SHALL CHECK THE MATERIAL, EQUIPMENT, DETAILS OF CONSTRUCTION, AND PROCEDURES AS WELL AS THE WELDS. THE INSPECTOR SHALL ALSO CHECK THE ABILITY OF THE WELDER. THE INSPECTOR SHALL FURNISH A REPORT THAT THE WELDING WHICH IS REQUIRED TO BE INSPECTED IS PROPER AND HAS BEEN DONE IN ACCORDANCE WITH THE APPROVED PLANS AND SPECIFICATIONS. THE WELDING INSPECTOR SHALL USE ALL MEANS NECESSARY TO DETERMINE THE QUALITY OF THE WELD. THE INSPECTOR MAY USE GAMMA RAY, MAGNAFLUX, TREPANNING, SONICS OR ANY OTHER AID TO VISUAL INSPECTION WHICH THE INSPECTOR MAY DEEM NECESSARY TO ASSURE THE ADEQUACY OF THE WELDING.
4. TWO TENSILE TESTS SHALL BE MADE OF SAMPLE WELDS OF THE LARGEST SIZE BAR FOR EACH TYPE OF WELDING.

STRUCTURAL STEEL AND MISCELLANEOUS METAL

1. ALL PORTIONS OF WORK PERTAINING TO STRUCTURAL STEEL CONSTRUCTION SHALL CONFORM TO TITLE 24, PART 2, CHAPTER 22A.
2. ALL STRUCTURAL STEEL SHALL CONFORM TO ASTM A–992, UNLESS NOTED OTHERWISE.
3. ROUND HOLLOW STRUCTURAL SECTION (HSS) SHALL CONFORM TO ASTM A–500, GRADE B.
4. SQUARE AND RECTANGULAR HOLLOW STRUCTURAL SECTIONS (HSS) SHALL CONFORM TO ASTM A–500, GRADE B.
5. CHANNELS, ANGLES AND PLATES SHALL CONFORM TO ASTM A–36, UNLESS NOTED OTHERWISE.
6. ALL BOLTS SHALL CONFORM TO THE FOLLOWING, UNLESS NOTED OTHERWISE:
   - ANCHOR BOLT RODS: ASTM F1554, GRADE 36
   - TYPICAL STEEL CONNECTIONS: ASTM F3125, GRADE A325N OR F1852 (NON–SLIP–CRITICAL)
   - MOMENT AND DRAG CONNECTIONS: ASTM F3125, GRADE A325SC OR F1852 (SLIP–CRITICAL)
   - MISCELLANEOUS CONNECTIONS NOT NOTED OTHERWISE: ASTM A–307
7. HIGH STRENGTH BOLTS SHALL CONFORM TO THE FOLLOWING, UNLESS NOTED OTHERWISE:
   - JOINT ASSEMBLIES USING HIGH–STRENGTH BOLTS SHALL BE IN ACCORDANCE WITH SPECIFICATION FOR STRUCTURAL JOINTS USING HIGH STRENGTH BOLTS, BY THE RESEARCH COUNCIL ON STRUCTURAL CONNECTIONS.
   - ALL HIGH STRENGTH BOLTS SHALL CONFORM TO ASTM F3125, GRADE A325 OR F1852
     TWIST OFF TYPE, NUTS SHALL CONFORM TO ASTM A–563, AND WASHERS SHALL CONFORM TO ASTM F–436.
   - PAINT SHALL NOT BE PERMITTED ON CONTACT SURFACES UNLESS NOTED OTHERWISE. CONTACT SURFACES OF BOLTED PARTS SHALL BE DESCALED AND FREE OF DIRT, OIL, BURRS, PITS, AND OTHER DEFECTS WHICH PREVENT SOLID SEATING OF PARTS.
   - SLIP–CRITICAL JOINT ASSEMBLIES SHALL BE FULLY PRE–TENSIONED BY TURN–OF–NUT TIGHTENING, CALIBRATED WRENCH TIGHTENING, INSTALLATION OF ALTERNATE DESIGN BOLTS OR BY DIRECT TENSION INDICATOR TIGHTENING.
8. STRUCTURAL STEEL IN SFRS LINES SHALL BE CONNECTED IN SLIP–CRITICAL JOINTS COMPLYING WITH AISC 341–16, SECTION D.2.2, CLASS A FAYING SURFACE.
9. ANCHOR BOLTS SHALL BE HEX HEADED. BENT BAR ANCHORS SHALL NOT BE USED.
10. STRUCTURAL STEEL SHOP DRAWINGS SHALL BE SUBMITTED TO THE ARCHITECT FOR REVIEW AND APPROVAL PRIOR TO FABRICATION.
11. ALL WELDING SHALL CONFORM TO THE STRUCTURAL WELDING CODE – STEEL, AWS D1.1 AND STRUCTURAL WELDING CODE SEISMIC SUPPLEMENT AWS D1.8, BY THE AMERICAN WELDING SOCIETY. WELDING RODS SHALL BE E70XX.
12. ALL WELDING IN SFRS LINES SHALL COMPLY WITH AWS D1.8 AND AISC 341–16 SECTION A3.4A.
13. THE FILLER METAL FOR ALL WELDING SHALL HAVE A NOTCH TOUGHNESS OF NOT LESS THAN 20 FT–LBS AT 0 DEGREES F, AS MEASURED BY A STANDARD CHARPY V–NOTCH TEST, ASTM E23, IN ACCORDANCE WITH THE APPLICABLE FILLER METAL SPECIFICATION REFERENCED IN AWS D1.1 AND SEISMIC SUPPLEMENT AWS D1.8.
14. ALL DEMAND CRITICAL WELDS SHALL HAVE A NOTCH TOUGHNESS OF NOT LESS THAN 40 FT–LBS AT 70 DEGREES F, AS MEASURED BY STANDARD CHARPY V–NOTCH TEST, ASTM E23, IN ACCORDANCE WITH THE APPLICABLE FILLER METAL SPECIFICATION REFERENCED IN AWS D1.1 AND SEISMIC SUPPLEMENT AWS D1.8.
15. ALL WELDING SHALL BE PERFORMED BY CERTIFIED WELDERS.
16. ALL WELDS NOT SPECIFIED SHALL BE CONTINUOUS FILLET WELDS. SIZE OF WELDS SHALL BE BASED ON AWS D1.1 FOR THICKER PART JOINED.
17. BOLT HOLES SHALL BE 1/16" LARGER IN DIAMETER THAN NOMINAL SIZE OF BOLT USED, UNLESS NOTED OTHERWISE. BOLT HOLES AT COLUMN BASEPLATES MAY BE 3/16" MAXIMUM LARGER IN DIAMETER THAN NOMINAL SIZE OF ANCHOR BOLT USED, UNLESS NOTED OTHERWISE.
18. DO NOT PAINT STRUCTURAL STEEL SURFACES THAT ARE TO RECEIVE SPRAY–APPLIED FIREPROOFING OR TO BE ENCASED IN CONCRETE OR MASONRY.
19. ALL STRUCTURAL STEEL AND MISCELLANEOUS METAL ITEMS, INCLUDING CONNECTORS, EXPOSED TO THE WEATHER SHALL BE HOT–DIPPED GALVANIZED, AFTER FABRICATION.
20. STRUCTURAL STEEL SHALL BE DELIVERED TO THE JOB SITE FREE OF EXCESSIVE RUST, MILL SCALE, GREASE, ETC.
21. OPENINGS SHALL NOT BE PLACED IN STEEL MEMBERS UNLESS SPECIFICALLY DETAILED.

UNISTRUT METAL FRAMING

1. ALL PORTIONS OF WORK PERTAINING TO UNISTRUT METAL FRAMING CONSTRUCTION SHALL CONFORM TO TITLE 24, PART 2, CHAPTER 22A.
2. ALL METAL FRAMING MATERIAL, FITTINGS, AND RELATED ACCESSORIES SHALL BE MANUFACTURED BY UNISTRUT CORPORATION.
3. FRAMING MATERIAL, FITTINGS AND RELATED ACCESSORIES OTHER THAN THOSE SPECIFIED SHALL BE SUBMITTED AS A SUBSTITUTION, AND ARE SUBJECT TO THE REVIEW AND APPROVAL OF THE ENFORCEMENT AGENCY, THE ARCHITECT, AND THE STRUCTURAL ENGINEER.
4. ALL MATERIAL IS TO BE DELIVERED TO THE JOB SITE IN ORIGINAL FACTORY PACKAGING.
5. ALL CHANNEL MEMBERS SHALL BE FABRICATED FROM STRUCTURAL STEEL CONFORMING TO ASTM A–653, GRADE 33.
6. ALL FITTINGS SHALL BE FABRICATED FROM STEEL CONFORMING TO ASTM A–575, A–576, A–36 OR A–635.
7. UNISTRUT COMPONENTS SHALL BE FINISHED WITH RUST INHIBITING ACRYLIC ENAMEL PAINT APPLIED BY ELECTRO–DEPOSITION, AFTER CLEANING AND PHOSPHATING, AND THOROUGHLY BAKED.
8. UNISTRUT NUTS SHALL BE CASE HARDENED STEEL AND SHALL HAVE TWO TOOTHED GROOVES IN THE TOP OF THE NUT TO ENGAGE THE INTURNED EDGES OF THE CHANNEL TO PREVENT ANY MOVEMENT OF THE BOLT AND NUT WITHIN THE FRAMING MEMBER. STANDARD NUTS SHALL CONFORM TO ASTM A1011 SS GR33 (MATERIAL ONLY). SCREWS SHALL CONFORM TO SAE J429 GR (ALSO MEETS AND EXCEEDS ASTM A–307).
9. WELDING SHALL BE IN ACCORDANCE WITH STRUCTURAL WELDING CODE – SHEET STEEL, AWS D1.3, BY THE AMERICAN WELDING SOCIETY.

AUTOMATIC END WELDED STUDS

1. AUTOMATIC END WELDED STUDS SHALL BE NELSON GRANULAR FLUX–FILLED SHEAR CONNECTORS OR ANCHOR STUDS OR AN APPROVED EQUAL.
2. STUDS SHALL BE MANUFACTURED OF COLD DRAWN STEEL, WHICH CONFORMS TO ASTM SPECIFICATION A–29, GRADES 1010 THRU 1020.
3. STUDS SHALL BE AUTOMATICALLY END WELDED IN ACCORDANCE WITH THE MANUFACTURER'S RECOMMENDATIONS IN SUCH A MANNER AS TO PROVIDE COMPLETE FUSION BETWEEN THE END OF THE STUD AND THE PLATE. THERE SHOULD BE NO POROSITY OR EVIDENCE OF LACK OF FUSION BETWEEN THE WELDED END OF THE STUD AND THE PLATE. THE STUD SHALL DECREASE IN LENGTH DURING WELDING APPROXIMATELY 1/8" FOR 5/8" DIAMETER STUDS AND SMALLER, AND 3/16" FOR STUDS LARGER THAN 5/8" DIAMETER. WELDING SHALL BE DONE ONLY BY QUALIFIED WELDERS APPROVED BY THE WELDING INSPECTOR.

WOOD

1. ALL PORTIONS OF WORK PERTAINING TO WOOD CONSTRUCTION SHALL CONFORM TO TITLE 24, PART 2, CHAPTER 23, INCLUDING ADDITIONAL REQUIREMENTS AND EXCEPTIONS, AS APPLICABLE.
2. LUMBER SHALL BE GRADED IN ACCORDANCE WITH THE STANDARD GRADING RULES NO. 17 OF THE WEST COAST LUMBER INSPECTION BUREAU, OR THE STANDARD GRADING RULES OF THE WESTERN WOOD PRODUCTS ASSOCIATION.
3. DIMENSION LUMBER SHALL BE DOUGLAS FIR–LARCH, NO. 1 AND BETTER GRADE, UNLESS NOTED OTHERWISE. TIMBERS SHALL BE DOUGLAS FIR LARCH, NO. 1 GRADE, UNLESS NOTED OTHERWISE. MOISTURE CONTENT AT TIME OF INSTALLATION SHALL BE 19% OR LESS.
4. ALL PLYWOOD SHALL BE STRUCTURAL 1 AND COMPLY WITH PRODUCT STANDARD PS–1. USE PLYWOOD NAILS SAME GAUGE AS COMMON WIRE NAILS WITH LENGTHS AT LEAST EQUAL TO PLYWOOD THICKNESS PLUS REQUIRED PENETRATION IN ACCORDANCE WITH CBC SECTIONS 2306.2 (AWC SDPWS TABLE 4.2A) OR 2306.3 (AWC SDPWS TABLE 4.3A), AS APPLICABLE.
5. EXPOSED MEMBERS SHALL BE SELECT STRUCTURAL GRADE, FREE OF HEART CENTER (WHERE SIZE PERMITS), AND SELECTED FOR APPEARANCE AND STRAIGHTNESS.
6. BOLT HOLES SHALL BE A MINIMUM OF 1/32" TO A MAXIMUM OF 1/16" LARGER DIAMETER THAN NOMINAL SIZE OF BOLT USED. RETIGHTEN ALL NUTS PRIOR TO CLOSING IN.
7. STANDARD CUT WASHERS SHALL BE USED UNDER BOLT HEADS AND NUTS AGAINST WOOD. USE HEAVY PLATE OR MALLEABLE IRON WASHERS WHERE NOTED.
8. DO NOT BORE OR NOTCH MEMBERS, EXCEPT WHERE SHOWN IN DETAILS. OBTAIN ENFORCEMENT AGENCY AND STRUCTURAL ENGINEER'S APPROVAL FOR ANY HOLES OR NOTCHES NOT DETAILED.
9. METAL CONNECTORS FOR WOOD CONSTRUCTION SHALL BE SIMPSON "STRONG–TIE", KC METALS, OR APPROVED EQUAL, UNLESS NOTED OTHERWISE. PRODUCT CALLOUT ON PLANS REFERS TO SIMPSON "STRONG TIE" MODEL NUMBER AND KC METALS PRODUCT REFERENCE NUMBER. FILL ALL ROUND AND TRIANGLE HOLES WITH THE SPECIFIED NAILS. APPROVED EQUALS MAY ONLY BE USED WITH PRIOR APPROVAL FROM ENFORCEMENT AGENCY AND THE STRUCTURAL ENGINEER.
10. ALL SILL PLATES WHICH REST ON FOUNDATION OR SLAB ON GRADE SHALL BE PRESERVATIVE–TREATED IN ACCORDANCE WITH CBC SEC. 2303.1.9, AND SHALL BEAR THE QUALITY MARK OF AN APPROVED INSPECTION AGENCY THAT MAINTAINS CONTINUING SUPERVISION, TESTING AND INSPECTION OVER THE QUALITY OF PRESERVATIVE–TREATED WOOD. CUTS AND HOLES SHALL BE RETREATED.
11. JOISTS MORE THAN 8–INCH DEPTH SHALL BE CONTINUOUSLY BRIDGED BY SOLID BLOCKING, 2 INCHES THICK AND THE FULL DEPTH OF THE JOIST, SPACED AT 8 FEET ON CENTER.
12. ALL NAILING SHALL CONFORM TO CBC TABLE 2304.10.1 – FASTENING SCHEDULE, USING COMMON WIRE NAILS. PREDRILL ALL NAILS 20D AND LARGER AND WHERE REQUIRED TO PREVENT SPLITTING. FASTENERS IN CONTACT WITH PRESERVATIVE–TREATED WOOD SHALL BE OF HOT–DIPPED ZINC–COATED GALVANIZED STEEL.
13. LAG SCREWS SHALL HAVE LEAD HOLES BORED BEFORE INSTALLING. HOLE DIAMETERS SHALL BE AS FOLLOWS:
    A. SHANK PORTION — SAME DIAMETER AND LENGTH OF SHANK.
    B. THREADED PORTION — 0.40 TO 0.70 DIAMETER OF SHANK AND SAME LENGTH AS THREADED PORTION.

GLUED LAMINATED WOOD

1. SEE WOOD NOTES FOR ADDITIONAL INFORMATION.
2. GLUED LAMINATED WOOD MEMBERS SHALL BE FABRICATED IN ACCORDANCE WITH ANSI/AITC A190.1 AND ASTM D–3737.
3. BEAMS SHALL BE DOUGLAS FIR COMBINATION 24F–V8 DF/DF, DRY SERVICE CONDITIONS. SIMPLE SPAN BEAMS MAY BE DOUGLAS FIR COMBINATION 24F–V4 DF/DF, DRY SERVICE CONDITIONS. ALL HEARTWOOD ALASKAN YELLOW CEDAR, COMBINATION 20F–V12 AC/AC, WET SERVICE CONDITIONS, SHALL BE USED FOR EXTERIOR EXPOSED MEMBERS. EXTERIOR TYPE ADHESIVES SHALL BE USED IN ALL CASES.
4. BEAMS SHALL BE ARCHITECTURAL APPEARANCE GRADE WHERE EXPOSED, AND INDUSTRIAL APPEARANCE GRADE ELSEWHERE.
5. ALL LAMINATIONS FOR GLUED LAMINATED BEAMS SHALL BE 2" NOMINAL THICKNESS AND OF THE WIDTH SHOWN OR NOTED. ALL LAMINATIONS SHALL BE PARALLEL TO THE BOTTOM EDGE OF THE BEAM, EXCEPT AS NOTED.
6. THE MAXIMUM MOISTURE CONTENT AT THE TIME OF GLUING SHALL NOT EXCEED 16 PERCENT. THE RANGE OF MOISTURE CONTENT OF LAMINATIONS ASSEMBLED INTO A SINGLE MEMBER SHALL NOT EXCEED 5 PERCENT AT THE TIME OF GLUING.
7. ALL GLUED LAMINATED TIMBER SHALL BE CONTINUOUSLY INSPECTED DURING FABRICATION BY A SPECIAL INSPECTOR SPECIFICALLY APPROVED BY THE ENFORCEMENT AGENCY FOR THAT PURPOSE. AN AITC CERTIFICATE WILL NOT MEET THIS REQUIREMENT. SPECIAL INSPECTION IS NOT REQUIRED FOR NONCUSTOM MEMBERS 5½" MAXIMUM WIDTH AND 18" MAXIMUM DEPTH, AND WITH A MAXIMUM CLEAR SPAN OF 32 FEET, MANUFACTURED AND MARKED IN ACCORDANCE WITH ANSI/AITC A190.1, SECTION 6.1.1 FOR NONCUSTOM MEMBERS.
8. WRAP AND PROTECT MEMBERS IN ACCORDANCE WITH AITC 111. BUNDLE WRAP CONCEALED BEAMS. INDIVIDUALLY WRAP BEAMS THAT WILL BE EXPOSED TO VIEW. LEAVE INDIVIDUAL WRAPPING IN PLACE UNTIL FINISHING OCCURS.
9. MEMBERS SHALL NOT BE DRAGGED OR DROPPED. CARE SHALL BE TAKEN IN HANDLING TO PREVENT DAMAGE TO FINISHED SURFACE.
10. NOTCHING OR BORING OF GLUED LAMINATED BEAMS SHALL NOT BE ALLOWED UNLESS SPECIFICALLY DETAILED.

MACHINE APPLIED NAILING

1. THE USE OF MACHINE NAILING IS SUBJECT TO A SATISFACTORY JOB SITE DEMONSTRATION AND THE APPROVAL OF THE STRUCTURAL ENGINEER AND THE ENFORCEMENT AGENCY. THE APPROVAL IS SUBJECT TO CONTINUED SATISFACTORY PERFORMANCE. IF NAILHEADS PENETRATE THE OUTER PLY MORE THAN WOULD BE NORMAL FOR A HAND HAMMER, OR IF MINIMUM ALLOWABLE EDGE DISTANCES ARE NOT MAINTAINED, THE PERFORMANCE WILL BE DEEMED UNSATISFACTORY AND SHALL BE DISCONTINUED.

IDENTIFICATION STAMP
DIV. OF THE STATE ARCHITECT
APP: 04-120895 INC:
REVIEWED FOR
SS ☑ FLS ☑ ACS ☑
DATE: 06/27/2022
File No:37-H4 A04-120895

STAMPS

KNA STRUCTURAL ENGINEERS
9931 Muirlands Boulevard, Irvine, CA 92618
WWW.KNAstructural.com

KNA JOB NO: 203.654
CONSULTANT BRANDING

RUHNAU CLARKE ARCHITECTS

WOOD I-JOISTS

1. SEE WOOD NOTES FOR ADDITIONAL INFORMATION.
2. WOOD I–JOISTS SHALL BE MANUFACTURED BY REDBUILT OR APPROVED EQUAL.
3. JOISTS BY MANUFACTURERS OTHER THAN THOSE SPECIFIED SHALL BE SUBMITTED AS A SUBSTITUTION, AND ARE SUBJECT TO THE REVIEW AND APPROVAL OF THE ENFORCEMENT AGENCY, THE ARCHITECT, AND THE STRUCTURAL ENGINEER. JOISTS SHALL BE SUPPLIED BY ONE MANUFACTURER. SEE SPECIFICATIONS FOR ADDITIONAL REQUIREMENTS.
4. JOISTS SUBMITTED AS A SUBSTITUTION SHALL RECEIVE APPROVAL TO BID FROM ARCHITECT AND STRUCTURAL ENGINEER PRIOR TO BID. JOISTS SUBMITTED AS A SUBSTITUTION SHALL MEET THE FOLLOWING CRITERIA:

   MANUFACTURER SHALL HAVE A MINIMUM OF 5 YEARS DOCUMENTED EXPERIENCE MANUFACTURING AND DELIVERING SPECIFIED PRODUCTS TO PROJECTS OF SIMILAR SIZE AND SCOPE IN CALIFORNIA

   MANUFACTURER SHALL HAVE A CURRENT ICC EVALUATION REPORT

   PRODUCTS SHALL BE FABRICATED IN A FACILITY CURRENTLY LICENSED BY THE LOS ANGELES DEPARTMENT OF BUILDING AND SAFETY.
5. BLOCKING, BRIDGING, STIFFENERS, FILLERS AND BACKER BLOCKS SHALL BE INSTALLED IN CONFORMANCE WITH THE MANUFACTURER'S STANDARDS, AND AS DETAILED.
6. SIZE, SPACING, AND LOCATION OF HOLES IN WEBS OF JOISTS SHALL BE IN CONFORMANCE WITH THE MANUFACTURER'S STANDARDS.
7. DO NOT CUT, DRILL, OR NOTCH FLANGES.
8. JOISTS SHALL BE CONTINUOUSLY BRIDGED AT MID–SPAN. PROVIDE ADDITIONAL BRIDGING AT 16 FEET ON CENTER WHEN JOIST SPAN EXCEEDS 32 FEET.
9. MULTIPLE JOIST ASSEMBLIES SHALL BE CONSTRUCTED IN ACCORDANCE WITH MANUFACTURER'S STANDARDS.
10. SHOP DRAWINGS AND CALCULATIONS PREPARED BY THE MANUFACTURER SHALL BE SUBMITTED TO THE ARCHITECT FOR REVIEW AND APPROVAL. DRAWINGS AND CALCULATIONS SHALL BEAR THE SIGNATURE OF A CIVIL OR STRUCTURAL ENGINEER LICENSED IN THE STATE OF CALIFORNIA.
11. DESIGN LOADS:

	DEAD LOAD	LIVE LOAD	PARTITION
ROOF	17 PSF	20 PSF	NOT APPLICABLE

    A. LIVE LOAD REDUCTION PERMITTED WHEN APPLICABLE
12. DEFLECTION CRITERIA:

	LIVE LOADS	TOTAL LOAD
ROOF MEMBER SUPPORTING PLASTER	L/360	L/240
ROOF MEMBER NOT SUPPORTING PLASTER	L/240	L/180

FASTENING SCHEDULE

1. NAILING IS TYPICAL UNLESS NOTED OR DETAILED OTHERWISE. ALL NAILS SHALL BE COMMON WIRE NAILS. DRILL HOLES FOR 20d NAILS AND LARGER AND AS REQUIRED TO PREVENT SPLITTING. FASTENERS IN CONTACT WITH PRESERVATIVE–TREATED WOOD SHALL BE OF HOT–DIPPED ZINC–COATED GALVANIZED STEEL.

JOISTS TO SILL OR GIRDER	(3)8d TOENAIL
BRIDGING TO JOIST	(2)8d TOENAIL EACH END
SOLE PLATE TO JOIST OR BLOCKING	16d @ 16" O.C. TYPICAL FACE NAIL
SOLE PLATE TO JOIST OR BLOCKING AT BRACED WALL PANEL	3–16d
TOP PLATE TO STUD	(2)16d END NAIL
STUD TO SOLE PLATE	(4)8d TOENAIL, OR (2)16d END NAIL
DOUBLE STUDS	16d @ 24" O.C.. FACE NAIL
DOUBLE TOP PLATES	16d @ 16" O.C.
DOUBLE TOP PLATES AT LAP SPLICE	(8)16d
BLOCKING BETWEEN JOISTS OR RAFTERS TO TOP PLATE	(3)8d TOENAIL
RIM JOIST TO TOP PLATE	8d @ 6" O.C. TOENAIL
TOP PLATES, LAPS AND INTERSECTIONS	(2)16d FACE NAIL
CONTINUOUS HEADER, TWO PIECES	16d @ 16" O.C. ALONG EDGE
CEILING JOISTS TO PLATE	(3)8d TOENAIL
CONT. HEADER TO STUD	(4)8d TOENAIL
CEILING JOISTS, LAPS OVER PARTITIONS	(3)16d FACE NAIL
CEILING JOISTS TO PARALLEL RAFTERS	(3)16d FACE NAIL
RAFTER TO PLATE	(3)8d TOENAIL
BUILT–UP CORNER STUDS	16d @ 24" O.C.
BUILT UP GIRDER AND BEAMS	20d @ 32" O.C. FACE NAIL AT TOP AND BOTTOM STAGGERED ON OPPOSITE SIDES, AND (2)20d FACE NAIL AT ENDS AND AT EACH SPLICE
COLLAR TIE TO RAFTER	(3)10d FACE NAIL
JACK RAFTER TO HIP	(3)10d TOENAIL, OR (2)16d FACE NAIL
ROOF RAFTER TO 2x RIDGE BEAM	(2)16d TOENAIL, OR (2)16d FACE NAIL
JOIST TO BAND JOIST	(3)16d FACE NAIL
LEDGER STRIP	(3)16d FACE NAIL

2. PLYWOOD NAILING – REFER TO PLANS.

POST-INSTALLED ANCHORS

1. ACCEPTABLE EQUIVALENT MANUFACTURERS OF POST-INSTALLED EXPANSION ANCHORS AND SCREW ANCHORS SHALL BE HILTI INC., SIMPSON STRONG-TIE COMPANY INC., OR DEWALT, UNO.

2. TESTS FOR POST-INSTALLED ANCHORS IN HARDENED CONCRETE SHALL CONFORM TO TITLE 24, PART 2, CHAPTER 19A, SECTION 1910A.5.

3. POST-INSTALLED ANCHOR INSTALLATION SHALL BE INSPECTED BY A SPECIAL INSPECTOR SPECIFICALLY APPROVED BY THE ENFORCEMENT AGENCY FOR THAT PURPOSE.

4. POST-INSTALLED ANCHOR TESTING SHALL BE DONE IN THE PRESENCE OF THE PROJECT INSPECTOR.

5. TEST QUANTITY OF POST-INSTALLED ANCHORS AS NOTED BELOW:

APPLICATION	QUANTITY
SILL PLATES	10% OF BOLTS
STRUCTURAL	100% OF BOLTS
NON-STRUCTURAL (EQUIP. ANCHORAGE, ETC.)	50% OF BOLTS

6. IF ANY ANCHOR FAILS TESTING, TEST ALL ANCHORS OF THE SAME CATEGORY NOT PREVIOUSLY TESTED UNTIL TWENTY (20) CONSECUTIVE ANCHORS PASS, THEN RESUME INITIAL TESTING FREQUENCY.

7. TORQUE TESTING SHALL BE APPLIED BY CALIBRATED WRENCH. TENSION TESTING (WHERE INDICATED) SHALL BE APPLIED BY HYDRAULIC JACK OR CALIBRATED SPRING LOADING DEVICE.

8. THE FOLLOWING CRITERIA SHALL APPLY FOR THE ACCEPTANCE OF INSTALLED POST-INSTALLED ANCHORS:

   A. TORQUE WRENCH METHOD: THE APPLICABLE TEST TORQUE MUST BE ATTAINED WITHIN ONE-HALF (½) TURN OF THE NUT. SLEEVE ANCHORS ⅜ INCH DIAMETER OR LESS MUST ATTAIN THE SPECIFIED TEST TORQUE WITHIN ONE-QUARTER (¼) TURN OF THE NUT, AND THREADED ANCHORS MUST ATTAIN THE SPECIFIED TEST TORQUE WITHIN ONE-QUARTER (¼) TURN OF THE SCREW AFTER INITIAL SEATING OF THE SCREW HEAD.

   B. HYDRAULIC RAM METHOD: (FOR TENSION TESTING WHERE INDICATED) ANCHORS SHALL MAINTAIN THE TENSION TEST LOAD FOR A MINIMUM OF 15 SECONDS AND SHALL EXHIBIT NO DISCERNABLE MOVEMENT DURING THE TENSION TEST. (AN EXAMPLE OF DISCERNABLE MOVEMENT WOULD BE LOOSENING OF THE WASHER UNDER THE NUT).

9. TEST LOADS (1)(2)(3)

TORQUE TEST VALUES – EXPANSION ANCHORS NORMAL WEIGHT CONCRETE		
ANCHOR DIAMETER (INCH)	ANCHOR DEPTH (INCHES)	TORQUE (FT-LBF)
⅜	2	30
½	2	50
	3¼	50
⅝	3⅛	40
	4	40
¾	3¾	110
	4¾	110

(1) TEST VALUES ARE BASED ON KWIK BOLT TZ2 (KB-TZ2) EXPANSION ANCHORS BY HILTI, INC. (ICC EVALUATION REPORT NUMBER ESR-4266).

(2) TEST VALUES ARE BASED ON CARBON STEEL ANCHORS.

(3) VERIFY TORQUE VALUES WITH MANUFACTURER FOR SIMPSON STRONG-BOLT 2 (ICC ESR-3037) OR DEWALT POWER-STUD+SD2 (ICC ESR-2502)

TORQUE TEST VALUES – SCREW ANCHORS NORMAL WEIGHT CONCRETE		
ANCHOR DIAMETER (INCH)	ANCHOR DEPTH (INCHES)	TORQUE (FT-LBF)
¼	1 ⅝"	24
	2 ½"	24
⅜	2¾	50
	3½	50
½	3¾	65
	4½	65
⅝	4½	100
	6	100
¾	6	150
	6¾	150

(1) TEST VALUES ARE BASED ON TITEN HD SCREW ANCHORS BY SIMPSON STRONG-TIE, (ICC EVALUATION REPORT NUMBER ESR-2713).

(2) VERIFY TORQUE VALUES WITH MANUFACTURER FOR HILTI KWIK HUS-EZ SCREW ANCHORS (ICC ESR-3027) OR DEWALT SCREW-BOLT+SCREW ANCHOR (ICC ESR-3889)

POWDER DRIVEN CONCRETE FASTENERS

1. THE USE OF POWDER DRIVEN FASTENERS FOR TENSION LOADS IS LIMITED TO SUPPORT OF MINOR LOADS, SUCH AS ACOUSTICAL CEILINGS, DUCTWORK, CONDUIT, ETC. POWDER DRIVEN CONCRETE FASTENERS MAY NOT BE USED IN CURBS.

2. ALLOWABLE TENSION LOADS SHALL BE LIMITED TO 100 POUNDS, OR 80% OF ICC APPROVED VALUES, WHICHEVER IS LESS. QUALIFICATION FOR USE OF ALL POWER ACTUATED TOOLS MUST MEET ANSI A10.3 STANDARD AS REQUIRED BY THE MANUFACTURER AND ALL OSHA REQUIREMENTS.

3. THE OPERATOR, TOOL, AND FASTENERS SHALL BE PREQUALIFIED BY THE PROJECT INSPECTOR. HE SHALL OBSERVE THE TESTING OF THE FIRST TEN FASTENER INSTALLATIONS. A "PULL-OUT" TEST LOAD OF 200 LBS. SHALL BE APPLIED TO THE PIN IN SUCH A MANNER AS NOT TO RESIST THE SPALLING TENDENCY OF THE CONCRETE SURROUNDING THE PIN. THEREAFTER, RANDOM TESTS, UNDER THE PROJECT INSPECTOR'S SUPERVISION, SHALL BE MADE OF APPROXIMATELY ONE IN TEN PINS. IF ANY PIN FAILS TESTING, TEST ALL PINS OF THE SAME CATEGORY NOT PREVIOUSLY TESTED UNTIL TWENTY CONSECUTIVE PASS, THEN RESUME THE INITIAL TESTING FREQUENCY.

4. FASTENERS SHALL HAVE ICC APPROVAL FOR THE TYPE OF CONCRETE INTO WHICH THE FASTENERS ARE INSTALLED.

5. POWDER DRIVEN CONCRETE FASTENERS ARE NOT PERMITTED IN PRESTRESSED CONCRETE MEMBERS.

6. WHEN INSTALLING DRILLED-IN ANCHORS AND/OR POWDER DRIVEN PINS IN NON-PRESTRESSED REINFORCED CONCRETE, USE CARE AND CAUTION TO AVOID CUTTING OR DAMAGE TO THE REINFORCING BARS. MAINTAIN A MINIMUM CLEARANCE OF ONE INCH BETWEEN THE REINFORCEMENT AND DRILLED-IN ANCHOR AND/OR PIN.

ANCHORS AND/OR DOWELS INSTALLED WITH ADHESIVE

1. ANCHORS AND/OR DOWELS SHALL BE INSTALLED WITH ADHESIVE ONLY WHERE INDICATED ON DRAWINGS.

2. ANCHORS AND/OR DOWELS SHALL BE INSTALLED IN CONCRETE USING ONE OF THE FOLLOWING PRODUCTS IN ACCORDANCE WITH THE APPLICABLE ICC/IAPMO REPORT:

   - HILTI HIT-HY 200 ADHESIVE — ICC NO. ESR-3187
   - SIMPSON SET-XP ADHESIVE — ICC NO. ESR-2508
   - DEWALT PURE110+ ADHESIVE — ICC NO. ESR-3298

4. ADHESIVE SYSTEMS OTHER THAN THOSE SPECIFIED SHALL BE SUBMITTED AS A SUBSTITUTION, AND ARE SUBJECT TO THE REVIEW AND APPROVAL OF THE ENFORCEMENT AGENCY, THE ARCHITECT, AND THE STRUCTURAL ENGINEER.

5. HOLES SHALL BE DRILLED WITH NON-REBAR-CUTTING DRILL BITS.

6. HOLES SHALL BE CLEAN OF CONCRETE DUST AND DEBRIS USING A STEEL WIRE BRUSH AND OIL-FREE COMPRESSED AIR. HOLES SHALL ALSO BE FREE OF STANDING WATER.

7. PROJECT INSPECTOR SHALL VERIFY INSTALLATION OF ANCHORS OR DOWELS IN ACCORDANCE WITH MANUFACTURER'S RECOMMENDATIONS, INCLUDING CLEANLINESS OF DRILL HOLES AND PROPER EMBEDMENT.

8. ANCHORS SET IN CONCRETE AND GROUTED MASONRY SHALL BE TESTED TO 2 TIMES THE ASD ALLOWABLE TENSION LOAD, 1.25 TIMES THE LRFD STRENGTH CAPACITY, OR 80% OF THE YIELD STRENGTH OF THE BOLT FOR THE SPECIFIC LOCATION OF THE ANCHOR TO BE TESTED, WHICHEVER IS LESS. TORQUE TESTING IS NOT PERMITTED. SEE DETAILS FOR TEST LOADS.

9. ADHESIVE ANCHORS INSTALLED IN HORIZONTAL TO VERTICALLY OVERHEAD ORIENTATION TO SUPPORT SUSTAINED TENSION LOADS SHALL BE DONE BY A CERTIFIED ADHESIVE ANCHOR INSTALLER (AAI) AS CERTIFIED THROUGH ACI/CRSI (ACI 318-14 17.8.2.2). PROOF OF CURENT CERTIFICATION SHALL BE SUBMITTED TO THE ENGINEER FOR APPROVAL PRIOR TO COMMENCEMENT OF INSTALLATION.

10. ADHESIVE ANCHORS MUST BE INSTALLED IN CONCRETE AGED A MINIMUM OF 21 DAYS.

STAMPS

IDENTIFICATION STAMP
DIV. OF THE STATE ARCHITECT
APP: 04-120895 INC:
REVIEWED FOR
SS ☑ FLS ☑ ACS ☑
DATE: 06/27/2022
File No:37.n4 A04-120895

KNA STRUCTURAL ENGINEERS
9931 Muirlands Boulevard, Irvine, CA 92618
WWW.KNAstructural.com
KNA JOB NO: 203.654
CONSULTANT BRANDING

RUHNAU CLARKE ARCHITECTS

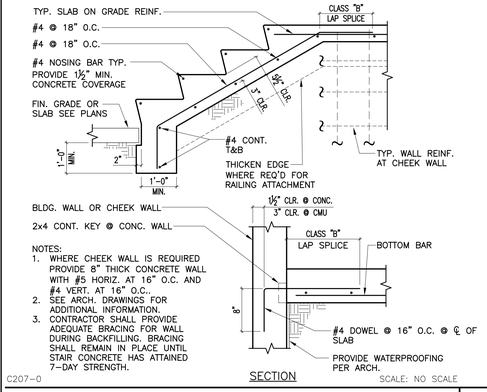

NOTES:
1. WHERE CHEEK WALL IS REQUIRED PROVIDE 8" THICK CONCRETE WALL WITH #5 HORIZ. AT 16" O.C. AND #4 VERT. AT 16" O.C..
2. SEE ARCH. DRAWINGS FOR ADDITIONAL INFORMATION.
3. CONTRACTOR SHALL PROVIDE ADEQUATE BRACING FOR WALL DURING BACKFILLING. BRACING SHALL REMAIN IN PLACE UNTIL STAIR CONCRETE HAS ATTAINED 7-DAY STRENGTH.

C207-0 SCALE: NO SCALE

CONCRETE STAIR ON GRADE | 17

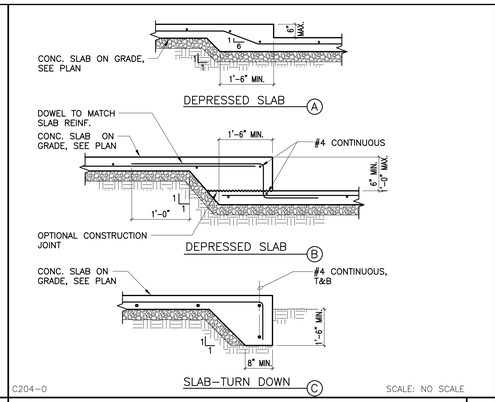

C204-0 SCALE: NO SCALE

DEPRESSED S.O.G. AND SLAB EDGE | 13

PAD FOOTING SCHEDULE				
	A	B	REINF.	REMARKS
PF-3/3A	3'-0"	2'-0"	(5)#5 EA. WAY	
PF-4/4A	4'-0"	2'-0"	(7)#5 EA. WAY	
PF-5/5A	5'-0"	2'-0"	(9)#5 EA. WAY	
PF-6/6A	6'-0"	2'-0"	(10)#5 EA. WAY	T&B
PF-7/7A	7'-0"	2'-0"	(12)#5 EA. WAY	T&B

NOTE: "A" DENOTES PAD FTG. HAS T&B REINFORCING.

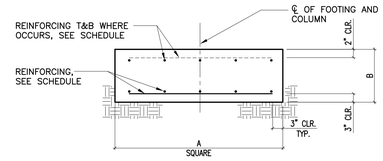

C107-0 SCALE: NO SCALE

PAD FOOTING SCHEDULE | 9

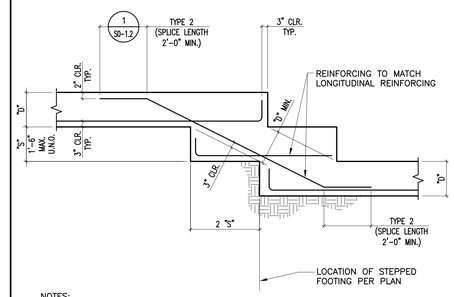

NOTES:
1. FOR FOOTING REINFORCING SEE FOOTING ELEVATIONS AND/OR SECTIONS.
2. VERTICAL WALL DOWELS SHALL EXTEND TO BOTTOM OF FOOTING.

C108-0 SCALE: NO SCALE

STEPPED FTG: ONE LAYER OF REINF. | 5

STAMPS

IDENTIFICATION STAMP
DIV. OF THE STATE ARCHITECT
APP: 04-120895 INC:
REVIEWED FOR
SS ☑ FLS ☑ ACS ☑
DATE: 06/27/2022

KNA STRUCTURAL ENGINEERS
9931 Muirlands Boulevard, Irvine, CA 92618
WWW.KNAstructural.com

KNA JOB NO: 203.654
CONSULTANT BRANDING

RUHNAU CLARKE ARCHITECTS

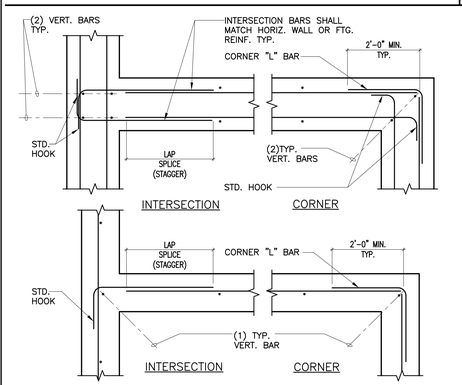

C303-0 SCALE: NO SCALE

REINF. AT FTG. OR WALL INTERSECTION | 18

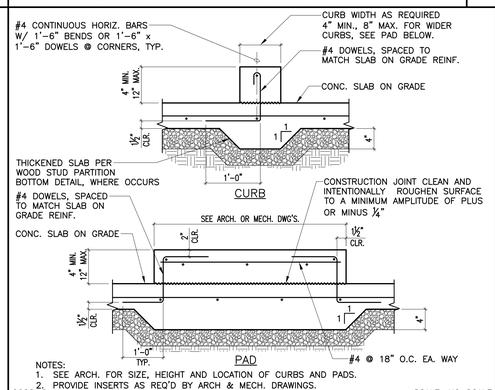

NOTES:
1. SEE ARCH. FOR SIZE, HEIGHT AND LOCATION OF CURBS AND PADS.
2. PROVIDE INSERTS AS REQ'D BY ARCH & MECH. DRAWINGS.

C208-0 SCALE: NO SCALE

CONCRETE CURB AND PADS | 14

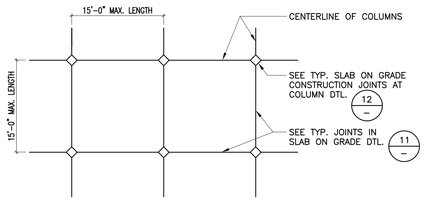

NOTES:
1. PANELS SHALL BE DIVIDED BY CONTROL JOINTS AND CONSTRUCTION JOINTS.
2. PROVIDE CONTROL JOINTS PERPENDICULAR TO CONSTRUCTION JOINTS.
3. IN AREAS WHERE COLUMNS DO NOT OCCUR PROVIDE CONSTRUCTION OR CONTROL JOINTS AT 15'-0" MAX.
4. BETWEEN 1:1 TO 2:1 PANEL SHALL NOT EXCEED 200 SQUARE FEET IN AREA.
5. SEE PLANS FOR LOCATIONS WHERE ADDITIONAL JOINTS MAY BE REQUIRED.
6. THE CONTRACTOR SHALL SUBMIT A PROPOSED LAYOUT OF JOINTS FOR APPROVAL PRIOR TO POURING SLABS.
7. PROVIDE JOINTS @ ALL RE-ENTRANT CORNERS IN SLAB CONSTRUCTION.

C201-0 SCALE: NO SCALE

METHOD OF POURING S.O.G. | 10

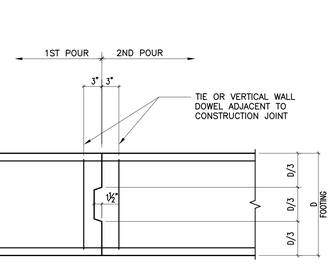

C105-0 SCALE: NO SCALE

CONTINUOUS FOOTING CONST. JOINT | 6

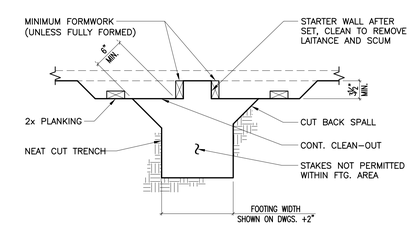

NOTES:
1. FOUNDATION CONCRETE MAY BE PLACED DIRECTLY INTO NEAT EXCAVATIONS PROVIDED THE FOUNDATION TRENCH WALLS ARE STABLE AS DETERMINED BY THE GEOTECHNICAL ENGINEER.
2. FOOTING WIDTHS SHALL NOT BE MORE THAN 4" WIDER THAN SHOWN ON PLAN.
3. FORMWORK NOT PERMITTED BELOW GRADE UNLESS FULLY FORMED.

C101-0 SCALE: 1"=1'-0"

FOOTING POURED AGAINST EARTH | 1

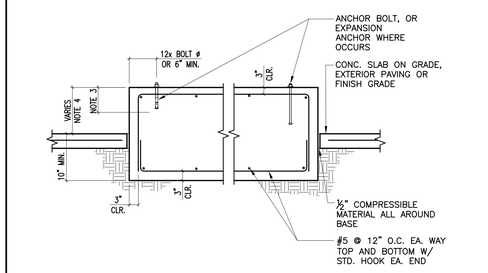

NOTES:
SEE MECHANICAL AND ELECTRICAL DRAWINGS FOR THE FOLLOWING:
1. LOCATION AND DIMENSIONS OF BASES.
2. LOCATION, NUMBER, SIZE AND TYPE OF BOLTS.
3. EMBEDMENT OF EXPANSION ANCHORS WHERE OCCURS.
4. CURB HEIGHT, 4" MIN.

C209-0 SCALE: NO SCALE

CONCRETE BASE FOR EQUIPMENT | 19

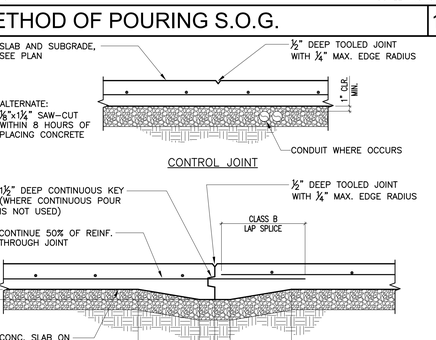

C202-0 SCALE: NO SCALE

JOINT IN SLAB ON GRADE | 11

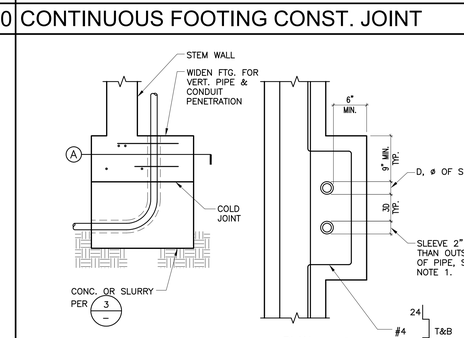

NOTES:
1. PIPES MAY BE WRAPPED IN 1" THICK LOOSE FOAM IN LIEU OF SLEEVING.
2. CONDUIT MAY BE ROUTED UP THROUGH FOOTING WITHOUT SLEEVES OR FOAM WRAP.

C109-0 SCALE: NO SCALE

TYP. VERT. PIPES OR COND. THRU FTG. | 7

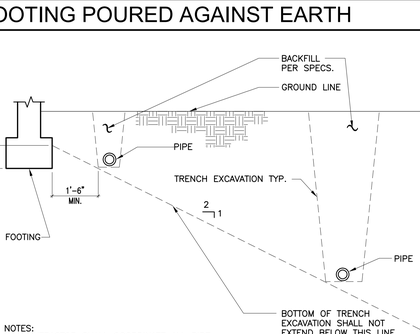

NOTES:
1. CONTRACTOR SHALL COORDINATE ALL PIPE LOCATIONS WITH BUILDING FOUNDATION REQUIREMENTS.
2. IF REQUIREMENTS AS SHOWN CANNOT BE MET, STEP FOOTING PER TYPICAL "STEPPED FOOTING" DETAIL 5 –

C102-0 SCALE: 1"=1'-0"

PIPES PARALLEL TO FOOTINGS | 2

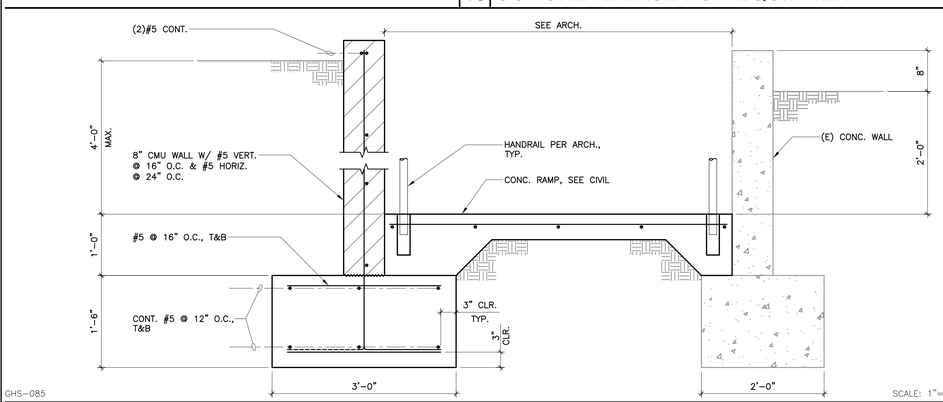

GHS-085 SCALE: 1"=1'-0"

TYPICAL CONCRETE RAMP. | 16

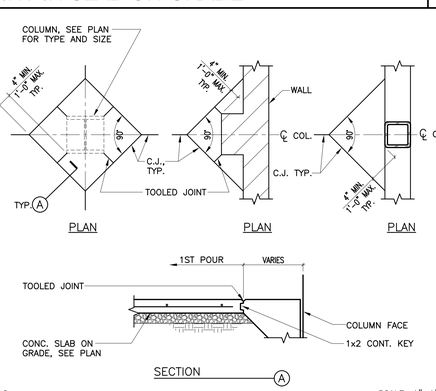

C203-0 SCALE: 1"=1'-0"

S.O.G. CONST. JOINTS AT COL. | 12

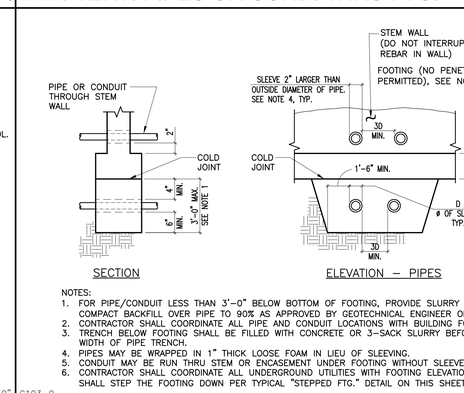

NOTES:
1. FOR PIPE/CONDUIT LESS THAN 3'-0" BELOW BOTTOM OF FOOTING, PROVIDE SLURRY AS SHOWN. FOR PIPE/CONDUIT MORE THAN 3'-0" BELOW BOTTOM OF FOOTING, COMPACT BACKFILL OVER PIPE TO 90% AS APPROVED BY GEOTECHNICAL ENGINEER OR STEP FTG SO THAT DIMENSION DOES NOT EXCEED 3'-0".
2. CONTRACTOR SHALL COORDINATE ALL PIPE AND CONDUIT LOCATIONS WITH BUILDING FOUNDATION REQUIREMENTS.
3. TRENCH BELOW FOOTING SHALL BE FILLED WITH CONCRETE OR 3-SACK SLURRY BEFORE POURING FOOTING. CONCRETE FILL SHALL BE SAME WIDTH AS FOOTING AND FULL WIDTH OF PIPE TRENCH.
4. PIPES MAY BE WRAPPED IN 1" THICK LOOSE FOAM IN LIEU OF SLEEVING.
5. CONDUIT MAY BE RUN THRU STEM OR ENCASEMENT UNDER FOOTING WITHOUT SLEEVES OR FOAM WRAP.
6. CONTRACTOR SHALL COORDINATE ALL UNDERGROUND UTILITIES WITH FOOTING ELEVATIONS. WHERE PIPES OR CONDUIT ARE IN CONFLICT WITH THE FOOTING, CONTRACTOR SHALL STEP THE FOOTING DOWN PER TYPICAL "STEPPED FTG." DETAIL ON THIS SHEET. NOT ALL REQUIRED STEPS IN THE FOOTING ARE SHOWN ON PLAN.

C103-0 SCALE: NO SCALE

PIPES AND CONDUIT PERPENDICULAR TO FOOTINGS | 3

PROJECT No. : 1-30-55
6/21/2022 10:26 AM

DRAWN BY: CHECKED BY:

ISSUE No.	DATE	DESCRIPTION	REVISION No.	DATE	DESCRIPTION
ISSUE No.	DATE	DESCRIPTION	REVISION No.	DATE	DESCRIPTION
ISSUE No.	DATE	DESCRIPTION	REVISION No.	DATE	DESCRIPTION
ISSUE No.	DATE	DESCRIPTION	REVISION No.	DATE	DESCRIPTION

RUHNAUCLARKE.COM
3775 TENTH STREET, RIVERSIDE CALIFORNIA 92501 (951) 684 4664 / 5751 PALMER WAY, SUITE C, CARLSBAD CALIFORNIA 92010 (760) 438 5899

GHS KITCHEN & WEIGHTROOM MOD
GROSSMONT HIGH SCHOOL
1100 MURRAY DR, EL CAJON, CA 92020
GROSSMONT UNION HIGH SCHOOL

TYPICAL CONCRETE DETAILS

S0-1.1

1-30-55

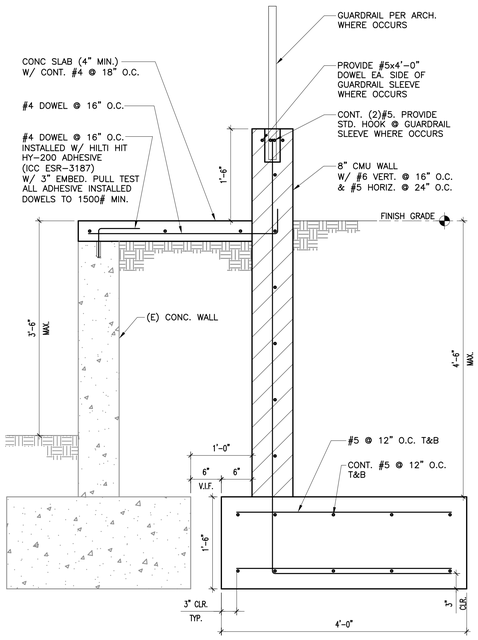

GHS-087 SCALE: 1"=1'-0"

BLEACHER RETAINING WALL

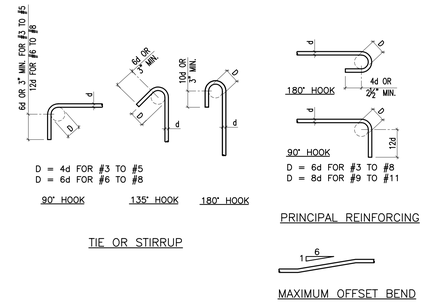

NOTES:
1. ALL BAR BENDS SHALL BE MADE COLD.
2. ALL REINFORCING BARS #5 & LARGER SHALL NOT BE RE-BENT.

C409-0 SCALE: NO SCALE

BAR BENDS

REGISTERED PROFESSIONAL ENGINEER — JOHN C. KAPP — No. 2795 Exp. 9-30-23 — STRUCTURAL — STATE OF CALIFORNIA

LICENSED ARCHITECT — ROGER CLARKE — No. C-21340 Exp. 10-31-23 — STATE OF CALIFORNIA

STAMPS

IDENTIFICATION STAMP
DIV. OF THE STATE ARCHITECT
APP: 04-120895 INC:
REVIEWED FOR
SS ☑ FLS ☑ ACS ☑
DATE: 06/27/2022
File No:37.n4 A04-120895

KNA STRUCTURAL ENGINEERS
9931 Muirlands Boulevard, Irvine, CA 92618
WWW.KNAstructural.com

KNA JOB NO: 203.654
CONSULTANT BRANDING

RUHNAU CLARKE ARCHITECTS

REINFORCING DEVELOPMENT & SPLICE LENGTHS (GRADE 60)

TYPE	BAR LOCATION	CONCRETE TYPE	CONCRETE STRENGTH	#3 ℓ_d	#3 ℓ_s	#3 ℓ_{dh}	#4 ℓ_d	#4 ℓ_s	#4 ℓ_{dh}	#5 ℓ_d	#5 ℓ_s	#5 ℓ_{dh}	#6 ℓ_d	#6 ℓ_s	#6 ℓ_{dh}	#7 ℓ_d	#7 ℓ_s	#7 ℓ_{dh}	#8 ℓ_d	#8 ℓ_s	#8 ℓ_{dh}	#9 ℓ_d	#9 ℓ_s	#9 ℓ_{dh}	#10 ℓ_d	#10 ℓ_s	#10 ℓ_{dh}	#11 ℓ_d	#11 ℓ_s	#11 ℓ_{dh}
1	VERT. REINF. IN CONC WALL	NWC	fc'≥4ksi	14	18	6	19	25	7	24	31	9	28	37	10	42	54	12	47	62	14	54	70	15	61	79	17	67	87	19
2	HORIZ. REINF. IN CONC. WALL, FTGS., BEAMS, MISC. (SEE NOTE 5)	NWC	fc'≥4ksi	18	24	6	25	32	7	31	40	9	37	48	10	54	70	12	62	80	14	70	91	15	79	102	17	87	113	19
3	SLAB ON GRADE (SEE NOTE 6)	NWC	fc'≥4ksi	14	18	6	19	25	7	24	31	9	28	37	10	42	54	12	47	62	14	54	70	15	61	79	17	67	87	19
4	CONC. ROOF OR FLOOR DIAPHRAGMS	LWC	fc'≥3ksi	23	30	8	30	39	12	37	48	12	44	57	13	65	84	16	74	96	19	83	108	20	93	121	23	104	135	25

NOTES:

1. ℓ_d = DEVELOPMENT

ℓ_s = LAP SPLICE LENGTH

ℓ_{dh} = HOOK DEVELOPMENT LENGTH

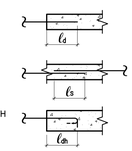

2. THE ABOVE DEVELOPMENT & SPLICE LENGTHS ARE CLASS B & APPLY TO ALL REINF. U.N.O. ON DWGS.
3. FOR NONCONTACT LAP SPLICES AND ALL SPLICES IN SHOTCRETE WALLS, ADD 6" TO THE LENGTHS IN THE TABLE ABOVE.
4. WHEN SPLICING BARS OF DIFFERENT SIZE, USE THE LAP SPLICE LENGTH OF LARGER BAR.
5. TYPE 2 VALUES NOTED HAVE ALREADY BEEN INCREASED BY 1.3, ASSUMING A "TOP BAR" CONDITION.
6. FOR SLABS OR CURBS THICKER THAN 12", THE REBAR LAPS SHALL BE INCREASED TO COMPLY WITH TYPE 2 VALUES.

C415-0 SCALE: NO SCALE

REINFORCING DEVELOPMENT & SPLICE LENGTHS

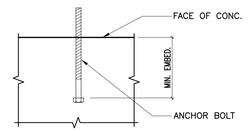

BOLT SIZE	EMBEDMENT FOR CONCRETE U.N.O.	EMBEDMENT FOR CONC. @ SHEAR WALLS
½"	4"	6"
⅝"	5"	7½"
¾"	6"	9"
⅞"	7"	10½"
1"	8"	12"
1⅛"	9"	13½"
1¼"	10"	15"

NOTES:
1. MINIMUM BOLT SPACING SHALL BE 12 BOLT DIAMETERS WITH A MINIMUM EDGE DISTANCE OF 12 DIAMETERS, UNLESS NOTED OTHERWISE.
2. PROVIDE AN ADDITIONAL 2" OF EMBEDMENT FOR ANCHOR BOLTS LOCATED IN THE TOP OF COLUMNS.
3. ANCHOR BOLTS SHALL BE HEX HEADED WITH THE DIMENSIONS OF THE HEX CONFORMING TO ANSI/ASME B18.2.1 BENT BAR ANCHORS SHALL NOT BE USED.

C501-0 SCALE: NO SCALE

CONCRETE ANCHOR BOLT SCHEDULE

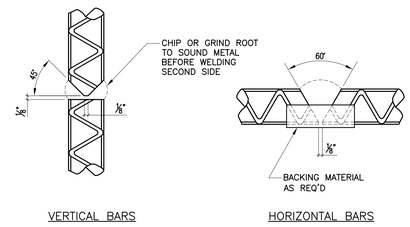

NOTES:
1. A PRE-QUALIFICATION TEST SHALL BE MADE BY AN APPROVED TESTING LABORATORY ON SAMPLES OF EACH SIZE BAR BEING WELDED.
2. WELDING SHALL BE WITH E80XX LOW HYDROGEN ELECTRODES AND SHALL CONFORM TO A.W.S. – D1.4.

C412-0 SCALE: NO SCALE

BUTT WELDED REINFORCING BARS

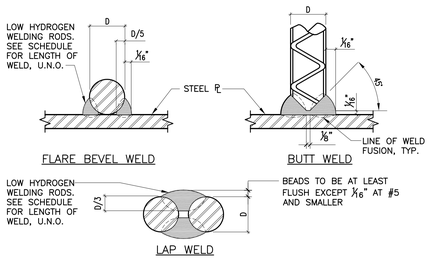

MINIMUM WELD REQUIREMENTS FOR LAP WELDING	
BAR SIZE	WELD LENGTH (EA. SIDE)
#3	2"
#4	2½"
#5	3"
#6	3½"
#7	4"

NOTES:
1. USE (E80XX) LOW HYDROGEN RODS FOR ALL REBAR WELDING.
2. ALL WELDING SHALL BE SUBJECT TO CONTINUOUS INSPECTION.

C413-0 SCALE: NO SCALE

REBAR WELDING

PROJECT No. : 1-30-55
6/21/2022 10:26 AM

DRAWN BY: CHECKED BY:

ISSUE No.____ DATE____ DESCRIPTION____
REVISION No.____ DATE____ DESCRIPTION____

RUHNAUCLARKE.COM
3775 TENTH STREET, RIVERSIDE CALIFORNIA 92501 (951) 684 4664 / 5751 PALMER WAY, SUITE C, CARLSBAD CALIFORNIA 92010 (760) 438 5899

GHS KITCHEN & WEIGHTROOM MOD
GROSSMONT HIGH SCHOOL
1100 MURRAY DR, EL CAJON, CA 92020
GROSSMONT UNION HIGH SCHOOL

TYPICAL CONCRETE DETAILS

S0-1.2

1-30-55

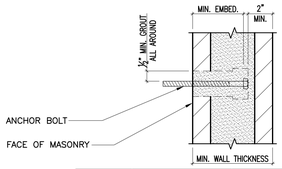

BOLT SIZE	MINIMUM EMBEDMENT	MINIMUM WALL THICKNESS
1/2"	4"	8"
5/8"	5"	8"
3/4"	6"	12"
7/8"	7"	12"
1"	8"	16"
1 1/8"	9"	16"
1 1/4"	10"	16"

NOTES:
1. MINIMUM BOLT SPACING SHALL BE 16 BOLT DIAMETERS WITH A MINIMUM EDGE DISTANCE OF 12 DIAMETERS, UNLESS NOTED OTHERWISE.
2. PROVIDE AN ADDITIONAL 2" OF EMBEDMENT FOR ANCHOR BOLTS LOCATED IN THE TOP OF COLUMNS, WALLS & PILASTERS.
3. ANCHOR BOLTS SHALL BE HEX HEADED WITH THE DIMENSIONS OF THE HEX CONFORMING TO ANSI/ASME B18.2.1 BENT BAR ANCHORS SHALL NOT BE USED.

M114-0 SCALE: NO SCALE

13 MASONRY ANCHOR BOLT SCHEDULE

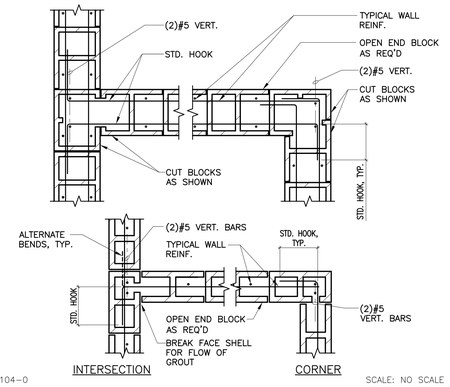

M104-0 SCALE: NO SCALE

9 CONC. MAS. WALL INTERSECTIONS

STAMPS

IDENTIFICATION STAMP
DIV. OF THE STATE ARCHITECT
APP: 04-120895 INC:
REVIEWED FOR
SS ☑ FLS ☑ ACS ☑
DATE: 06/27/2022

KNA STRUCTURAL ENGINEERS
9931 Muirlands Boulevard, Irvine, CA 92618
WWW.KNAstructural.com

KNA JOB NO: 203.654
CONSULTANT BRANDING

RUHNAU CLARKE ARCHITECTS

17

FREESTANDING CMU WALL REINFORCING SCHEDULE						
H	W	D	(A)	(B) *	(C)	WALL THICKNESS (NOMINAL)
1'-0" TO 2'-0"	1'-6"	12	#5 @ 24" O.C.	#5 @ 24" O.C.	–	8"
2'-1" TO 3'-0"	2'-0"	12	#5 @ 24" O.C.	#5 @ 24" O.C.	–	8"
3'-1" TO 4'-0"	2'-6"	12	#5 @ 24" O.C.	#5 @ 24" O.C.	#5 @ 24" O.C.	8"
4'-1" TO 5'-0"	2'-6"	12	#5 @ 24" O.C.	#5 @ 24" O.C.	#5 @ 24" O.C.	8"
5'-1" TO 6'-0"	3'-0"	12	#5 @ 24" O.C.	#5 @ 24" O.C.	#5 @ 24" O.C.	8"
6'-1" TO 7'-0"	3'-6"	12	#5 @ 24" O.C.	#5 @ 24" O.C.	#5 @ 24" O.C.	8"
7'-1" TO 8'-0"	4'-0"	12	#5 @ 24" O.C.	#5 @ 24" O.C.	#5 @ 24" O.C.	8"
8'-1" TO 9'-0"	4'-6"	18	#5 @ 24" O.C.	#5 @ 16" O.C.	#5 @ 16" O.C.	8"
9'-1" TO 10'-0"	5'-6"	24	#5 E.F. @ 24" O.C.	#5 E.F. @ 24" O.C.	#5 @ 16" O.C.	12"
10'-1" TO 11'-0"	6'-0"	24	#5 E.F. @ 24" O.C.	#5 E.F. @ 16" O.C.	#6 @ 16" O.C.	12"

* SPACE VERTICAL REINFORCING @ 16" O.C. WHERE STACK BOND PATTERN OCCURS.

M108-0

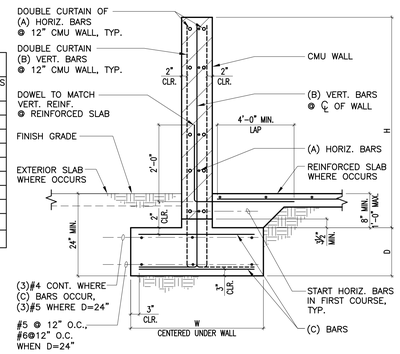

SCALE: NO SCALE

18 FREESTANDING CMU WALL SCHEDULE

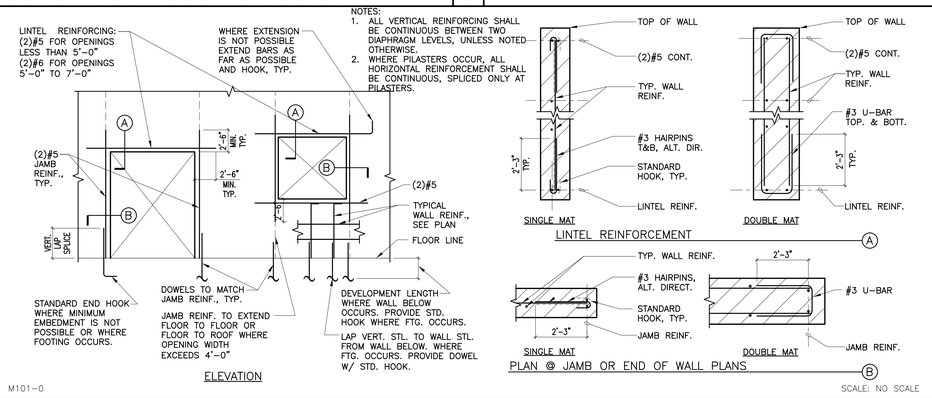

NOTES:
1. ALL VERTICAL REINFORCING SHALL BE CONTINUOUS BETWEEN TWO DIAPHRAGM LEVELS, UNLESS NOTED OTHERWISE.
2. WHERE PILASTERS OCCUR, ALL HORIZONTAL REINFORCEMENT SHALL BE CONTINUOUS, SPLICED ONLY AT PILASTERS.

M101-0 SCALE: NO SCALE

10 MINIMUM REINFORCING AT CONCRETE MASONRY WALL OPENINGS

1

19

15 TYP. CONTROL JOINT IN FREESTANDING CMU WALL

11

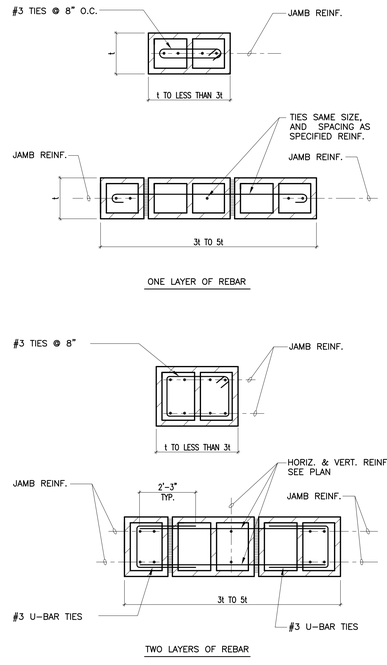

NOTE:
TIES MAY BE TURNED UP AS NECESSARY TO FIT INSIDE WALL. BREAK WEBS AND/OR INTERIOR FACE SHELL AS REQUIRED.

M111-0 SCALE: NO SCALE

8 CONCRETE MASONRY WALL PIERS

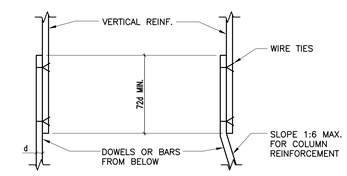

NOTES:
1. ALL VERTICAL REINFORCING FOR COLUMN, PIERS AND WALLS SHALL BE DOWELED AS SHOWN, UNLESS NOTED OTHERWISE.
2. DOWELS SHALL BE THE SAME GRADE, SIZE, QUANTITY AND/OR SPACING AS VERTICAL REINFORCING.
3. WHERE VERT. BARS OF DIFFERENT SIZE ARE BEING LAPPED, LAP LENGTH SHALL BE BASED UPON SMALLER BAR DIAMETER.

M102-0 SCALE: NO SCALE

2 VERT. REINF. LAP SPLICE-MASONRY

20

16

12

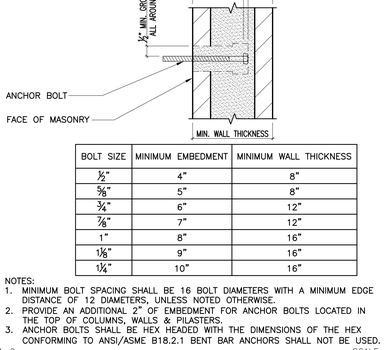

NOTES:
1. MAXIMUM SPACING OF JOINTS SHALL BE 24'-0" O.C.
2. COORDINATE LOCATION OF JOINTS WITH ARCHITECTURAL DRAWINGS.

M109-0 SCALE: NO SCALE

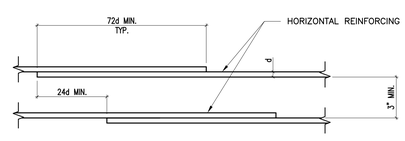

NOTES:
1. CONTRACTOR MAY AT HIS OPTION USE A BUTT WELDED SPLICE IN LIEU OF LAP.
2. WHERE HORIZ. BARS OF DIFFERENT SIZE ARE BEING LAPPED, LAP LENGTH SHALL BE BASED UPON SMALLER BAR DIAMETER.

M103-0 SCALE: NO SCALE

3 HORIZ. REINF. LAP SPLICE - MASONRY

PROJECT No. : 1-30-55
6/21/2022 10:26 AM

DRAWN BY: CHECKED BY:
STEEL DETAILS

ISSUE No.___ DATE___ DESCRIPTION___
REVISION No.___ DATE___ DESCRIPTION___

RUHNAUCLARKE.COM
3775 TENTH STREET, RIVERSIDE CALIFORNIA 92501 (951) 684 4664 / 5751 PALMER WAY, SUITE C, CARLSBAD CALIFORNIA 92010 (760) 438 5899

GHS KITCHEN & WEIGHTROOM MOD
GROSSMONT HIGH SCHOOL
1100 MURRAY DR, EL CAJON, CA 92020
GROSSMONT UNION HIGH SCHOOL

TYPICAL MASONRY DETAILS

S0-1.3

1-30-55

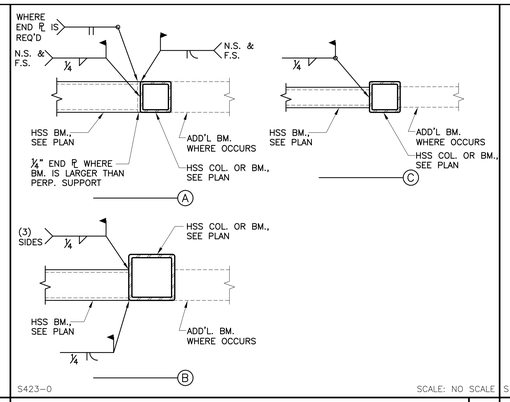

S423-0 SCALE: NO SCALE

17	13	TYP. HSS CONNECTION	9

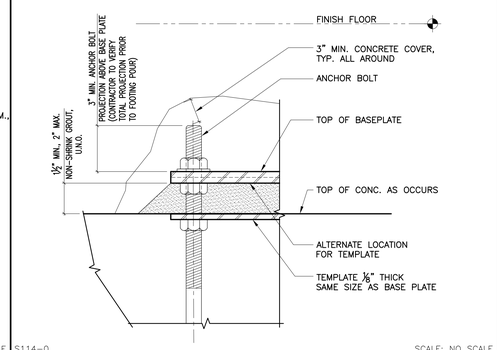

S114-0 SCALE: NO SCALE

5

REGISTERED PROFESSIONAL ENGINEER — JOHN C. KAPP — No. 2795 Exp. 9-30-23 — STRUCTURAL — STATE OF CALIFORNIA

LICENSED ARCHITECT — ROGER CLARKE — No. C-21340 Exp. 10-31-23 — STATE OF CALIFORNIA

STAMPS

IDENTIFICATION STAMP
DIV. OF THE STATE ARCHITECT
APP: 04-120895 INC:
REVIEWED FOR
SS ☑ FLS ☑ ACS ☑
DATE: 06/27/2022
AGENCY USE ONLY
File No:37:n4 A04-120895

KNA STRUCTURAL ENGINEERS
9931 Muirlands Boulevard, Irvine, CA 92618
WWW.KNAstructural.com
KNA JOB NO: 203.654
CONSULTANT BRANDING

RUHNAU CLARKE ARCHITECTS

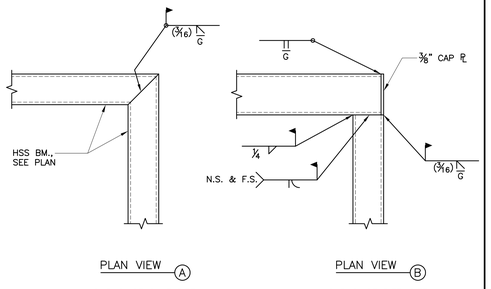

GHS-014 SCALE: 1"=1'-0"

18	14	HSS @ CORNER	10

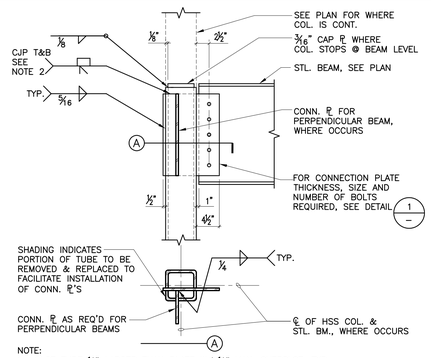

NOTE:
1. SLOT TUBE ⅛" LARGER THAN PLATE W/ ¼" MAX. OVERSLOT, TYP.
2. U.T. INSPECTION OF CJP WELD NOT REQ'D.

S116-0 SCALE: 1"=1'-0"

6

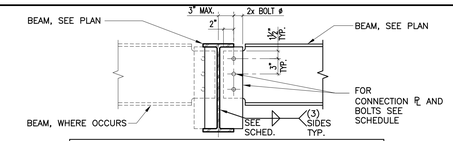

BEAM TO BEAM CONNECTION SCHEDULE				
BEAM DEPTH	CONN. PL THICKNESS	NO. AND ø OF HS BOLTS (A325N)	WELD SIZE	REMARKS
W8	¼"	(2)¾"	5/16"	
W10	¼"	(2)⅞"	5/16"	
W12 – W14	¼"	(3)⅞"	¼"	
W16	⅜"	(4)⅞"	¼"	
W18 – W21	⅜"	(5)⅞"	5/16"	
W24	⅜"	(6)⅞"	5/16"	
W27	½"	(7)⅞"	5/16"	
W30	½"	(8)⅞"	5/16"	
W33	½"	(9)⅞"	⅜"	
W36	½"	(10)⅞"	⅜"	

NOTES:
1. FILLET WELD SHALL BE AS SHOWN, UNLESS A GREATER SIZE IS REQUIRED BY THE MANUAL OF STEEL CONSTRUCTION, BY THE AMERICAN INSTITUTE OF STEEL CONSTRUCTION, CHAPTER J, SEC. J2, TABLE J2.4.
2. HORIZONTAL SHORT SLOTTED HOLES OPTIONAL, EXCEPT NOT ALLOWED AT A325SC DESIGNATED CONNECTIONS ON PLAN
3. PROVIDE A325SC GRADE BOLTS WHERE INDICATED BY ROOF FRAMING PLAN & LEGEND.

S101-0 SCALE: NO SCALE

1

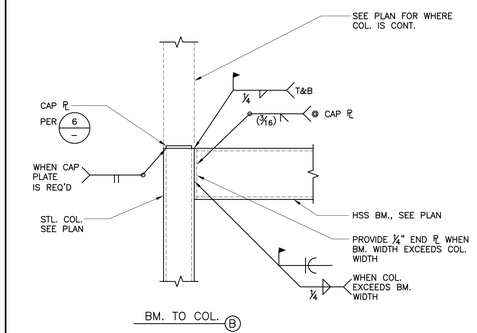

S202-0 SCALE: 1"=1'-0"

19	15	11	HSS BM. CONNECTIONS	7

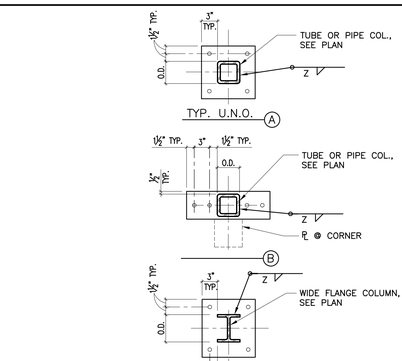

BASE PL SCHEDULE		
MEMBER SIZE O.D.	PL THICKNESS	WELD Z
4" OR LESS	⅝"	¼"
GREATER THAN 4" TO 6"	¾"	¼"
GREATER THAN 6"	1"	5/16"

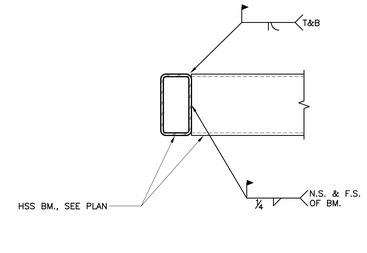

S207-0 SCALE: 1"=1'-0"

20	16	12	HSS BEAM CONNECTION (EXPOSED)	8

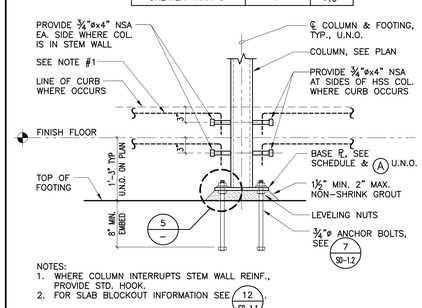

NOTES:
1. WHERE COLUMN INTERRUPTS STEM WALL REINF., PROVIDE STD. HOOK.
2. FOR SLAB BLOCKOUT INFORMATION SEE 12 S0-1.1

S111-0 SCALE: NO SCALE

3

PROJECT No. : 1-30-55
6/21/2022 10:26 AM

DRAWN BY: CHECKED BY:
STEEL DETAILS

ISSUE No.	DATE	DESCRIPTION	REVISION No.	DATE	DESCRIPTION
ISSUE No.	DATE	DESCRIPTION	REVISION No.	DATE	DESCRIPTION
ISSUE No.	DATE	DESCRIPTION	REVISION No.	DATE	DESCRIPTION
ISSUE No.	DATE	DESCRIPTION	REVISION No.	DATE	DESCRIPTION

RUHNAUCLARKE.COM
3775 TENTH STREET, RIVERSIDE CALIFORNIA 92501 (951) 684 4664 / 5751 PALMER WAY, SUITE C, CARLSBAD CALIFORNIA 92010 (760) 438 5899

GHS KITCHEN & WEIGHTROOM MOD
GROSSMONT HIGH SCHOOL
1100 MURRAY DR, EL CAJON, CA 92020
GROSSMONT UNION HIGH SCHOOL

TYPICAL STEEL DETAILS

S0-1.4

1-30-55

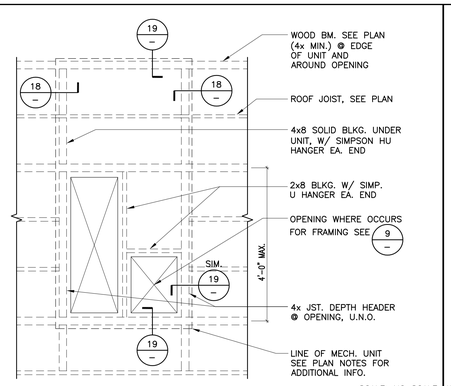

W120-0 SCALE: NO SCALE

ROOF FRAMING AT MECHANICAL UNIT | 17

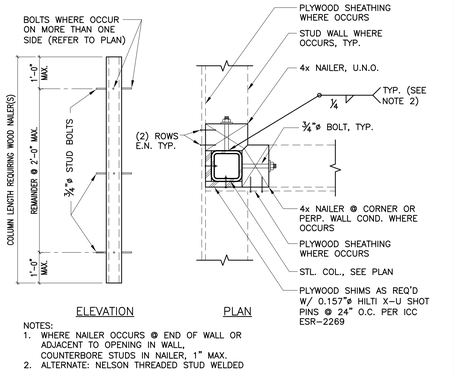

NOTES:
1. WHERE NAILER OCCURS @ END OF WALL OR ADJACENT TO OPENING IN WALL, COUNTERBORE STUDS IN NAILER, 1" MAX.
2. ALTERNATE: NELSON THREADED STUD WELDED

W116-0 SCALE: NO SCALE

WOOD NAILERS TO STEEL COLUMNS | 13

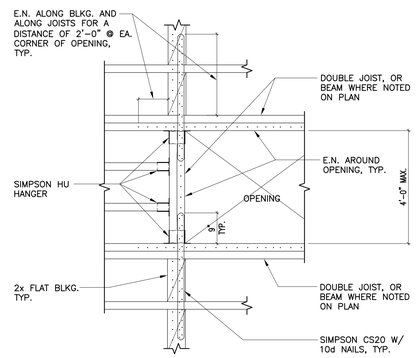

W111-0 SCALE: NO SCALE

OPENING IN HORIZ. WOOD FRAMING | 9

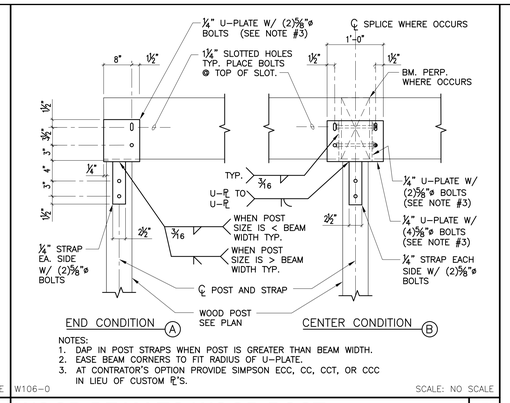

NOTES:
1. DAP IN POST STRAPS WHEN POST IS GREATER THAN BEAM WIDTH.
2. EASE BEAM CORNERS TO FIT RADIUS OF U-PLATE.
3. AT CONTRATOR'S OPTION PROVIDE SIMPSON ECC, CC, CCT, OR CCC IN LIEU OF CUSTOM ℄'S.

W106-0 SCALE: NO SCALE

WOOD BEAM TO WOOD POST | 5

STAMPS

IDENTIFICATION STAMP
DIV. OF THE STATE ARCHITECT
APP: 04-120895 INC:
REVIEWED FOR
SS ☑ FLS ☑ ACS ☑
DATE: 06/27/2022

KNA STRUCTURAL ENGINEERS
9931 Muirlands Boulevard, Irvine, CA 92618
WWW.KNAstructural.com

KNA JOB NO: 203.654
CONSULTANT BRANDING

RUHNAU CLARKE ARCHITECTS

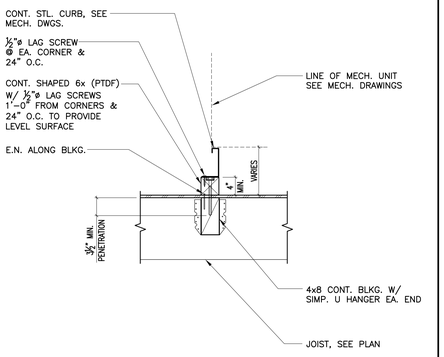

W418-0 SCALE: NO SCALE

EQUIPMENT SUPPORT PERPENDICULAR TO ROOF JOISTS | 18

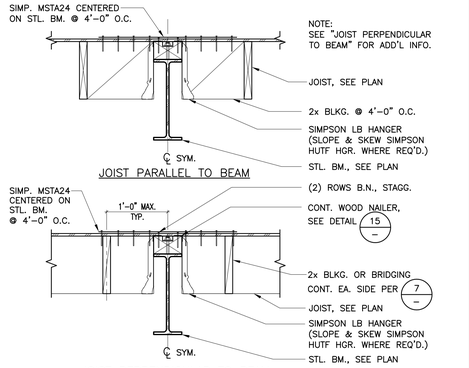

W117-0 SCALE: NO SCALE

JOIST TO STEEL BEAMS | 14

BOLT SIZE	MALLEABLE IRON WASHER	STEEL PLATE WASHER	SIMPSON PRODUCT
½"ø	¼x2½"ø	¼"x4½"x3"	BPS½-6
⅝"ø	5/16x2½"ø	¼"x4½"x3"	BPS⅝-6
¾"ø	⅜x3"ø	5/16"x4½"x3"	BPS¾-6
⅞"ø	7/16x3½"ø	⅜"x3½"x3½"	BP⅞
1"ø	½"x4"ø	7/16"x4"x4"	BP1

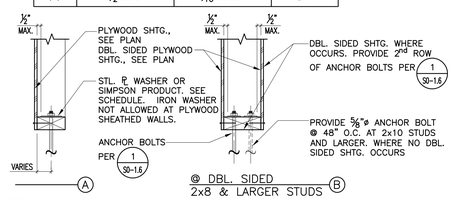

NOTE:
PROVIDE STANDARD CUT WASHERS UNDER ALL HEADS AND NUTS BEARING ON WOOD EXCEPT WHERE SPECIFICALLY NOTED ON DRAWINGS.

W112-0 SCALE: NO SCALE

WOOD FRAMING WASHER SCHEDULE | 10

LINTEL SCHEDULE	
SPAN	D
UP TO 6'-0"	5½"
6'-1" TO 8'-0"	7¼"
8'-1" TO 10'-0"	9¼"
10'-1" TO 12'-0"	11¼"

NOTE:
FOR SPAN OVER 12'-0", SEE PLAN FOR INFORMATION.

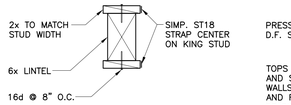

HDR. IN 2x8 AND LARGER STUD WALL

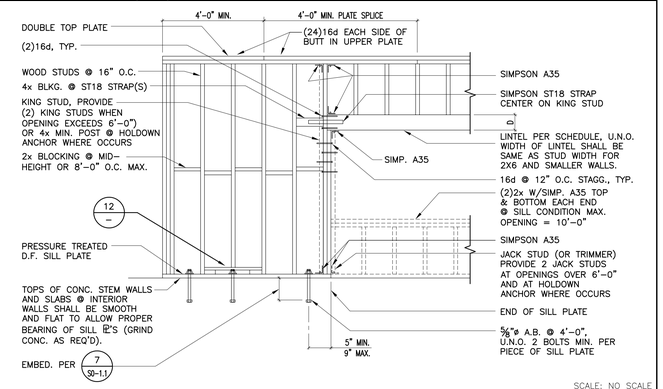

W101-0 SCALE: NO SCALE

WOOD STUD WALL FRAMING | 1

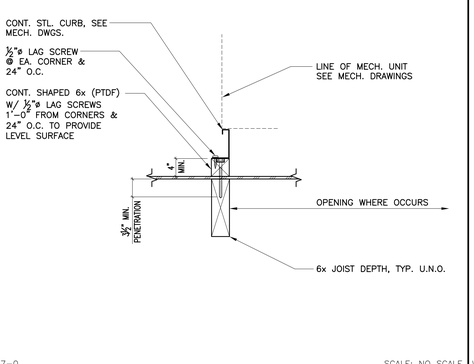

W417-0 SCALE: NO SCALE

EQUIPMENT SUPPORT PARALLEL TO ROOF JOISTS | 19

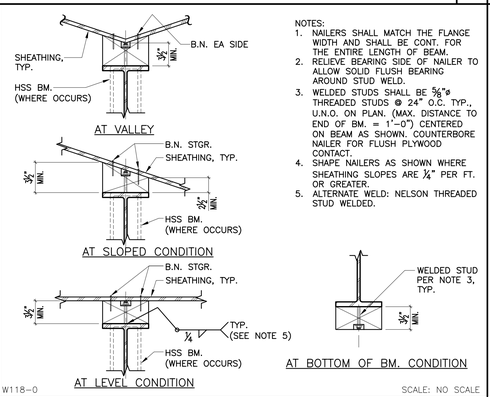

NOTES:
1. NAILERS SHALL MATCH THE FLANGE WIDTH AND SHALL BE CONT. FOR THE ENTIRE LENGTH OF BEAM.
2. RELIEVE BEARING SIDE OF NAILER TO ALLOW SOLID FLUSH BEARING AROUND STUD WELD.
3. WELDED STUDS SHALL BE ⅝"ø THREADED STUDS @ 24" O.C. TYP., U.N.O. ON PLAN. (MAX. DISTANCE TO END OF BM. = 1'-0") CENTERED ON BEAM AS SHOWN. COUNTERBORE NAILER FOR FLUSH PLYWOOD CONTACT.
4. SHAPE NAILERS AS SHOWN WHERE SHEATHING SLOPES ARE ¼" PER FT. OR GREATER.
5. ALTERNATE WELD: NELSON THREADED STUD WELDED.

W118-0 SCALE: NO SCALE

STEEL BEAM NAILERS | 15

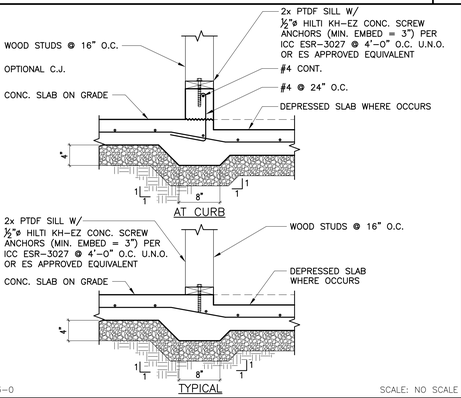

W113-0 SCALE: NO SCALE

WOOD STUD PARTITION BOTTOM (NON-BEARING) | 11

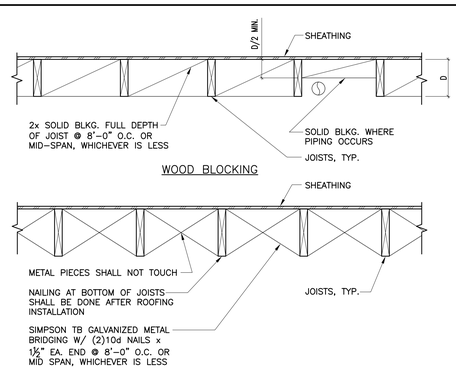

W110-0 SCALE: NO SCALE

WOOD JOIST BRIDGING | 7

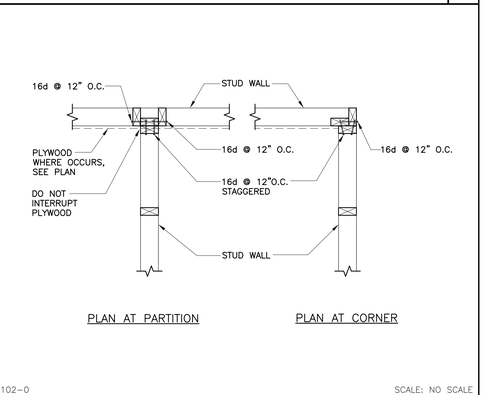

W102-0 SCALE: NO SCALE

WOOD STUD WALL INTERSECTIONS | 2

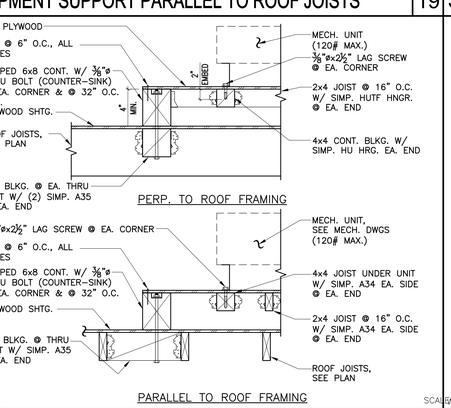

W921-0 SCALE: NO SCALE

EQUIPMENT LEVEL PLATFORM (COND. UNIT) | 20

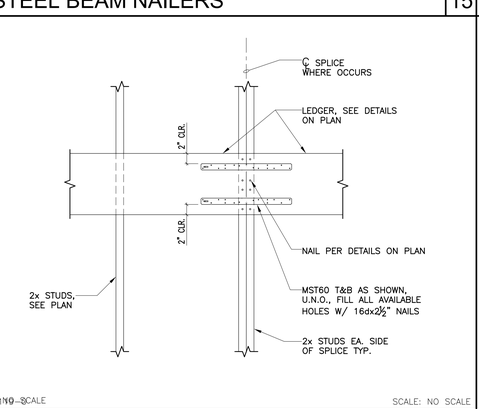

W110-0 SCALE: NO SCALE

TYPICAL LEDGER SPLICE | 16

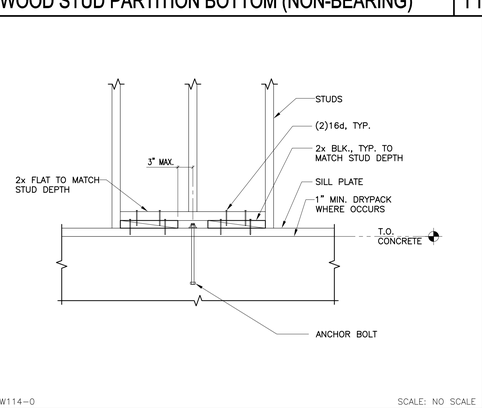

W114-0 SCALE: NO SCALE

ANCHOR BOLT AT WOOD STUD | 12

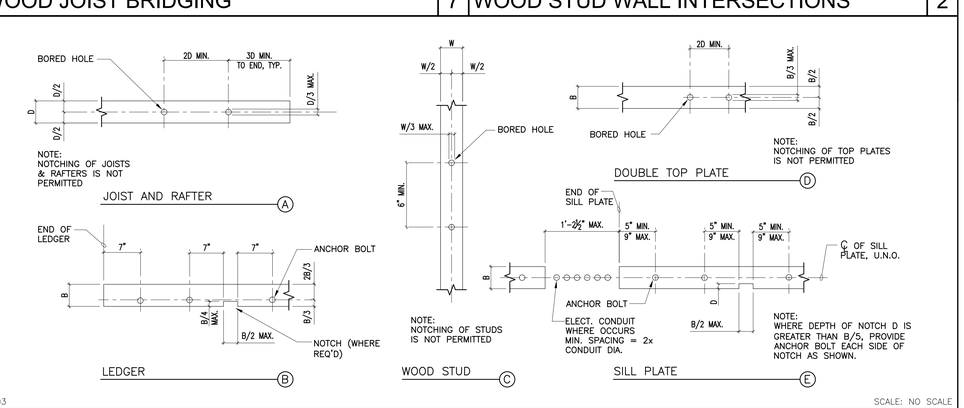

W103 SCALE: NO SCALE

WOOD FRAMING HOLES AND NOTCHING | 3

PROJECT No. : 1-30-55
6/21/2022 10:26 AM

DRAWN BY: CHECKED BY:

ISSUE No.	DATE	DESCRIPTION	REVISION No.	DATE	DESCRIPTION
ISSUE No.	DATE	DESCRIPTION	REVISION No.	DATE	DESCRIPTION
ISSUE No.	DATE	DESCRIPTION	REVISION No.	DATE	DESCRIPTION
ISSUE No.	DATE	DESCRIPTION	REVISION No.	DATE	DESCRIPTION

STEEL DETAILS

RUHNAUCLARKE.COM
3775 TENTH STREET, RIVERSIDE CALIFORNIA 92501 (951) 684 4664 / 5751 PALMER WAY, SUITE C, CARLSBAD CALIFORNIA 92010 (760) 438 5899

GHS KITCHEN & WEIGHTROOM MOD
GROSSMONT HIGH SCHOOL
1100 MURRAY DR, EL CAJON, CA 92020
GROSSMONT UNION HIGH SCHOOL

TYPICAL WOOD DETAILS

S0-1.5

1-30-55

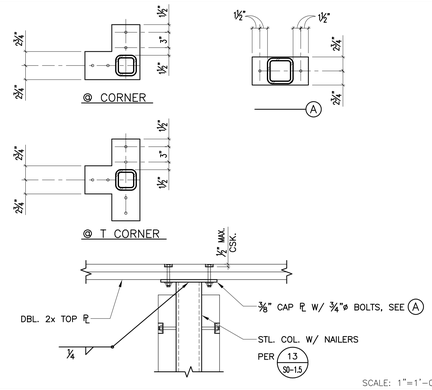

17 HSS COL. TO TOP PLATE CONN.

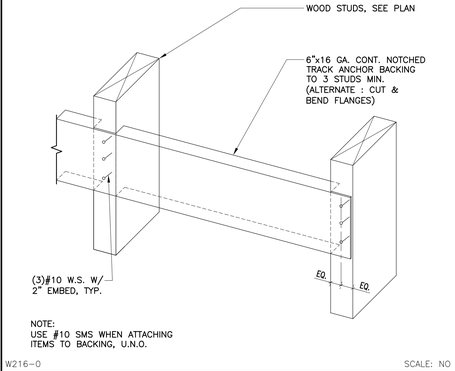

13 BACKING AT WOOD STUDS

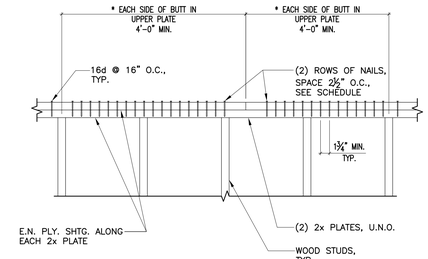

MARK	16d NAILS *	REMARKS
C	24	TYP., U.N.O. ON PLAN
D	30	
E	36	

5 TOP PLATE SPLICE

STAMPS

IDENTIFICATION STAMP
DIV. OF THE STATE ARCHITECT
APP: 04-120895 INC:
REVIEWED FOR
SS ☑ FLS ☑ ACS ☑
DATE: 06/27/2022
File No:37.n4 A04-120895

KNA STRUCTURAL ENGINEERS
9931 Muirlands Boulevard, Irvine, CA 92618
WWW.KNAstructural.com
KNA JOB NO: 203.654
CONSULTANT BRANDING

RUHNAU CLARKE ARCHITECTS

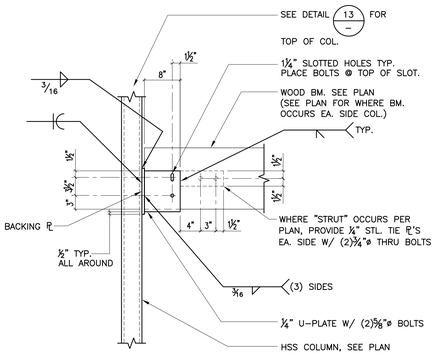

18 WOOD BEAM TO STEEL COLUMN

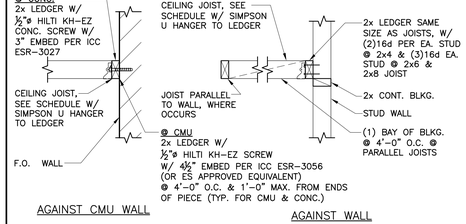

CEILING JOIST SCHEDULE	
JOIST SIZE	MAX. SPAN
2x4 @ 16" O.C.	9'-0"
2x6 @ 16" O.C.	14'-0"
2x8 @ 16" O.C.	18'-0"

NOTE:
1. THIS DETAIL IS INTENDED FOR CEILING JOISTS THAT SPAN FROM WALL TO WALL @ CONTRACTORS OPTION.
2. PROVIDE 2x FULL DEPTH BLKG @ 8'-0" O.C. MAX. OR MID-SPAN, WHICHEVER IS LESS

W212-0
SCALE: NO SCALE

14 CEILING INTERIOR JOIST SCHEDULE & DETAIL

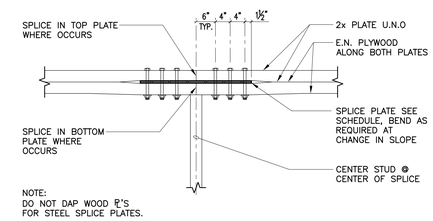

MARK	NO. OF BOLTS EACH SIDE	SPLICE PLATE
F	(2)¾"ø	¼"x5"
G	(3)¾"ø	¼"x5"
H	(4)¾"ø	⅜"x5"
J	(5)¾"ø	⅜"x5"

W209-0
SCALE: NO SCALE

6 TOP PLATE SPLICE

NOTES:
1. EDGE NAILING (E.N.), SEE SCHEDULE.
2. INTERMEDIATE NAILING @ 12", SAME SIZE AS E.N.
3. E.N. ALONG POST WHERE HOLDDOWN ANCHOR OCCURS.
4. EDGE DISTANCE FOR NAILS SHALL BE ⅜" FOR 2x MEMBERS & ½" FOR 3x MEMBERS.
5. PLYWOOD MAY BE INSTALLED HORIZONTALLY OR VERTICALLY, STAGGERED JOINTS.
6. SEE PLAN FOR LOCATION OF PLYWOOD SHEATHING.
7. EXTEND PLYWOOD FOR FULL LENGTH OF WALL ABOVE DOORS AND AROUND WINDOWS.
8. MINIMUM PLYWOOD WIDTH SHALL BE 12".
9. PROVIDE 3x STUDS AT SPLICE OF SHEETS AT WALLS DESIGNATED BY *.
10. STAGGER E.N. ALONG ADJOINING PANEL EDGES. SILL BOLTS SHALL HAVE PLATE WASHERS PER 10 / S9-15 & EMBED PER 7 / S9-12

SHEATHED WALL SCHEDULE				
MARK	THICKNESS	E.N.	SILL BOLTS	
A	15/32"	10d @ 6"	⅝" @ 40"	
* B	15/32"	10d @ 4"	⅝" @ 28"	
* C	15/32"	10d @ 3"	⅝" @ 24"	
* D	15/32" EA. SIDE	10d @ 6"	⅝" @ 20"	
* E	15/32"	10d @ 2"	⅝" @ 16"	
* F	15/32" EA. SIDE	10d @ 4"	⅝" @ 16"	

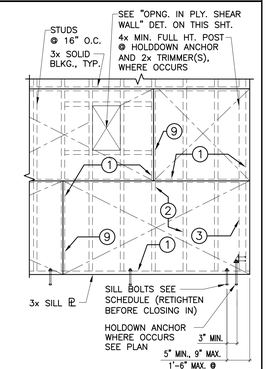

1 PLYWOOD SHEATHING - WALLS

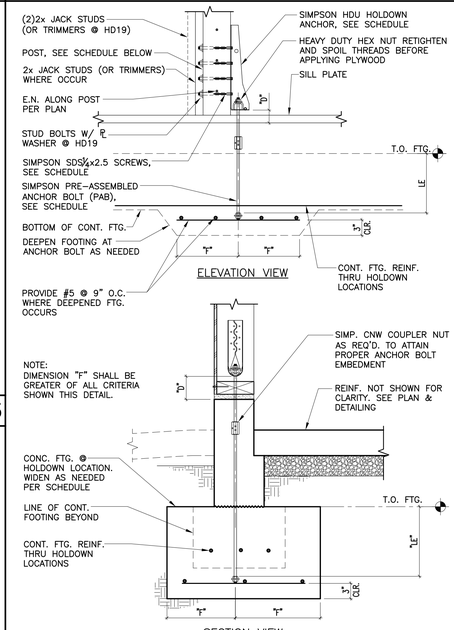

SCREW & BOLT SCHEDULE							
HOLDOWN	# OF SIMPSON SDS¼"x 2½" SCREWS U.N.O.	MIN. POST	"LE"	PAB SIZE	"F"	"D"
HDU2-SDS2.5	6	4x STUD DEPTH	6½"	PAB5 ⅝"ø	10"	5"
HDU4-SDS2.5	10	4x STUD DEPTH	6½"	PAB5 ⅝"ø	10"	5"
HDU5-SDS2.5	14	4x STUD DEPTH	6½"	PAB5 ⅝"ø	10"	5"
HDU8-SDS2.5	20	6x STUD DEPTH	9"	PAB7 ⅞"ø	13½"	7"
HDU11-SDS2.5	30	6x STUD DEPTH	11"	PAB8 1"ø	16½"	8"
HDU14-SDS2.5	36	6x STUD DEPTH	11"	PAB8 1"ø	16½"	8"
HD19	(5)1"ø STUD BOLTS	6x STUD DEPTH	14½"	PAB10 1¼"ø	22"	10"

W215-0
SCALE: NO SCALE

12 HOLDOWN ANCHORS

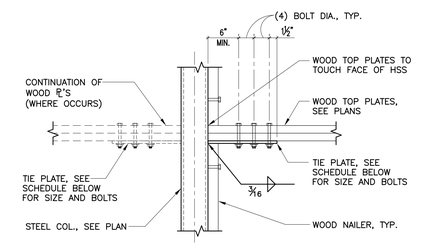

TIE PLATE SCHEDULE			
MARK	TIE PLATE	BOLTS	REMARKS
A	¼"x5"	(2)¾"ø	
B	¼"x5"	(3)¾"ø	
C	⅜"x5"	(4)¾"ø	
D	⅜"x5"	(5)¾"ø	

W210-0
SCALE: NO SCALE

7 TIE PLATE CONN. AND SCHEDULE

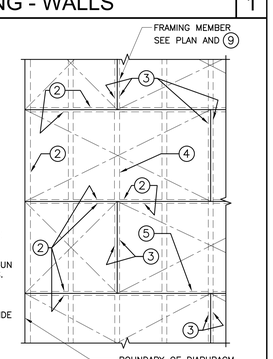

NOTES:
1. SEE PLAN FOR PLYWOOD THICKNESS, GRADE, AND NAILING.
2. BOUNDARY NAILING (B.N.).
3. EDGE NAILING (E.N.).
4. INTERMEDIATE NAILING (SPACE 12" O.C. @ ROOFS AND 10" O.C. @ FLOORS).
5. 3x4 FLAT BLOCKING, U.N.O.
6. MIN. SIZE OF PLYWOOD SHEET SHALL BE 2'-0"x4'-0".
7. LONG DIMENSION OF PLYWOOD SHALL RUN PERPENDICULAR TO TYPICAL JOIST SPANS.
8. NAILS SHALL HAVE ⅜" MIN. PLYWOOD EDGE DISTANCE AND SHALL NOT BE OVERDRIVEN THROUGH OUTER PLY. PROVIDE ⅛" GAP BETWEEN PLYWOOD EDGES.
9. WHEN NAILS ARE SPACED 3" OR LESS: FRAMING AND BLOCKING @ ADJOINING PANEL EDGES SHALL BE 3-INCH NOMINAL OR WIDER AND NAILS SHALL BE STAGGERED.

W202-0
SCALE: NO SCALE

2 HORIZONTAL PLYWOOD SHEATHING

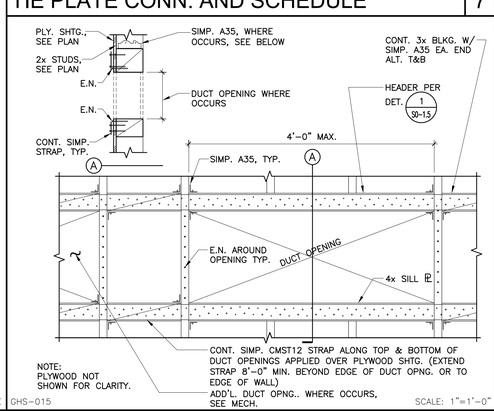

8 OPENING IN PLYWOOD SHEARWALL

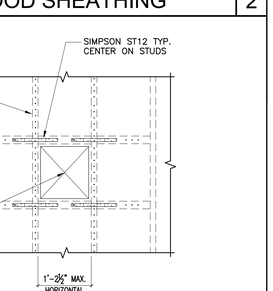

NOTES:
1. DO NOT CUT STUDS UNLESS SPECIFICALLY DETAILED.
2. MAX. VERT. DIMENSION = 2x HORIZONTAL DIMENSION.
3. IF OPENINGS LINE UP HORIZONTALLY, NO MORE THAN ONE OPENING IN EVERY TEN STUD SPACES IS PERMITTED.

W204-0
SCALE: NO SCALE

3 OPENING IN PLYWOOD SHEAR WALL

PROJECT No. : 1-30-55
6/21/2022 10:27 AM

DRAWN BY: CHECKED BY:
STEEL DETAILS

ISSUE No.	DATE	DESCRIPTION	REVISION No.	DATE	DESCRIPTION
ISSUE No.	DATE	DESCRIPTION	REVISION No.	DATE	DESCRIPTION
ISSUE No.	DATE	DESCRIPTION	REVISION No.	DATE	DESCRIPTION
ISSUE No.	DATE	DESCRIPTION	REVISION No.	DATE	DESCRIPTION

RUHNAUCLARKE.COM
3775 TENTH STREET, RIVERSIDE CALIFORNIA 92501 (951) 684 4664 / 5751 PALMER WAY, SUITE C, CARLSBAD CALIFORNIA 92010 (760) 438 5899

GHS KITCHEN & WEIGHTROOM MOD
GROSSMONT HIGH SCHOOL
1100 MURRAY DR., EL CAJON, CA 92020
GROSSMONT UNION HIGH SCHOOL

TYPICAL WOOD DETAILS

S0-1.6

1-30-55

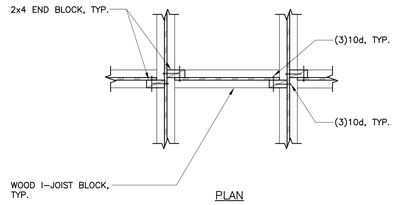

PLAN

W405-0 SCALE: NO SCALE

WOOD I-JOIST BLOCKING PANEL 17

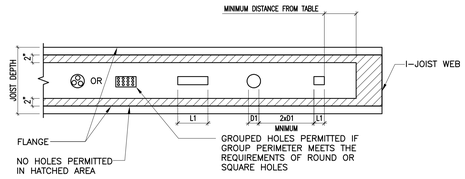

SUGGESTED SIZE & LOCATION OF HOLES

NOTES:
1. HOLES MAY BE CUT IN WEB FOR ELECTRICAL, PLUMBING OR HVAC DUCTS.
2. THE MAXIMUM ALLOWABLE SIZE OF HOLE THRU THE I-JOIST WEB MAY INCREASE AS THE DISTANCE FROM THE SUPPORT INCREASES. SEE DIAGRAM ABOVE.
3. ROUND HOLES: FOR SIMPLE SPANS AND UNIFORM LOADS, USE THE DIAGRAM TO DETERMINE ALLOWABLE HOLE SIZES.
4. HOLES TO BE CUT IN WEB OF WOOD I-JOIST SHALL COMPLY WITH JOIST MANUFACTURER (REDBUILT) ICC REPORT'S RECOMMENDATIONS AND OBTAIN APPROVAL FROM ENGINEER OF RECORD BEFORE CUTTING.
5. DETERMINE THE HOLE SHAPE AND SIZE. FOR RECTANGULAR HOLES, USE THE LARGEST DIMENSION PER TABLE.

TABLE: END SUPPORT OR SIMPLE SPAN

JOIST DEPTH	JOIST SERIES	MINIMUM DISTANCE FROM EDGE OF HOLE TO INSIDE FACE OF NEAREST SUPPORT						
		ROUND HOLE SIZE						
		2"	4"	6"	8"	10"	12"	14"
		SQUARE OR RECTANGULAR HOLE SIZE						
		1.25"	2.5"	4"	5"	6"	7"	8.5"
11⅞"	165	1'-6"	3'-0"	4'-6"	6'-6"	NOT ALLOWED	NOT ALLOWED	NOT ALLOWED
14"	165	1'-0"	2'-6"	4'-0"	5'-6"	8'-0"	NOT ALLOWED	NOT ALLOWED
16"	165	1'-0"	1'-6"	3'-0"	4'-0"	5'-0"	8'-0"	NOT ALLOWED
18"	165	1'-0"	1'-0"	2'-6"	3'-6"	4'-6"	6'-0"	9'-0"
20"	165	1'-0"	1'-0"	2'-0"	3'-0"	4'-0"	5'-0"	7'-0"
22"	165	1'-0"	1'-0"	1'-6"	2'-6"	3'-6"	4'-6"	5'-6"
24"	165	1'-0"	1'-6"	2'-6"	3'-6"	4'-0"	5'-0"	6'-0"

TABLE: END SUPPORT OR SIMPLE SPAN

JOIST DEPTH	JOIST SERIES	MINIMUM DISTANCE FROM EDGE OF HOLE TO INSIDE FACE OF NEAREST SUPPORT						
		ROUND HOLE SIZE						
		2"	4"	6"	8"	10"	12"	14"
		SQUARE OR RECTANGULAR HOLE SIZE						
		1.25"	2.5"	4"	5"	6"	7"	8.5"
11⅞"	190	1'-6"	3'-6"	5'-6"	7'-0"	NOT ALLOWED	NOT ALLOWED	NOT ALLOWED
14"	190	1'-0"	3'-0"	5'-0"	6'-6"	9'-0"	NOT ALLOWED	NOT ALLOWED
16"	190	1'-0"	2'-0"	4'-0"	6'-0"	8'-6"	10'-6"	NOT ALLOWED
18"	190	1'-0"	1'-0"	2'-6"	5'-0"	7'-0"	9'-6"	12'-6"
20"	190	1'-0"	1'-0"	2'-0"	4'-0"	6'-0"	8'-0"	11'-0"
22"	190	1'-0"	1'-0"	1'-0"	3'-0"	5'-0"	7'-0"	9'-0"
24"	190	1'-0"	1'-0"	2'-0"	3'-6"	5'-0"	6'-6"	8'-6"

W408-0 SCALE: NO SCALE

HOLES IN WOOD I-JOIST 9

MANUFACTURER	SERIES	FLANGE MATERIAL	WEB MATERIAL
REBUILT	RED I-65	LAMINATED VENEER LUMBER (LVL)	7/16" OSB

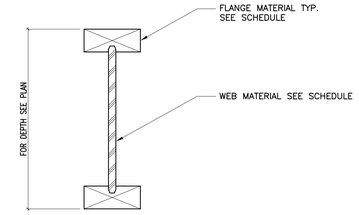

NOTES:
1. JOISTS SHALL BE MANUFACTURED BY REDBUILT (ICC ESR-2994).
2. SEE SHEET S-0.2 FOR ADDITIONAL NOTES.

W404-0 SCALE: NO SCALE

TYPICAL WOOD I-JOIST 5

REGISTERED PROFESSIONAL ENGINEER — No. 2795 Exp. 9-30-23 — STRUCTURAL — STATE OF CALIFORNIA

LICENSED ARCHITECT — No. C-21340 Exp. 10-31-23 — STATE OF CALIFORNIA

STAMPS

IDENTIFICATION STAMP
DIV. OF THE STATE ARCHITECT
APP: 04-120895 INC:
REVIEWED FOR
SS ☑ FLS ☑ ACS ☑
DATE: 06/27/2022
File No:37.rsd A04-120895

KNA STRUCTURAL ENGINEERS
9931 Muirlands Boulevard, Irvine, CA 92618
WWW.KNAstructural.com

KNA JOB NO: 203.654
CONSULTANT BRANDING

RUHNAU CLARKE ARCHITECTS

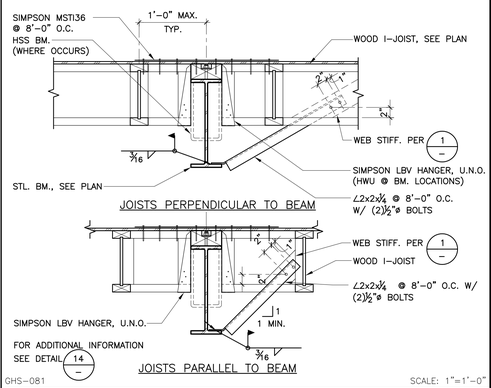

GHS-081 SCALE: 1"=1'-0"

WOOD I-JOIST TO STEEL BEAMS WITH BRACE 18

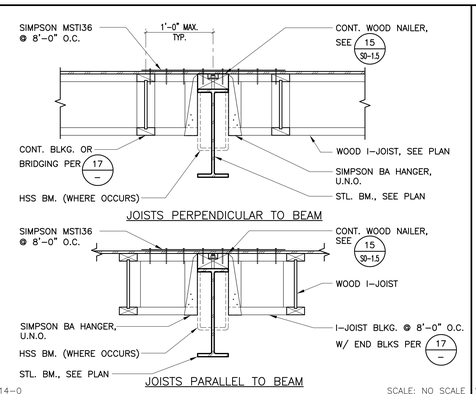

W414-0 SCALE: NO SCALE

WOOD I-JOIST TO STEEL BEAMS 14

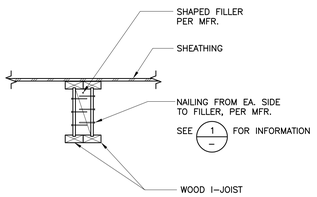

W409-0 SCALE: NO SCALE

DOUBLE WOOD I-JOIST 10

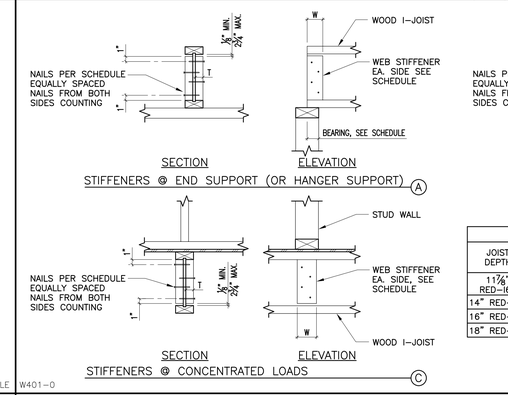

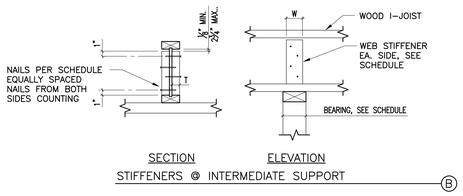

WEB STIFFENER SCHEDULE

JOIST DEPTH	T	W MIN.	NAILS REQUIRED		BEARING	
			END	INT.	END	INT.
11⅞" RED-I65	⅞"	2 5/16"	(3)8d	(3)8d	2½"	3½"
14" RED-I65	⅞"	2 5/16"	(5)8d	(5)8d	2½"	3½"
16" RED-I65	⅞"	2 5/16"	(6)8d	(6)8d	2½"	3½"
18" RED-I65	⅞"	2 5/16"	(7)8d	(7)8d	2½"	3½"

NOTES:
1. WEB STIFFENERS SHALL BE PS-1 PLYWOOD SHTG. W/ FACE GRAIN PARALLEL TO THE LONG AXIS OF THE STIFFENER
2. WEB STIFFENERS SHALL BE FIELD INSTALLED.

W401-0 SCALE: NO SCALE

WOOD I-JOIST WEB STIFFENERS 1

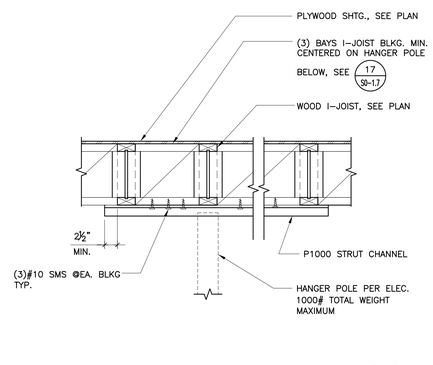

GHS-082 SCALE: 1"=1'-0"

HANGER POLE ATTACHMENT 19

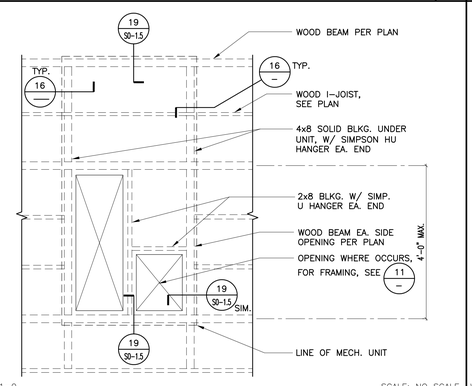

W411-0 SCALE: NO SCALE

ROOF FRAMING AT MECHANICAL UNIT 15

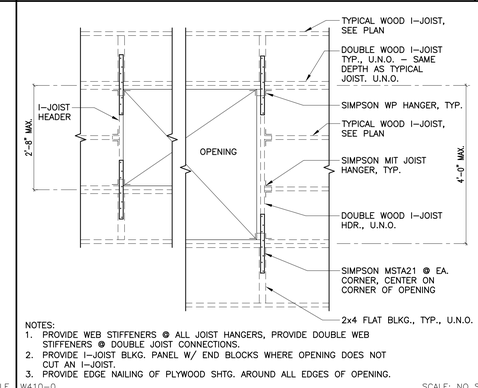

NOTES:
1. PROVIDE WEB STIFFENERS @ ALL JOIST HANGERS, PROVIDE DOUBLE WEB STIFFENERS @ DOUBLE JOIST CONNECTIONS.
2. PROVIDE I-JOIST BLKG. PANEL W/ END BLOCKS WHERE OPENING DOES NOT CUT AN I-JOIST.
3. PROVIDE EDGE NAILING OF PLYWOOD SHTG. AROUND ALL EDGES OF OPENING.

W410-0 SCALE: NO SCALE

WOOD I-JOIST FRAMING AT OPENING 11

W406-0 SCALE: NO SCALE

BLOCKING TO WOOD I-JOIST 7

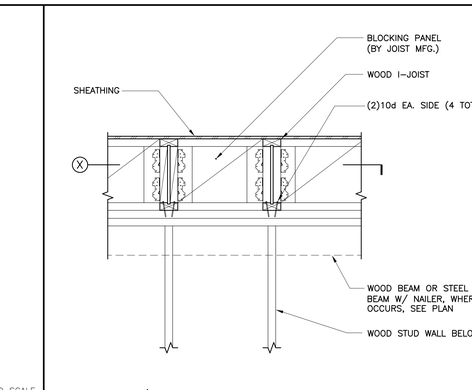

W415-0 SCALE: NO SCALE

HANGER AND BRACING WIRES @ I-JOIST 12

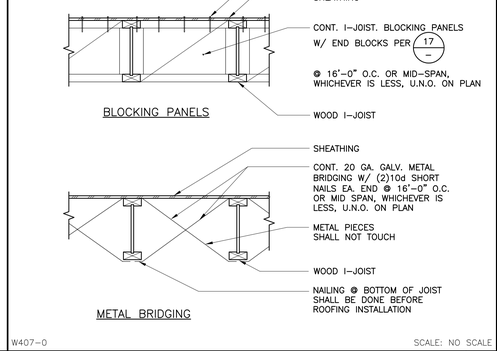

W407-0 SCALE: NO SCALE

WOOD I-JOIST BRIDGING 8

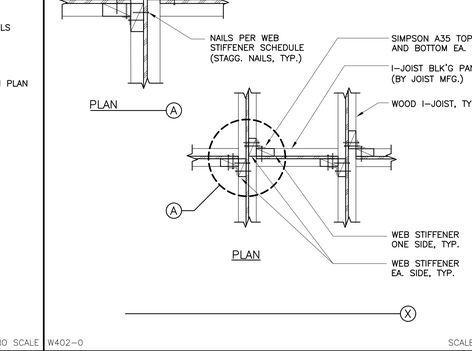

W402-0 SCALE: NO SCALE

WOOD I-JOIST BEARING CONNECTION 3

EQUIPMENT SUPPORT PERPENDICULAR TO ROOF I-JOIST 16

PROJECT No. : 1-30-55
6/21/2022 10:27 AM

DRAWN BY: CHECKED BY:
ISSUE No.___ DATE___ DESCRIPTION___
REVISION No.___ DATE___ DESCRIPTION___

STEEL DETAILS

RUHNAUCLARKE.COM
3775 TENTH STREET, RIVERSIDE CALIFORNIA 92501 (951) 684 4664 / 5751 PALMER WAY, SUITE C, CARLSBAD CALIFORNIA 92010 (760) 438 5899

GHS KITCHEN & WEIGHTROOM MOD
GROSSMONT HIGH SCHOOL
1100 MURRAY DR, EL CAJON, CA 92020
GROSSMONT UNION HIGH SCHOOL

TYPICAL WOOD DETAILS

S0-1.7

1-30-55

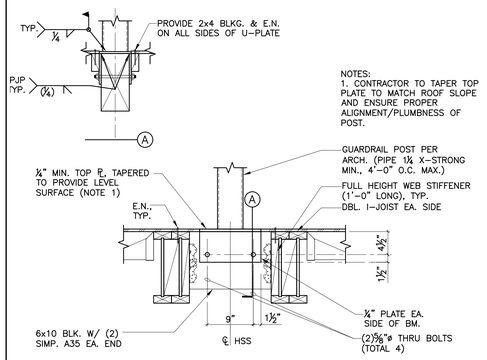

RAIL PARALLEL TO JOIST

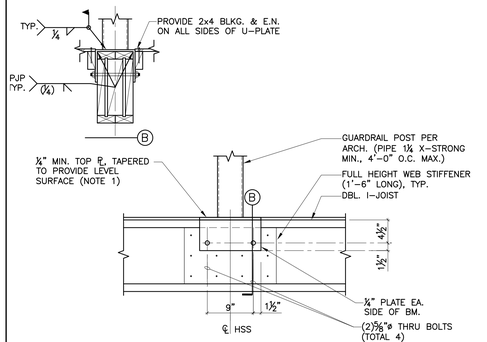

RAIL PERPENDICULAR TO JOIST

GHS-105 SCALE: NO SCALE

ROOFTOP GUARDRAIL POST ATTACHMENT | 18

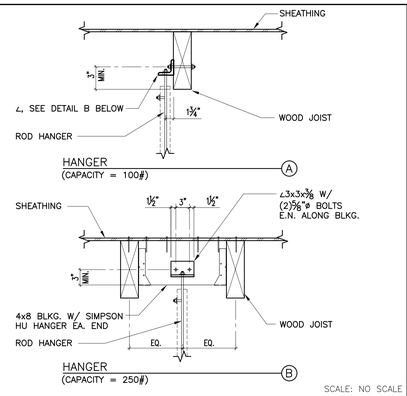

W609-0 SCALE: NO SCALE

ROD HANGER AT WOOD JOISTS | 13

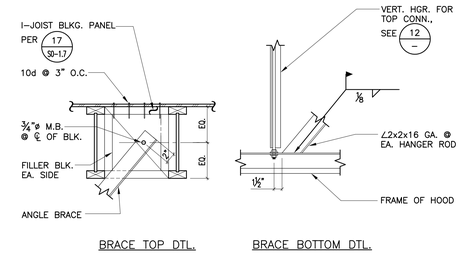

BRACE TOP DTL. BRACE BOTTOM DTL.

NOTE:
SEE ARCH. & FOOD SERVICE DRWGS. FOR HOOD LOCATION AND ADD'L. INFO.

GHS-076 SCALE: 1"=1'-0"

KITCHEN HOOD DIAGONAL SUPPORT DETAIL | 14

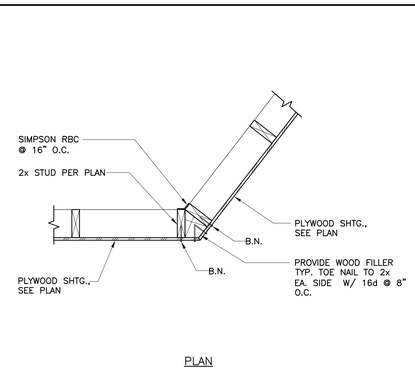

PLAN

W808-0 SCALE: NO SCALE

WALL INTERSECTION | 15

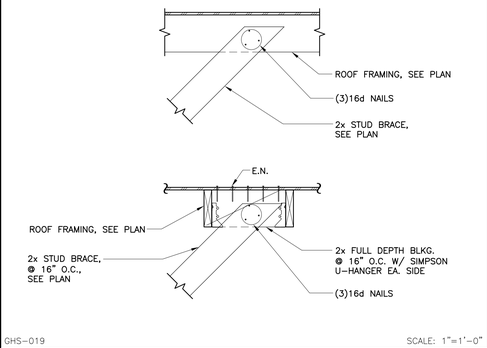

GHS-019 SCALE: 1"=1'-0"

TYP. STUD BRACE TO ROOF FRAMING | 9

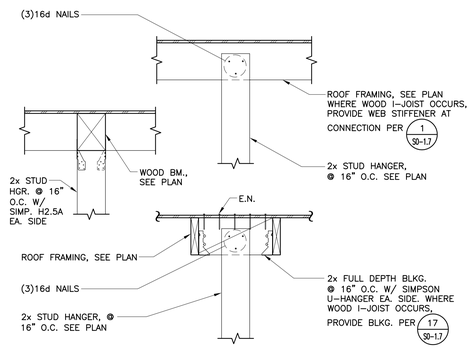

GHS-020 SCALE: 1"=1'-0"

TYP. STUD SOFFIT TO ROOF FRAMING | 10

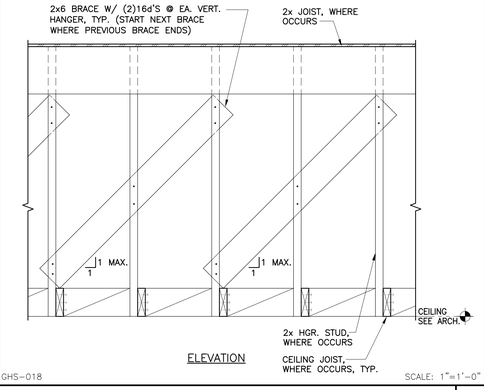

ELEVATION

GHS-018 SCALE: 1"=1'-0"

SOFFIT/ DROP CEILING BRACING | 11

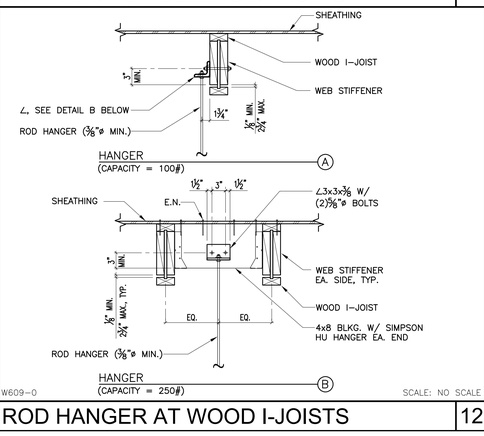

W609-0 SCALE: NO SCALE

ROD HANGER AT WOOD I-JOISTS | 12

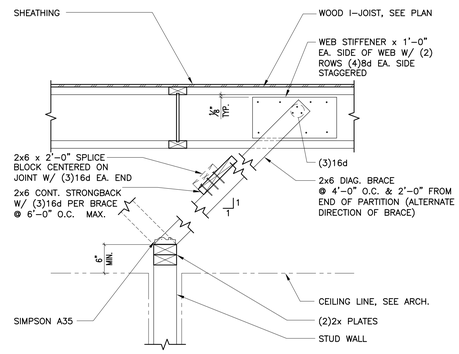

PERPENDICULAR TO JOISTS

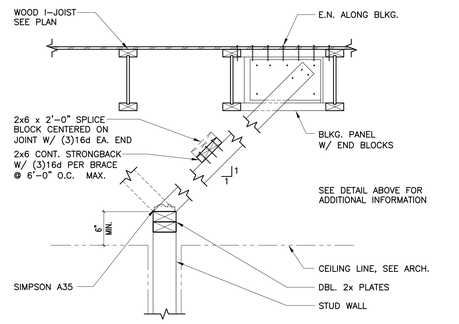

PARALLEL TO JOISTS

(NON-BEARING, AT WOOD I-JOIST)

W504-0 SCALE: 1"=1'-0"

PARTITION TOP BRACE | 6

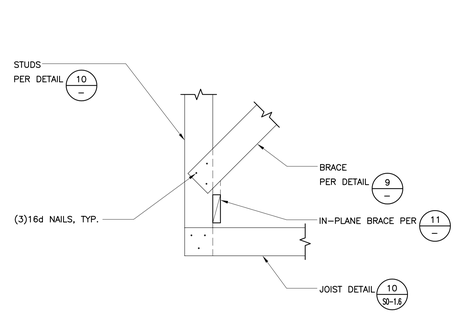

GHS-016 SCALE: 1"=1'-0"

TYP. STUD BRACING | 7

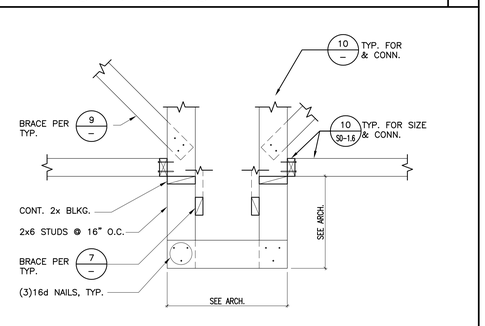

GHS-017 SCALE: 1"=1'-0"

TYP. STUD SOFFIT ELEVATION CHANGE | 8

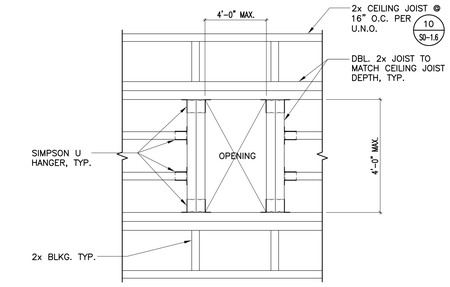

W369-0 SCALE: 1"=1'-0"

OPENING IN CEILING JOIST FRAMING | 1

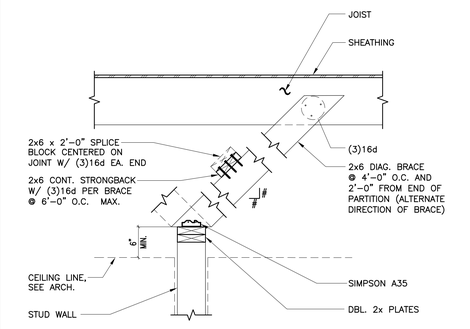

PERPENDICULAR TO JOISTS

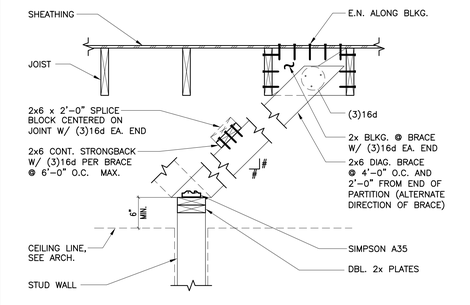

PARALLEL TO JOISTS

(NON-BEARING)

W304-0 SCALE: 1"=1'-0"

WOOD PARTITION TOP BRACING | 3

STAMPS

IDENTIFICATION STAMP
DIV. OF THE STATE ARCHITECT
APP: 04-120895 INC:
REVIEWED FOR
SS ☑ FLS ☑ ACS ☑
DATE: 06/27/2022
File No:37.rvt A04-120895

KNA STRUCTURAL ENGINEERS
9931 Muirlands Boulevard, Irvine, CA 92618
WWW.KNAstructural.com
KNA JOB NO: 203.654
CONSULTANT BRANDING

RUHNAU CLARKE ARCHITECTS

PROJECT No. :1-30-55
6/21/2022 10:27 AM

DRAWN BY: CHECKED BY:

ISSUE No.	DATE	DESCRIPTION	REVISION No.	DATE	DESCRIPTION
ISSUE No.	DATE	DESCRIPTION	REVISION No.	DATE	DESCRIPTION
ISSUE No.	DATE	DESCRIPTION	REVISION No.	DATE	DESCRIPTION
ISSUE No.	DATE	DESCRIPTION	REVISION No.	DATE	DESCRIPTION
ISSUE No.	DATE	DESCRIPTION	REVISION No.	DATE	DESCRIPTION

STEEL DETAILS

RUHNAUCLARKE.COM
3775 TENTH STREET, RIVERSIDE CALIFORNIA 92501 (951) 684 4664 / 5751 PALMER WAY, SUITE C, CARLSBAD CALIFORNIA 92010 (760) 438 5899

GHS KITCHEN & WEIGHTROOM MOD
GROSSMONT HIGH SCHOOL
1100 MURRAY DR, EL CAJON, CA 92020
GROSSMONT UNION HIGH SCHOOL

TYPICAL WOOD DETAILS

S0-1.8

1-30-55

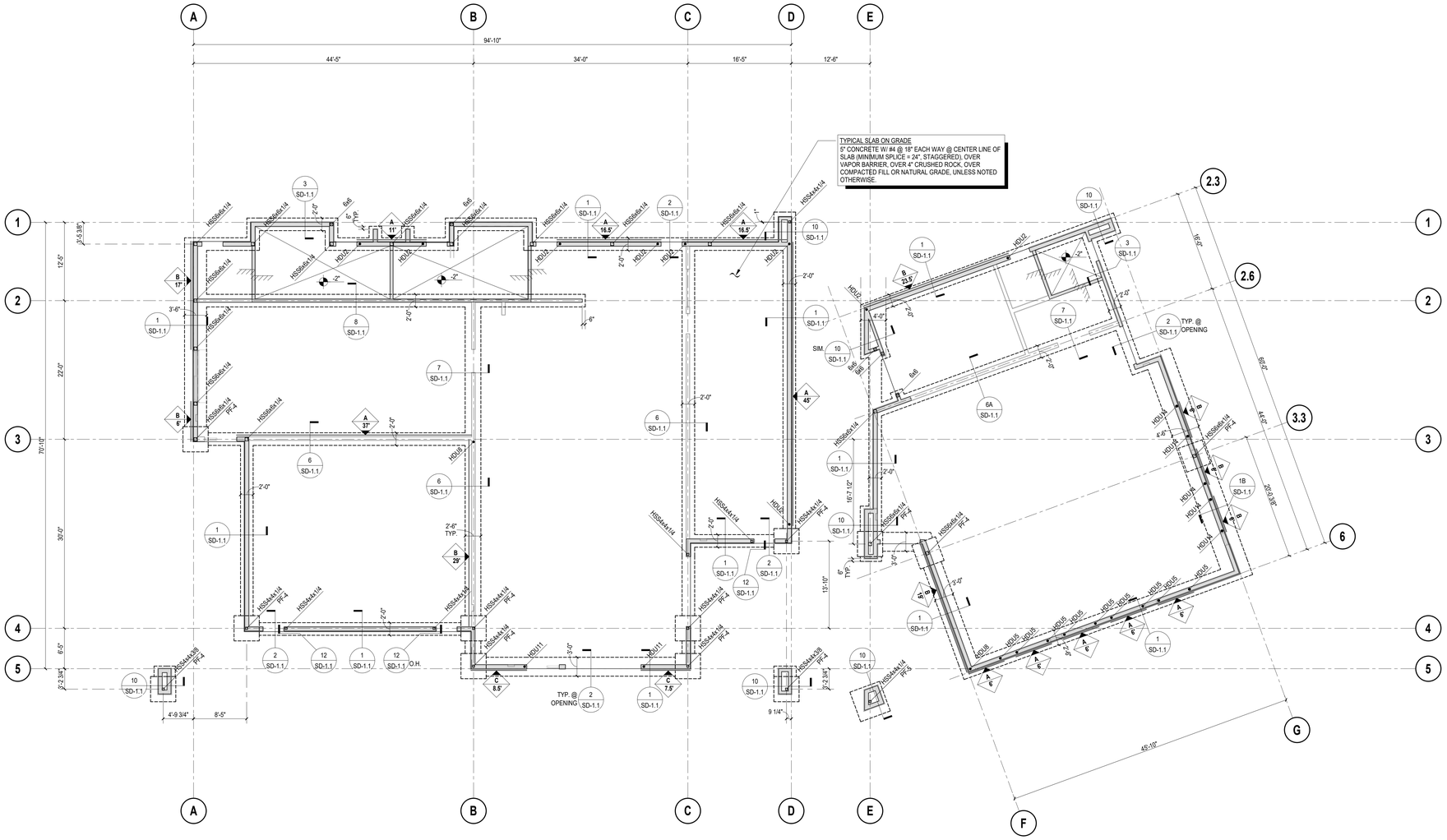

FOUNDATION PLAN - WEIGHT ROOM BLDG.

SCALE: 1/8" = 1'-0"

STAMPS

IDENTIFICATION STAMP
DIV. OF THE STATE ARCHITECT
APP: 04-120895 INC:
REVIEWED FOR
SS ☑ FLS ☑ ACS ☑
DATE: 06/27/2022

KNA STRUCTURAL ENGINEERS
9931 Muirlands Boulevard, Irvine, CA 92618
Tel (949) 462-3200 Fax (949) 462-3201
www.KNAstructural.com

KNA Job No.: 203.654
CONSULTANT BRANDING

RUHNAU CLARKE ARCHITECTS

FOUNDATION PLAN NOTES

1. SEE SHEETS S0-0.1 THROUGH S0-1.8 FOR GENERAL NOTES AND TYPICAL DETAILS.
2. SEE SPECIFICATIONS FOR ALL SITE AND SUBGRADE PREPARATIONS.
3. SEE ARCHITECTURAL AND/OR CIVIL DRAWINGS FOR FINISH FLOOR ELEVATIONS.
4. SEE ARCHITECTURAL AND CIVIL DRAWINGS FOR ALL EXTERIOR CONCRETE PAVING, SLABS, BASES, CURBS, SITE WALLS, ETC.
5. FOR ANY DIMENSIONAL INFORMATION NOT SHOWN, SEE ARCHITECTURAL DRAWINGS.
6. SEE PLANS AND ARCHITECTURAL DRAWINGS FOR DEPRESSIONS AND/OR SLOPES IN CONCRETE SLABS.
7. ALL DIMENSIONS SHOWN ARE FROM FACE OF STUD, CENTER LINE OF COLUMN, OR CENTER LINE OF WALL, UNLESS NOTED OTHERWISE. ALL COLUMNS ARE CENTERED IN STUD WALL, UNLESS NOTED OTHERWISE.
8. SEE ARCHITECTURAL DRAWINGS FOR SIZE AND LOCATION OF ALL DOOR AND WINDOW OPENINGS IN BEARING AND NON-BEARING WALLS.
9. SEE ARCHITECTURAL DRAWINGS FOR LOCATION OF INTERIOR NON-BEARING PARTITIONS. INTERIOR NON-BEARING PARTITION WALLS THAT DO NOT REQUIRE CONCRETE CURBS ARE NOT SHOWN ON STRUCTURAL DRAWINGS.
10. SEE ARCHITECTURAL, PLUMBING, MECHANICAL, ELECTRICAL, AND KITCHEN DRAWINGS FOR ADDITIONAL EMBEDDED ITEMS AND SLAB PENETRATIONS.
11. ALL WALLS SHOWN WITH PLYWOOD SHEAR PANELS SHALL BE CONTINUOUSLY SHEATHED FOR THE FULL LENGTH OF THE WALL WITH THE SAME SHEATHING AS INDICATED. ALL EXTERIOR WALLS SHALL HAVE TYPE A PLYWOOD SHEATHING APPLIED TO THE OUTSIDE FACE PER DETAIL 1/S0-1.6 , UNLESS NOTED OTHERWISE.
12. FOR TYPICAL PIPE CHASE IN CONCRETE STEM WALL, SEE DETAIL 5/SD-1.1.
13. FOR TYPICAL SLAB JOINTS, SEE DETAIL 10/S0-1.1.

LEGEND

HSS3x3x0.375 PF-3 : INDICATES STEEL COLUMN SIZE. SEE DETAIL 3/S0-1.4 FOR STEEL COLUMN BASE PLATE, U.N.O.

: INDICATES CONCRETE FOOTING. SEE DETAIL 9/S0-1.1 FOR ADDITIONAL INFORMATION.

6' : INDICATES PLYWOOD SHEAR WALL TYPE PER 1/S0-1.6 .

: INDICATES LENGTH OF WALL USED FOR DESIGN. ACTUAL LENGTH OF WALL MAY EXCEED, BUT SHALL NOT BE LESS THAN THE LENGTH SHOWN.

HDU8 : INDICATES SIMPSON HOLDOWN ANCHOR. SEE DETAIL 12/S0-1.6 FOR ADDITIONAL INFORMATION.

: INDICATES CONCRETE CURB. SEE PLANS AND DETAIL 14/S0-1.1 FOR ADDITIONAL INFORMATION.

S S : INDICATES STEP IN CONTINUOUS FOOTING. SEE DETAILS 5/S0-1.1 FOR ADDITIONAL INFORMATION. STEP CONTINUOUS FOOTING TO MATCH BOTTOM OF LOWEST ADJACENT FOOTING ELEVATION.
(NOTE: STEPPED FOOTING SHOWN ON PLANS ARE PROVIDED TO AVOID UNDERGROUND UTILITIES AND ACTUAL LOCATION AND NUMBER OF STEPS SHALL BE COORDINATED IN THE FIELD, AND VERIFIED BY THE CONTRACTOR. ADDITIONAL LOCATIONS MAY BE REQUIRED. PROVIDE COMPLIANCE WITH DETAIL 3/S0-1.1).

: INDICATES CHANGE IN ELEVATION.

: INDICATES TOP OF SLAB ELEVATION (WHERE INDICATED), +0'-0" U.N.O.

PROJECT No. :1-30-55
6/21/2022 11:06:33 AM

DRAWN BY: CHECKED BY:

ISSUE No.____ DATE_____ DESCRIPTION_____
REVISION No.____ DATE_____ DESCRIPTION_____

RUHNAUCLARKE.COM
3775 TENTH STREET, RIVERSIDE CALIFORNIA 92501 (951) 684 4664 / 5751 PALMER WAY, SUITE C, CARLSBAD CALIFORNIA 92010 (760) 438 5899

GHS KITCHEN & WEIGHTROOM MOD
GROSSMONT HIGH SCHOOL
1100 MURRAY DR, EL CAJON, CA 92020
GROSSMONT UNION HIGH SCHOOL

BUILDING 900
FOUNDATION PLAN

S1-1.1

1-30-55

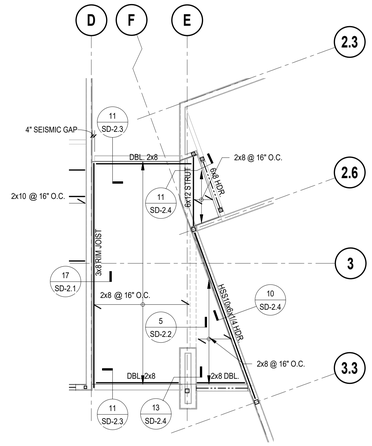

LOW CANOPY FRAMING PLAN

SCALE: 1/8" = 1'-0"

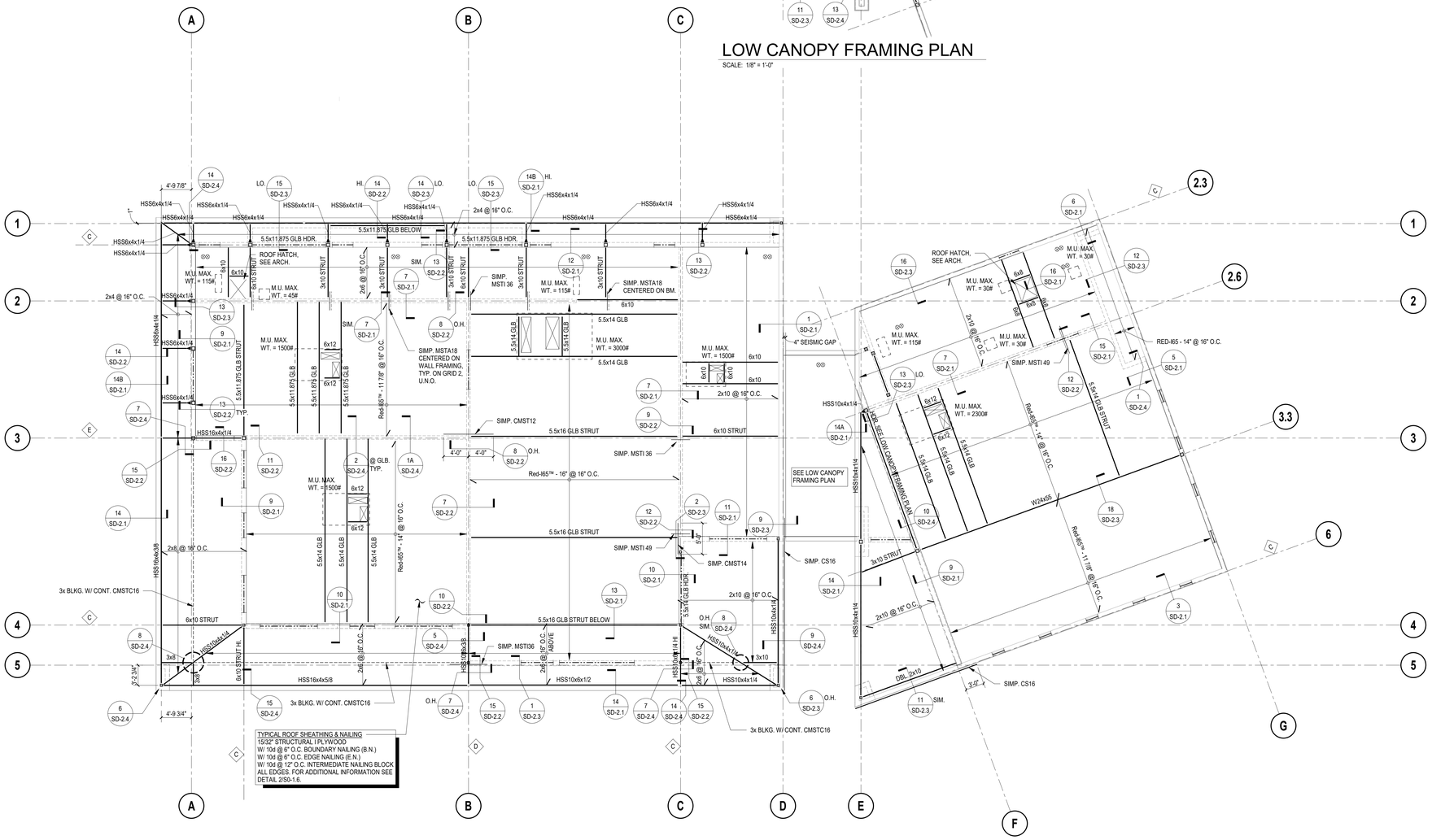

ROOF FRAMING PLAN - WEIGHT ROOM BLDG.

SCALE: 1/8" = 1'-0"

STAMPS

REGISTERED PROFESSIONAL ENGINEER — No. 2795 Exp. 9-30-23 — STRUCTURAL — STATE OF CALIFORNIA

LICENSED ARCHITECT — No. C-21340 Exp. 10-31-22 — STATE OF CALIFORNIA

IDENTIFICATION STAMP
DIV. OF THE STATE ARCHITECT
APP: 04-120895 INC:
REVIEWED FOR
SS ☑ FLS ☑ ACS ☑
DATE: 06/27/2022
File No:37.n4 A04-120895

KNA STRUCTURAL ENGINEERS
9931 Muirlands Boulevard, Irvine, CA 92618
Tel (949) 462-3200 Fax (949) 462-3201
www.KNAstructural.com
KNA Job No.: 203.654
CONSULTANT BRANDING

RUHNAU CLARKE ARCHITECTS

ROOF FRAMING PLAN NOTES

1. SEE SHEETS S0-0.1 THROUGH S0-1.8 FOR GENERAL NOTES AND TYPICAL DETAILS.
2. SEE ARCHITECTURAL DRAWINGS FOR ALL TOP OF SHEATHING AND TOP OF WALL/PARAPET ELEVATIONS.
3. SEE ARCHITECTURAL, PLUMBING, MECHANICAL, AND ELECTRICAL DRAWINGS FOR SIZE AND LOCATION OF ROOF OPENINGS NOT SHOWN ON ROOF FRAMING PLANS. SEE DETAILS 9/S0-1.5 AND 11/S0-1.7 FOR TYPICAL OPENINGS, UNLESS NOTED OTHERWISE.
4. SEE ARCHITECTURAL DRAWINGS FOR SIZE AND LOCATION OF ALL DOOR AND WINDOW OPENINGS IN BEARING AND NON-BEARING WALLS.
5. PROVIDE 2" BY FULL DEPTH SOLID BLOCKING AT 8'-0" MAXIMUM FOR ROOF JOISTS OR RAFTERS MORE THAN 8" IN DEPTH. FOR ADDITIONAL INFORMATION SEE DETAIL 7/S0-1.5 AND 8/S0-1.7.
6. ALL LINES AND/OR MEMBERS INDICATED AS "STRUT" SHALL RECEIVE (2) ROWS OF BOUNDARY NAILING (B.N.), STAGGERED.
7. I-JOIST HANGERS SHALL BE SIMPSON MIT HANGERS, UNLESS NOTED OTHERWISE.
8. WHERE TOP PLATES ARE INTERRUPTED BY A STEEL COLUMN, PROVIDE TIE PLATE CONNECTION PER DETAIL 7A/S0-1.6, UNLESS NOTED OTHERWISE.

LEGEND

: INDICATES WOOD HEADER OVER OPENING BELOW. SEE DETAIL 1/S0-1.5 FOR SIZE & FRAMING UNLESS NOTED OTHERWISE ON PLAN.

: INDICATES SPAN OF JOISTS.

: INDICATES EXTENT OF JOISTS.

: INDICATES TOP PLATE SPLICE. SEE DETAILS 5/S0-1.6 AND 6/S0-1.6. PROVIDE TOP PLATE SPLICE PER DETAIL 5C/S0-1.6, UNLESS NOTED OTHERWISE. WHERE TOP PLATES BREAK, SPLICE PER DETAIL 6F/S0-1.6, UNLESS NOTED OTHERWISE. WHERE HSS COLUMN INTERRUPS TOP PLATES OR TOP PLATES TERMINATE AT HSS COLUMN, PROVIDE SPLICE PER 7A/S0-1.6.

PROJECT No. :1-30-55
6/21/2022 11:06:38 AM

DRAWN BY: CHECKED BY:

ISSUE No.____	DATE____	DESCRIPTION____	REVISION No.____	DATE____	DESCRIPTION____
ISSUE No.____	DATE____	DESCRIPTION____	REVISION No.____	DATE____	DESCRIPTION____
ISSUE No.____	DATE____	DESCRIPTION____	REVISION No.____	DATE____	DESCRIPTION____
ISSUE No.____	DATE____	DESCRIPTION____	REVISION No.____	DATE____	DESCRIPTION____

RUHNAUCLARKE.COM
3775 TENTH STREET, RIVERSIDE CALIFORNIA 92501 (951) 684 4664 / 5751 PALMER WAY, SUITE C, CARLSBAD CALIFORNIA 92010 (760) 438 5899

GHS KITCHEN & WEIGHTROOM MOD
GROSSMONT HIGH SCHOOL
1100 MURRAY DR, EL CAJON, CA 92020
GROSSMONT UNION HIGH SCHOOL

BUILDING 900
ROOF FRAMING PLAN

S1-3.1

1-30-55

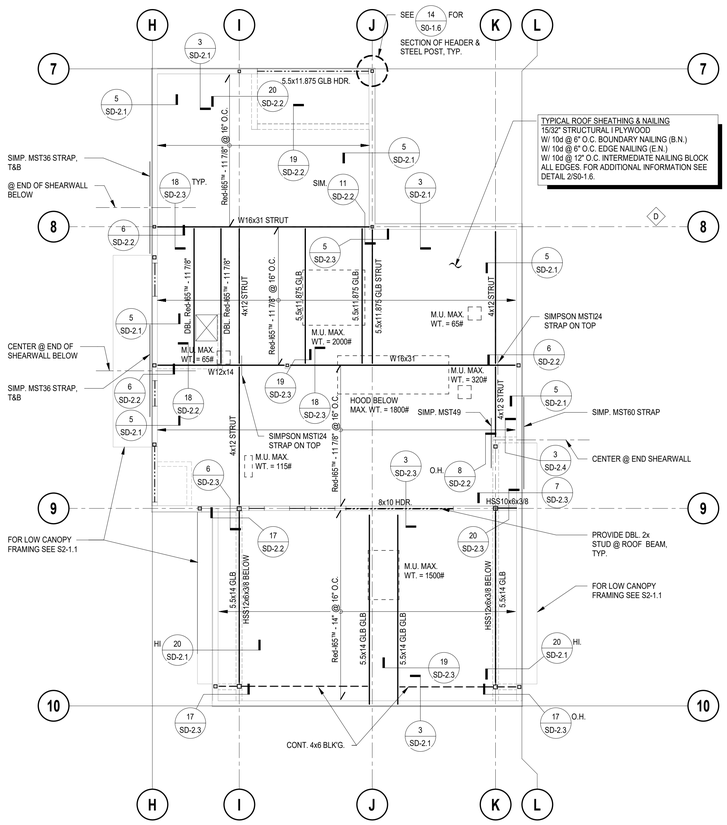

BUILDING 400 - ROOF FRAMING PLAN

SCALE: 1/8" = 1'-0"

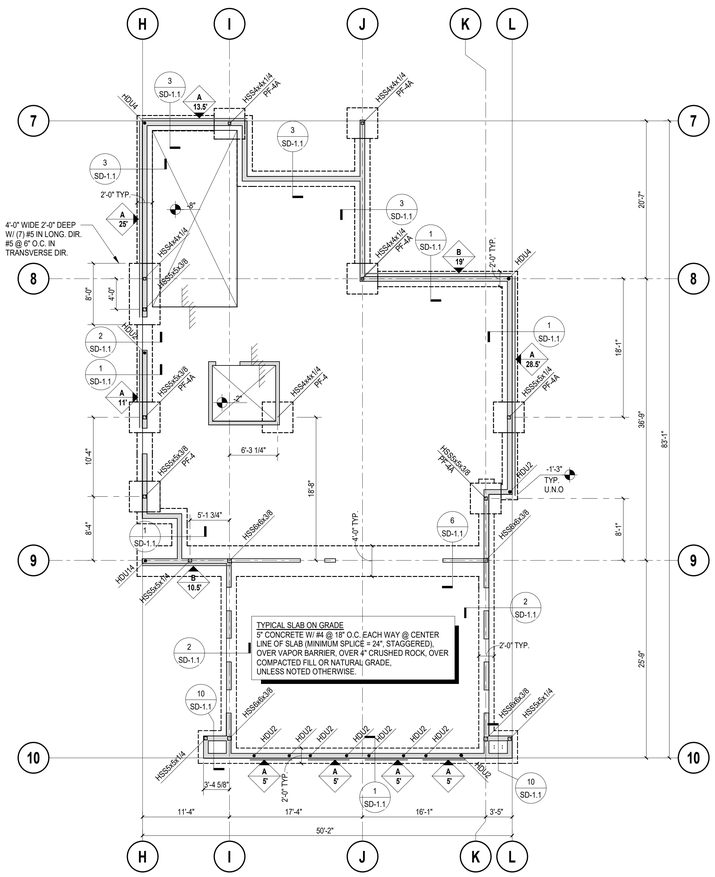

BUILDING 400 - FOUNDATION PLAN

SCALE: 1/8" = 1'-0"

STAMPS

IDENTIFICATION STAMP
DIV. OF THE STATE ARCHITECT
APP: 04-120895 INC:
REVIEWED FOR
SS ☑ FLS ☑ ACS ☑
DATE: 06/27/2022

KNA STRUCTURAL ENGINEERS
9931 Muirlands Boulevard, Irvine, CA 92618
Tel (949) 462-3200 Fax (949) 462-3201
www.KNAstructural.com
KNA Job No.: 203.654
CONSULTANT BRANDING

RUHNAU CLARKE ARCHITECTS

FOUNDATION PLAN NOTES

1. SEE SHEETS S0-0.1 THROUGH S0-1.8 FOR GENERAL NOTES AND TYPICAL DETAILS.
2. SEE SPECIFICATIONS FOR ALL SITE AND SUBGRADE PREPARATIONS.
3. SEE ARCHITECTURAL AND/OR CIVIL DRAWINGS FOR FINISH FLOOR ELEVATIONS.
4. SEE ARCHITECTURAL AND CIVIL DRAWINGS FOR ALL EXTERIOR CONCRETE PAVING, SLABS, BASES, CURBS, SITE WALLS, ETC.
5. FOR ANY DIMENSIONAL INFORMATION NOT SHOWN, SEE ARCHITECTURAL DRAWINGS.
6. SEE PLANS AND ARCHITECTURAL DRAWINGS FOR DEPRESSIONS AND/OR SLOPES IN CONCRETE SLABS.
7. ALL DIMENSIONS SHOWN ARE FROM FACE OF STUD, CENTER LINE OF COLUMN, OR CENTER LINE OF WALL, UNLESS NOTED OTHERWISE. ALL COLUMNS ARE CENTERED IN STUD WALL, UNLESS NOTED OTHERWISE.
8. SEE ARCHITECTURAL DRAWINGS FOR SIZE AND LOCATION OF ALL DOOR AND WINDOW OPENINGS IN BEARING AND NON-BEARING WALLS.
9. SEE ARCHITECTURAL DRAWINGS FOR LOCATION OF INTERIOR NON-BEARING PARTITIONS. INTERIOR NON-BEARING PARTITION WALLS THAT DO NOT REQUIRE CONCRETE CURBS ARE NOT SHOWN ON STRUCTURAL DRAWINGS.
10. SEE ARCHITECTURAL, PLUMBING, MECHANICAL, ELECTRICAL, AND KITCHEN DRAWINGS FOR ADDITIONAL EMBEDDED ITEMS AND SLAB PENETRATIONS.
11. ALL WALLS SHOWN WITH PLYWOOD SHEAR PANELS SHALL BE CONTINUOUSLY SHEATHED FOR THE FULL LENGTH OF THE WALL WITH THE SAME SHEATHING AS INDICATED. ALL EXTERIOR WALLS SHALL HAVE TYPE A PLYWOOD SHEATHING APPLIED TO THE OUTSIDE FACE PER DETAIL 1/S0-1.6 , UNLESS NOTED OTHERWISE.
12. FOR TYPICAL PIPE CHASE IN CONCRETE STEM WALL, SEE DETAIL 5/SD-1.1.
13. FOR TYPICAL SLAB JOINTS, SEE DETAIL 10/S0-1.1.

ROOF FRAMING PLAN NOTES

1. SEE SHEETS S0-0.1 THROUGH S0-1.8 FOR GENERAL NOTES AND TYPICAL DETAILS.
2. SEE ARCHITECTURAL DRAWINGS FOR ALL TOP OF SHEATHING AND TOP OF WALL/PARAPET ELEVATIONS.
3. SEE ARCHITECTURAL, PLUMBING, MECHANICAL, AND ELECTRICAL DRAWINGS FOR SIZE AND LOCATION OF ROOF OPENINGS NOT SHOWN ON ROOF FRAMING PLANS. SEE DETAILS 9/S0-1.5 AND 11/S0-1.7 FOR TYPICAL OPENINGS, UNLESS NOTED OTHERWISE.
4. SEE ARCHITECTURAL DRAWINGS FOR SIZE AND LOCATION OF ALL DOOR AND WINDOW OPENINGS IN BEARING AND NON-BEARING WALLS.
5. PROVIDE 2" BY FULL DEPTH SOLID BLOCKING AT 8'-0" MAXIMUM FOR ROOF JOISTS OR RAFTERS MORE THAN 8" IN DEPTH. FOR ADDITIONAL INFORMATION SEE DETAIL 7/S0-1.5 AND 8/S0-1.7.
6. ALL LINES AND/OR MEMBERS INDICATED AS "STRUT" SHALL RECEIVE (2) ROWS OF BOUNDARY NAILING (B.N.), STAGGERED.
7. I-JOIST HANGERS SHALL BE SIMPSON MIT HANGERS, UNLESS NOTED OTHERWISE.
8. WHERE TOP PLATES ARE INTERRUPTED BY A STEEL COLUMN, PROVIDE TIE PLATE CONNECTION PER DETAIL 7/S0-1.6, UNLESS NOTED OTHERWISE.
9. PROVIDE DBL. 2x STUDS WHERE BEARING WALL SUPPORTS BEAM AND PROVIDE (2) 10d NAIL @ 12" O.C. TO SISTER DOUBLE STUD TOGETHER.

LEGEND

- HSS5x5x5/16 PF-3 — : INDICATES STEEL COLUMN SIZE. SEE DETAIL 3/S0-1.4 FOR STEEL COLUMN BASE PLATE, U.N.O.
- : INDICATES CONCRETE FOOTING. SEE DETAIL 9/S0-1.1 FOR ADDITIONAL INFORMATION.
- 6" — : INDICATES PLYWOOD SHEAR WALL TYPE PER 1/S0-1.6 .
- : INDICATES LENGTH OF WALL USED FOR DESIGN. ACTUAL LENGTH OF WALL MAY EXCEED, BUT SHALL NOT BE LESS THAN THE LENGTH SHOWN.
- HDU8 — : INDICATES SIMPSON HOLDOWN ANCHOR. SEE DETAIL 12/S0-1.6 FOR ADDITIONAL INFORMATION.
- : INDICATES CONCRETE CURB. SEE PLANS AND DETAIL 14/S0-1.1 FOR ADDITIONAL INFORMATION.
- S — S : INDICATES STEP IN CONTINUOUS FOOTING. SEE DETAILS 5/S0-1.1 FOR ADDITIONAL INFORMATION. STEP CONTINUOUS FOOTING TO MATCH BOTTOM OF LOWEST ADJACENT FOOTING ELEVATION. (NOTE: STEPPED FOOTING SHOWN ON PLANS ARE PROVIDED TO AVOID UNDERGROUND UTILITIES AND ACTUAL LOCATION AND NUMBER OF STEPS SHALL BE COORDINATED IN THE FIELD, AND VERIFIED BY THE CONTRACTOR. ADDITIONAL LOCATIONS MAY BE REQUIRED. PROVIDE COMPLIANCE WITH DETAIL 3/S0-1.1).
- : INDICATES CHANGE IN ELEVATION.
- : INDICATES TOP OF SLAB ELEVATION (WHERE INDICATED).
- : INDICATES WOOD HEADER OVER OPENING BELOW. SEE DETAIL 1/S0-1.5 FOR SIZE & FRAMING FOR BEARING WALLS UNLESS NOTED OTHERWISE ON PLAN. FOR NON-BEARING WALLS HDR. USES 1/2" DEEP HEADER IN NOT LONGER THAN 8'-0".
- : INDICATES SPAN OF JOISTS.
- : INDICATES EXTENT OF JOISTS.
- C — : INDICATES TOP PLATE SPLICE. SEE DETAILS 5/S0-1.6 AND 6/S0-1.6. PROVIDE TOP PLATE SPLICE PER DETAIL 5C/S0-1.6, UNLESS NOTED OTHERWISE. WHERE TOP PLATES BREAK, SPLICE PER DETAIL 6F/S0-1.6, UNLESS NOTED OTHERWISE. WHERE HSS COLUMN INTERRUPS TOP PLATES OR TOP PLATES TERMINATE AT HSS COLUMN, PROVIDE SPLICE PER 7A/S0-1.6.

PROJECT No. :1-30-55
6/21/2022 11:06:42 AM

DRAWN BY: CHECKED BY:

ISSUE No.	DATE	DESCRIPTION	REVISION No.	DATE	DESCRIPTION
ISSUE No.	DATE	DESCRIPTION	REVISION No.	DATE	DESCRIPTION
ISSUE No.	DATE	DESCRIPTION	REVISION No.	DATE	DESCRIPTION
ISSUE No.	DATE	DESCRIPTION	REVISION No.	DATE	DESCRIPTION

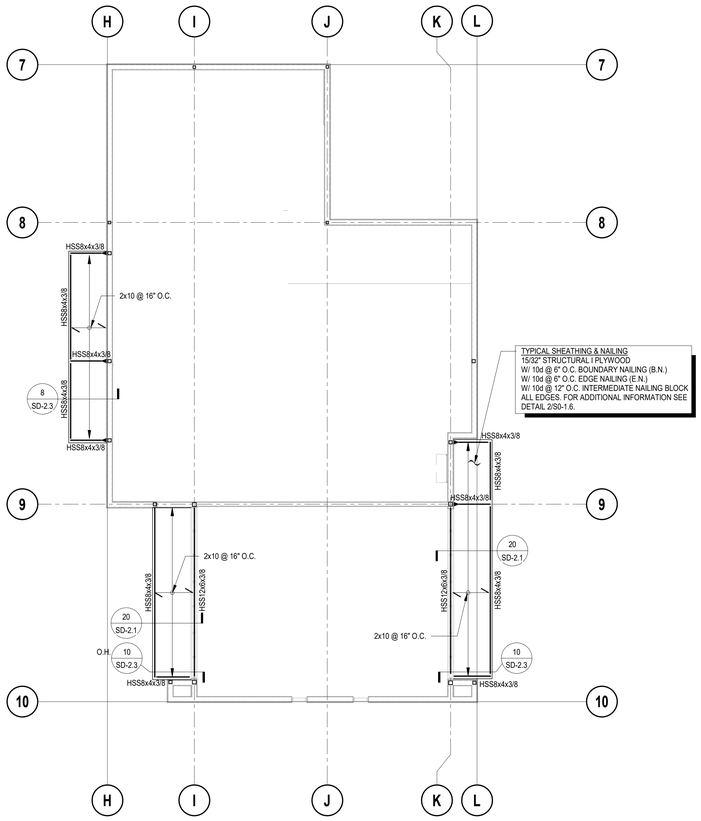

BUILDING 400 - CANOPY FRAMING PLAN

SCALE: 1/8" = 1'-0"

STAMPS

IDENTIFICATION STAMP
DIV. OF THE STATE ARCHITECT
APP: 04-120895 INC:
REVIEWED FOR
SS ☑ FLS ☑ ACS ☑
DATE: 06/27/2022
File No:37.n4 A04-120895

KNA STRUCTURAL ENGINEERS
9931 Muirlands Boulevard, Irvine, CA 92618
Tel (949) 462-3200 Fax (949) 462-3201
www.KNAstructural.com

KNA Job No.: 203.654
CONSULTANT BRANDING

RUHNAU CLARKE ARCHITECTS

ROOF FRAMING PLAN NOTES

1. SEE SHEETS S0-0.1 THROUGH S0-1.8 FOR GENERAL NOTES AND TYPICAL DETAILS.
2. FOR ANY DIMENSIONAL INFORMATION NOT SHOWN, SEE ARCHITECTURAL DRAWINGS.
3. ALL BEAMS SHALL BE EQUALLY SPACED BETWEEN COLUMNS, UNLESS NOTED OTHERWISE.

LEGEND

: INDICATES WOOD HEADER OVER OPENING BELOW. SEE DETAIL 1/S0-1.5 FOR SIZE & FRAMING UNLESS NOTED OTHERWISE ON PLAN.

: INDICATES SPAN OF JOISTS.

: INDICATES EXTENT OF JOISTS.

PROJECT No. :1-30-55
6/21/2022 11:06:42 AM

DRAWN BY: CHECKED BY:

ISSUE No.____ DATE____ DESCRIPTION____
ISSUE No.____ DATE____ DESCRIPTION____
ISSUE No.____ DATE____ DESCRIPTION____
ISSUE No.____ DATE____ DESCRIPTION____

REVISION No.____ DATE____ DESCRIPTION____
REVISION No.____ DATE____ DESCRIPTION____
REVISION No.____ DATE____ DESCRIPTION____
REVISION No.____ DATE____ DESCRIPTION____

RUHNAUCLARKE.COM
3775 TENTH STREET, RIVERSIDE CALIFORNIA 92501(951) 684 4664 / 5751 PALMER WAY, SUITE C, CARLSBAD CALIFORNIA 92010(760) 438 5899

GHS KITCHEN & WEIGHTROOM MOD
GROSSMONT HIGH SCHOOL
1100 MURRAY DR, EL CAJON, CA 92020
GROSSMONT UNION HIGH SCHOOL

CANOPY FRAMING PLAN **S2-1.1**

1-30-55

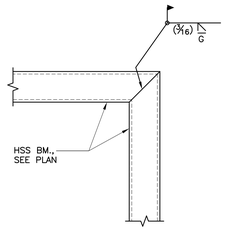

PLAN

GHS-066 SCALE: 1"=1'-0"

DETAIL 17

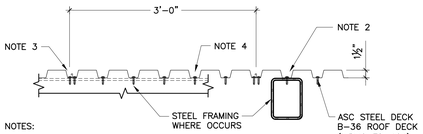

NOTES:

1. T INDICATES #12 SELF-DRILLING SELF-TAPPING SCREWS.
2. WHERE DECK RIBS ARE PARALLEL TO SUPPORTS USE #12 SELF-DRILLING SELF-TAPPING SCREWS @ 12" O.C.
3. SEAM ATTACHMENT TO BE A DELTA GRIP SIDE LAP @ 12" O.C.
4. DECK IS TO BE FASTENED TO SUPPORTS BY #12 SELF-DRILLING SELF-TAPPING SCREWS AS SHOWN.
5. DECK SHALL BE CONTINUOUS OVER 2 SPANS.
6. MINMUM DECK PROPERTIES:

MINIMUM DECK PROPERTIES	
GAUGE	18
I in^4	0.302
S+ (in^3)	0.314
S- (in^3)	0.331

GHS-066 SCALE: 1"=1'-0"

DETAIL 18

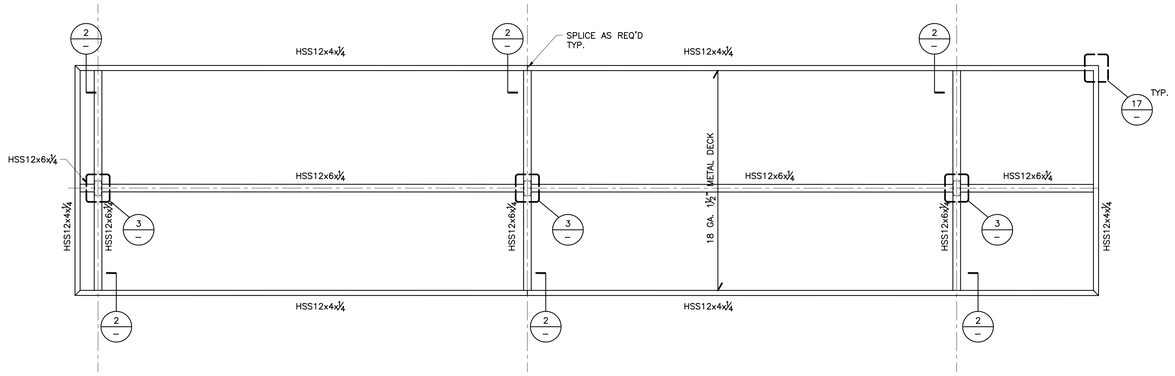

NOTE:
FOR ADDITIONAL INFORMATION ON METAL DECK SEE DETAIL 18

GHS-062 SCALE: 1/4"=1'-0"

ROOF FRAMING PLAN 6

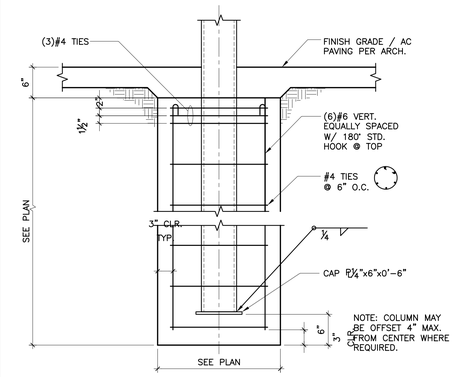

GHS-063 SCALE: 1"=1'-0"

DETAIL 1

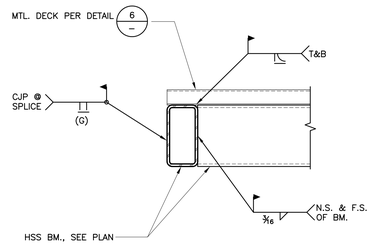

GHS-064 SCALE: 1"=1'-0"

DETAIL 2

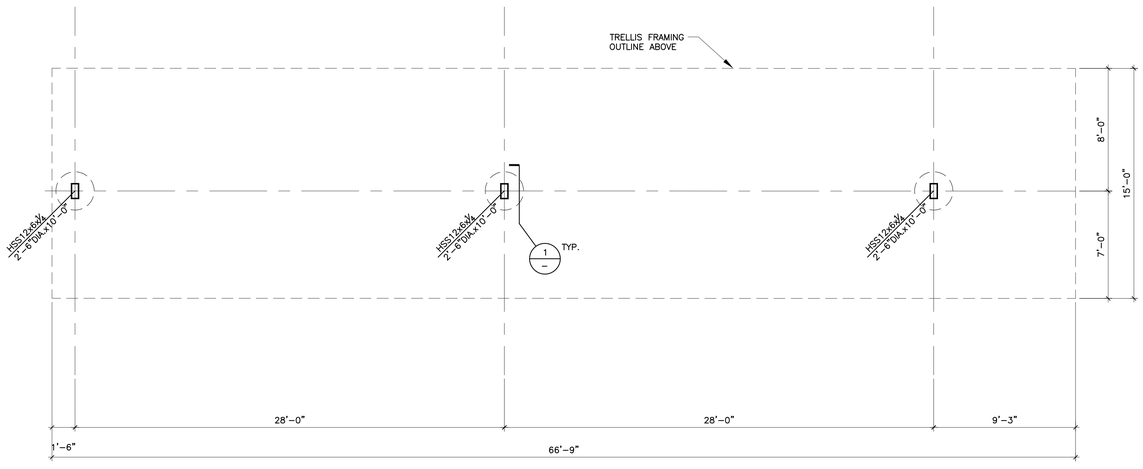

GHS-061 SCALE: 1/4"=1'-0"

FOUNDATION PLAN 8

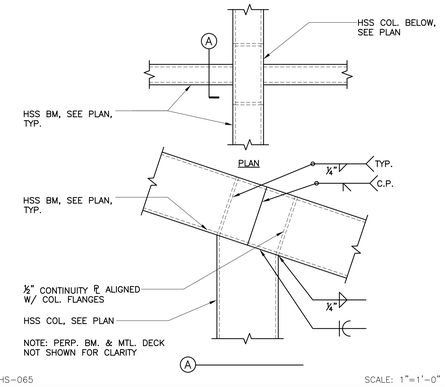

GHS-065 SCALE: 1"=1'-0"

DETAIL 3

STAMPS

REGISTERED PROFESSIONAL ENGINEER — JOHN C. KAPP — No. 2795 Exp. 9-30-23 — STRUCTURAL — STATE OF CALIFORNIA

LICENSED ARCHITECT — ROGER CLARKE — No. C-21340 Exp. 10-31-23 — STATE OF CALIFORNIA

IDENTIFICATION STAMP
DIV. OF THE STATE ARCHITECT
APP: 04-120895 INC:
REVIEWED FOR
SS ☑ FLS ☑ ACS ☑
DATE: 06/27/2022
File No:37.ext A04-120895

KNA STRUCTURAL ENGINEERS
9931 Muirlands Boulevard, Irvine, CA 92618
WWW.KNAstructural.com

KNA JOB NO: 203.654
CONSULTANT BRANDING

RUHNAU CLARKE ARCHITECTS

19

20

PROJECT No. : 1-30-55
6/21/2022 10:27 AM

DRAWN BY: CHECKED BY:

ISSUE No.	DATE	DESCRIPTION	REVISION No.	DATE	DESCRIPTION
ISSUE No.	DATE	DESCRIPTION	REVISION No.	DATE	DESCRIPTION
ISSUE No.	DATE	DESCRIPTION	REVISION No.	DATE	DESCRIPTION
ISSUE No.	DATE	DESCRIPTION	REVISION No.	DATE	DESCRIPTION

RUHNAUCLARKE.COM
3775 TENTH STREET, RIVERSIDE CALIFORNIA 92501 (951) 684 4664 / 5751 PALMER WAY, SUITE C, CARLSBAD CALIFORNIA 92010 (760) 438 5899

GHS KITCHEN & WEIGHTROOM MOD
GROSSMONT HIGH SCHOOL
1100 MURRAY DR, EL CAJON, CA 92020
GROSSMONT UNION HIGH SCHOOL

SHADE CANOPY DETAILS

S3-1.1

1-30-55

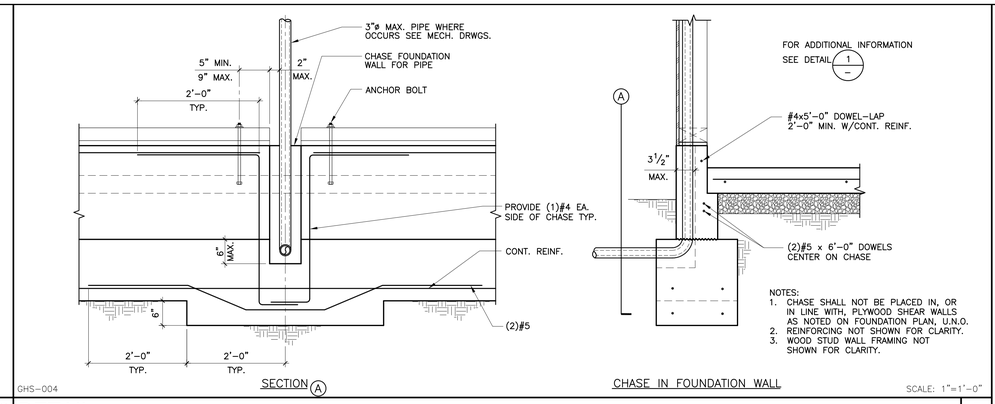

17 | 13 | DETAIL | 5

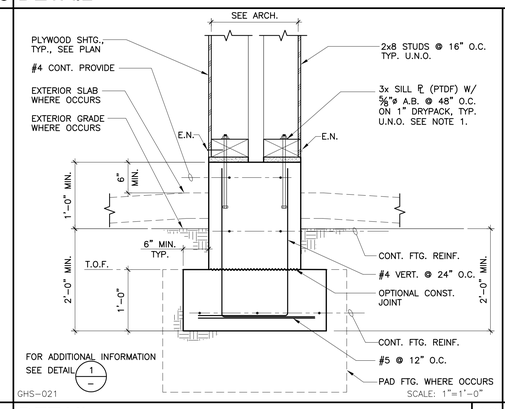

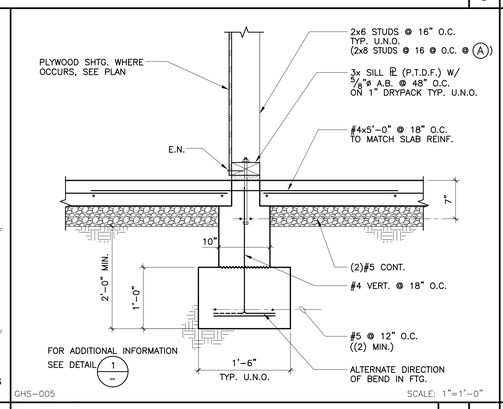

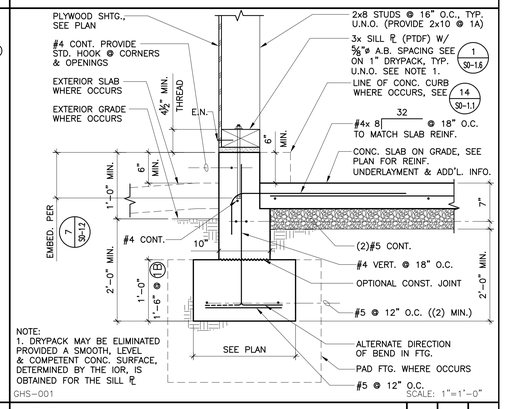

18 | 14 | DETAIL | 10 | DETAIL | 6A | 6 | DETAIL | 1B | 1A | 1

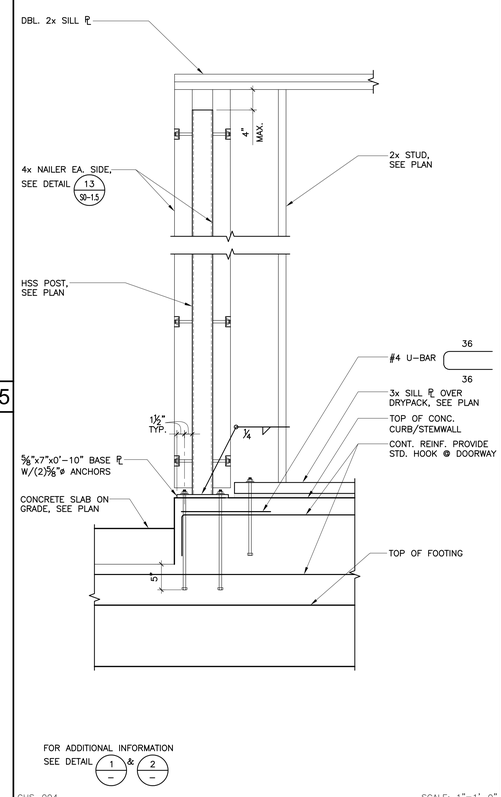

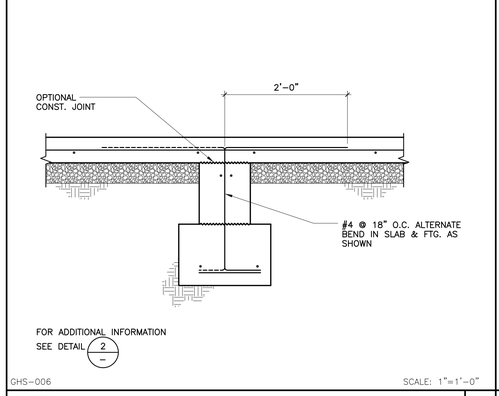

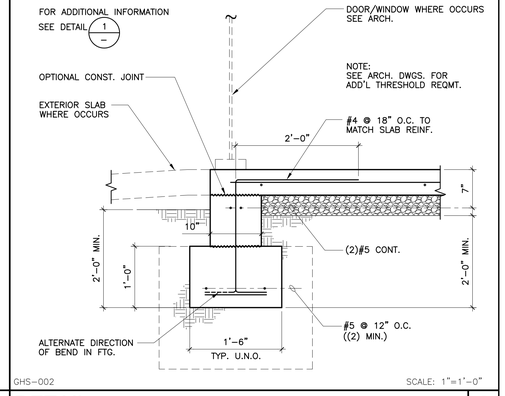

19 | 15 | DETAIL | 7 | DETAIL | 2

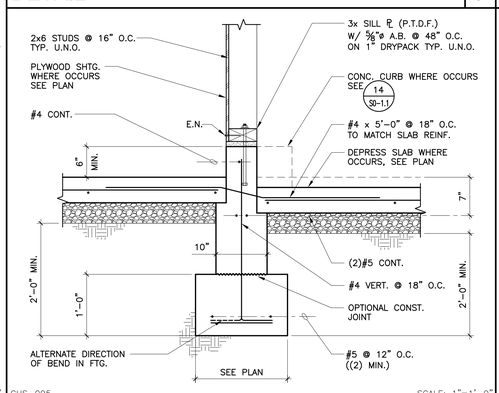

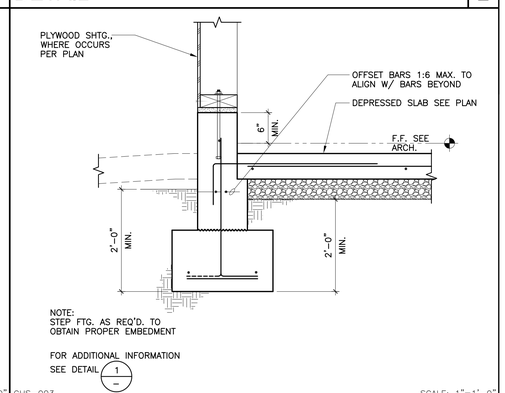

20 | 16 | DETAIL | 12 | DETAIL | 8 | DETAIL | 3

REGISTERED PROFESSIONAL ENGINEER — STEVEN C. KAPP — No. 2795 Exp. 9-30-23 — STRUCTURAL — STATE OF CALIFORNIA

LICENSED ARCHITECT — ROGER CLARKE — No. C-21340 Exp. 10-31-23 — STATE OF CALIFORNIA

STAMPS

IDENTIFICATION STAMP
DIV. OF THE STATE ARCHITECT
APP: 04-120895 INC:
REVIEWED FOR
SS ☑ FLS ☑ ACS ☑
DATE: 06/27/2022
AGENCY: DSA
File No:37.n4 A04-120895

KNA STRUCTURAL ENGINEERS
9931 Muirlands Boulevard, Irvine, CA 92618
WWW.KNAstructural.com
KNA JOB NO: 203.654
CONSULTANT BRANDING

RUHNAU CLARKE ARCHITECTS

PROJECT No. : 1-30-55
6/21/2022 10:27 AM

DRAWN BY: CHECKED BY:

ISSUE No.	DATE	DESCRIPTION	REVISION No.	DATE	DESCRIPTION
ISSUE No.	DATE	DESCRIPTION	REVISION No.	DATE	DESCRIPTION
ISSUE No.	DATE	DESCRIPTION	REVISION No.	DATE	DESCRIPTION
ISSUE No.	DATE	DESCRIPTION	REVISION No.	DATE	DESCRIPTION

RUHNAUCLARKE.COM
3775 TENTH STREET, RIVERSIDE CALIFORNIA 92501 (951) 684 4664 / 5751 PALMER WAY, SUITE C, CARLSBAD CALIFORNIA 92010 (760) 438 5899

GHS KITCHEN & WEIGHTROOM MOD
GROSSMONT HIGH SCHOOL
1100 MURRAY DR, EL CAJON, CA 92020
GROSSMONT UNION HIGH SCHOOL

FOUNDATION DETAILS

SD-1.1

1-30-55

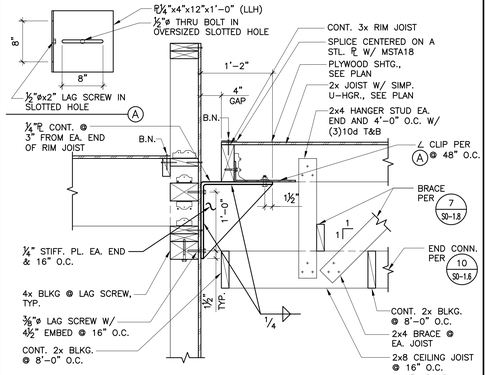

GHS-059 SCALE: 1"=1'-0"

DETAIL 17

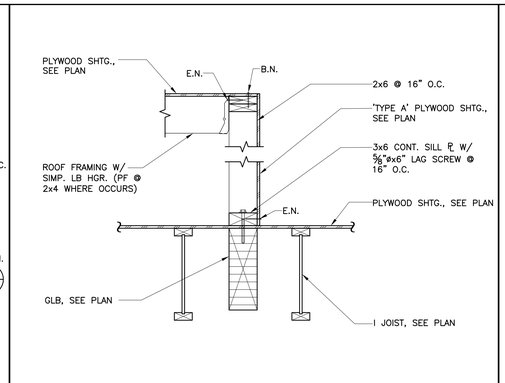

GHS-026 SCALE: 1"=1'-0"

DETAIL 13

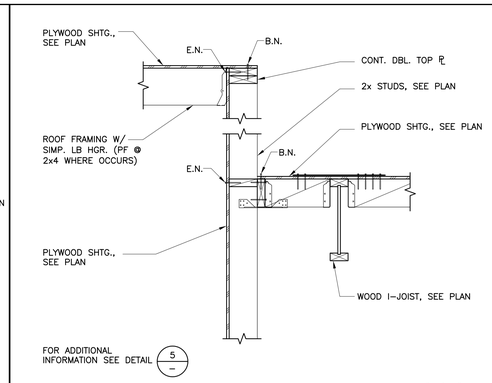

GHS-022 SCALE: 1"=1'-0"

DETAIL 9

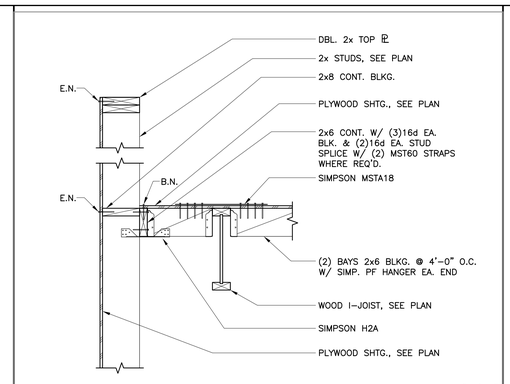

GHS-010 SCALE: 1"=1'-0"

DETAIL 5

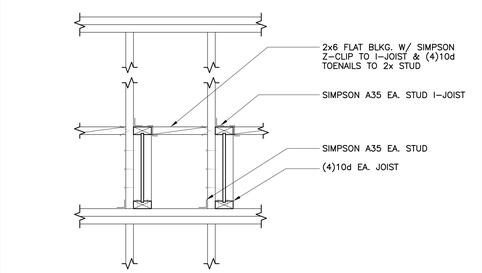

GHS-060 SCALE: 1"=1'-0"

DETAIL 18

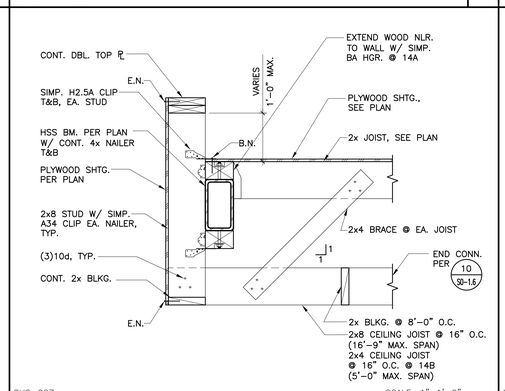

GHS-027 SCALE: 1"=1'-0"

DETAIL 14B 14A 14

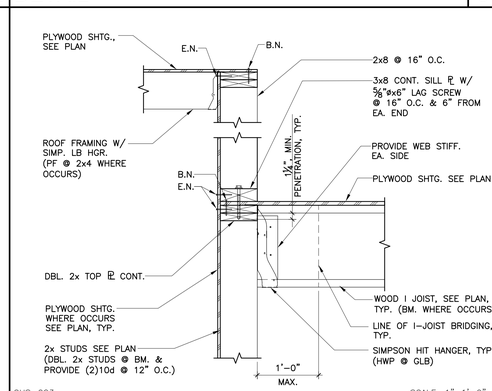

GHS-023 SCALE: 1"=1'-0"

DETAIL 10

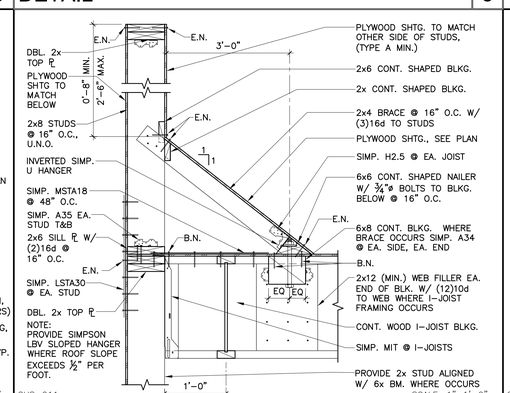

GHS-011 SCALE: 1"=1'-0"

DETAIL 6

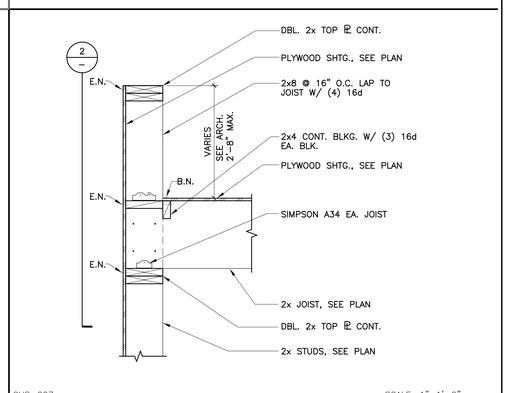

GHS-007 SCALE: 1"=1'-0"

DETAIL 1

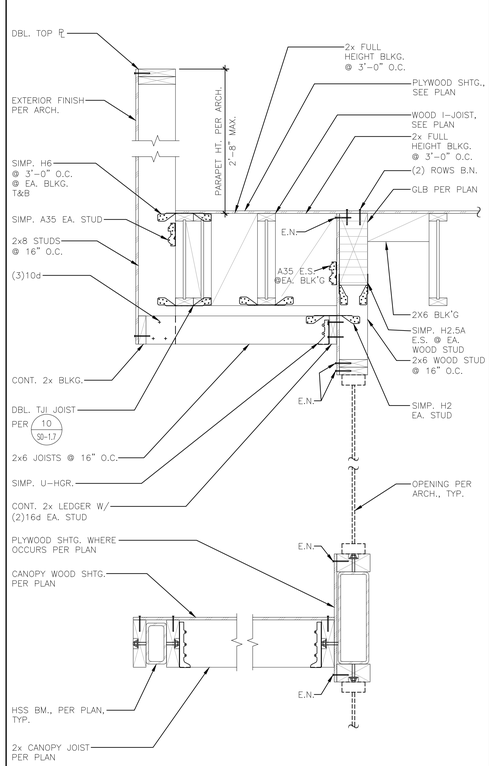

GHS-044 SCALE: 1"=1'-0"

DETAIL 20

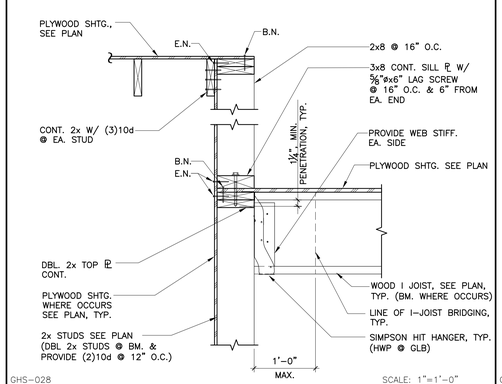

GHS-028 SCALE: 1"=1'-0"

DETAIL 15

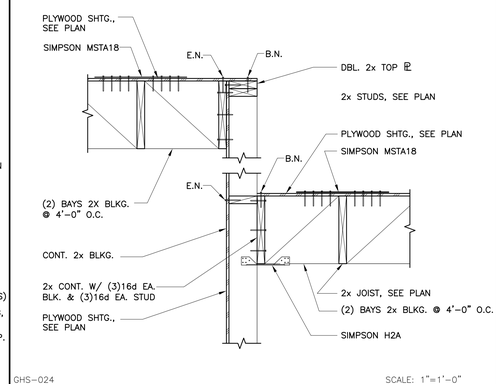

GHS-024 SCALE: 1"=1'-0"

DETAIL 11

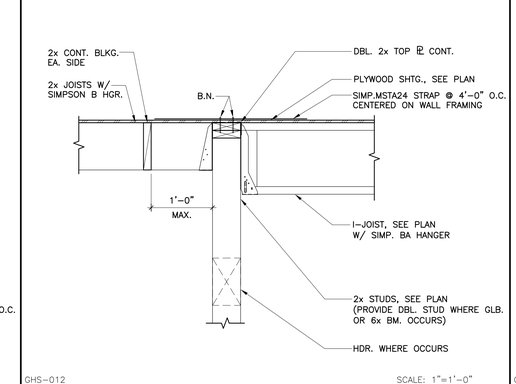

GHS-012 SCALE: 1"=1'-0"

DETAIL 7

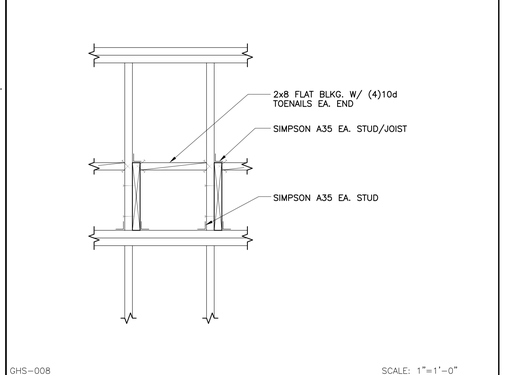

GHS-008 SCALE: 1"=1'-0"

DETAIL 2

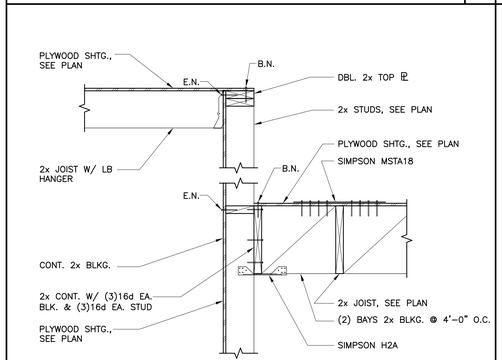

GHS-029 SCALE: 1"=1'-0"

DETAIL 16

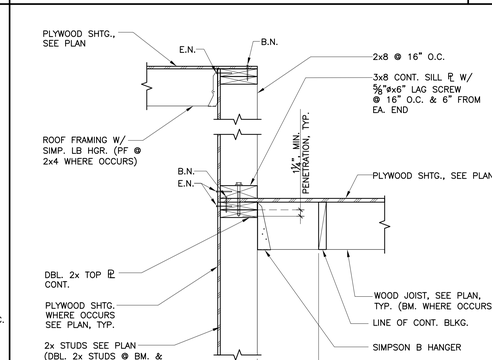

GHS-025 SCALE: 1"=1'-0"

DETAIL 12

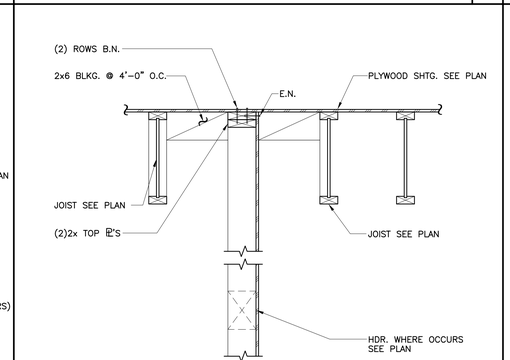

GHS-013 SCALE: 1"=1'-0"

DETAIL 8

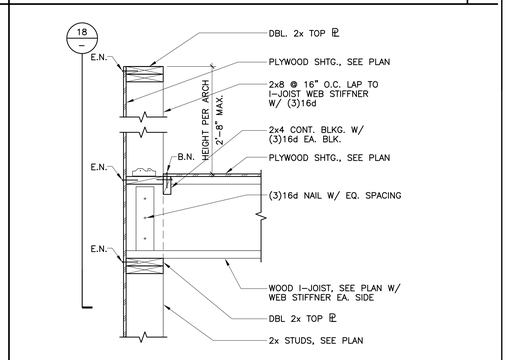

GHS-009 SCALE: 1"=1'-0"

DETAIL 3

STAMPS

IDENTIFICATION STAMP
DIV. OF THE STATE ARCHITECT
APP: 04-120895 INC:
REVIEWED FOR
SS ☑ FLS ☑ ACS ☑
DATE: 06/27/2022

KNA STRUCTURAL ENGINEERS
9931 Muirlands Boulevard, Irvine, CA 92618
WWW.KNAstructural.com

KNA JOB NO: 203.654
CONSULTANT BRANDING

RUHNAU CLARKE ARCHITECTS

PROJECT No. : 1-30-55
6/21/2022 10:27 AM

DRAWN BY: CHECKED BY:

ISSUE No.	DATE	DESCRIPTION	REVISION No.	DATE	DESCRIPTION
ISSUE No.	DATE	DESCRIPTION	REVISION No.	DATE	DESCRIPTION
ISSUE No.	DATE	DESCRIPTION	REVISION No.	DATE	DESCRIPTION
ISSUE No.	DATE	DESCRIPTION	REVISION No.	DATE	DESCRIPTION

RUHNAUCLARKE.COM
3775 TENTH STREET, RIVERSIDE CALIFORNIA 92501 (951) 684 4664 / 5751 PALMER WAY, SUITE C, CARLSBAD CALIFORNIA 92010 (760) 438 5890

GHS KITCHEN & WEIGHTROOM MOD
GROSSMONT HIGH SCHOOL
1100 MURRAY DR, EL CAJON, CA 92020
GROSSMONT UNION HIGH SCHOOL

ROOF FRAMING DETAILS

SD-2.1

1-30-55

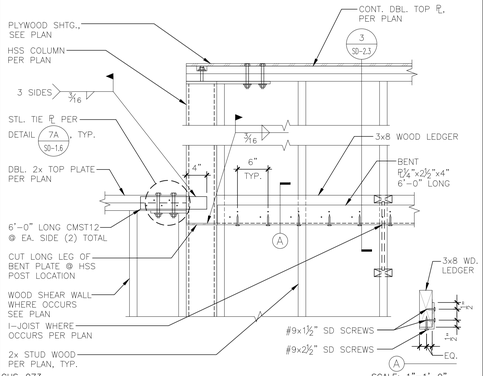

GHS-073 SCALE: 1"=1'-0"

DETAIL 17

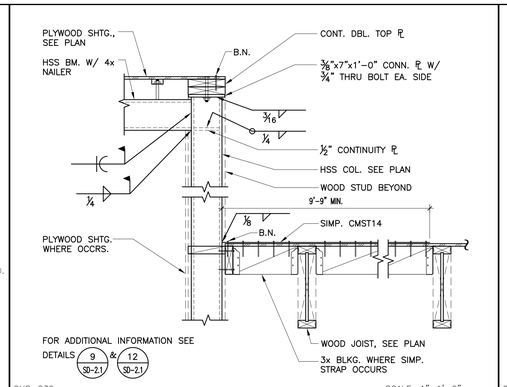

GHS-039 SCALE: 1"=1'-0"

DETAIL 13

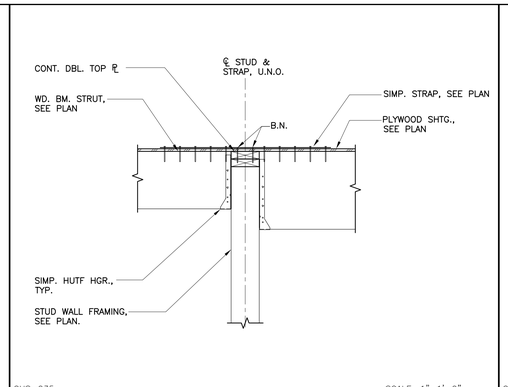

GHS-035 SCALE: 1"=1'-0"

DETAIL 9

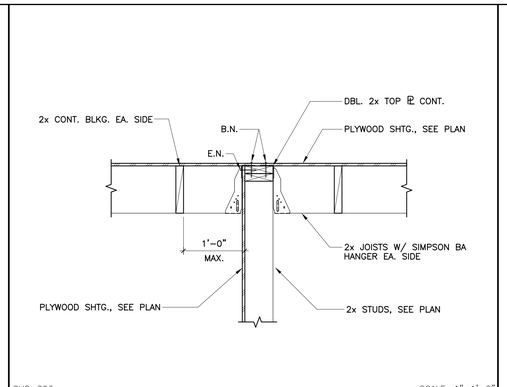

GHS-096 SCALE: 1"=1'-0"

DETAIL 5

STAMPS

IDENTIFICATION STAMP
DIV. OF THE STATE ARCHITECT
APP: 04-120895 INC:
REVIEWED FOR
SS ☑ FLS ☑ ACS ☑
DATE: 06/27/2022
File No:37.ms A04-120895

KNA STRUCTURAL ENGINEERS
9931 Muirlands Boulevard, Irvine, CA 92618
WWW.KNAstructural.com
KNA JOB NO: 203.654
CONSULTANT BRANDING

RUHNAU CLARKE ARCHITECTS

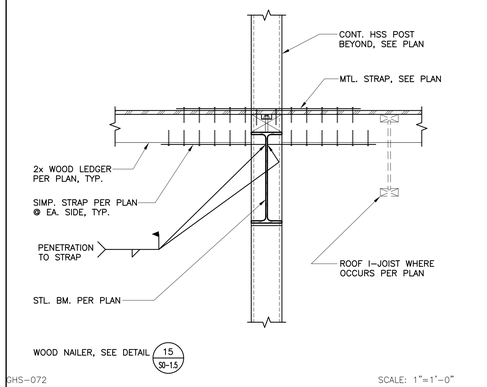

GHS-072 SCALE: 1"=1'-0"

DETAIL 18

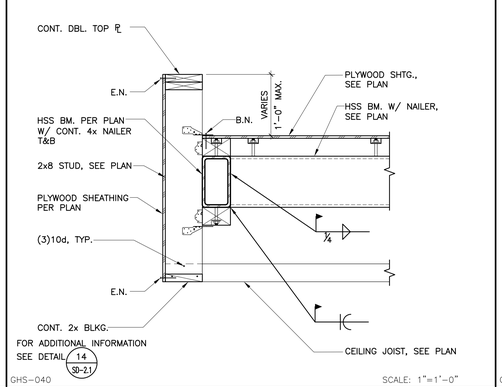

GHS-040 SCALE: 1"=1'-0"

DETAIL 14

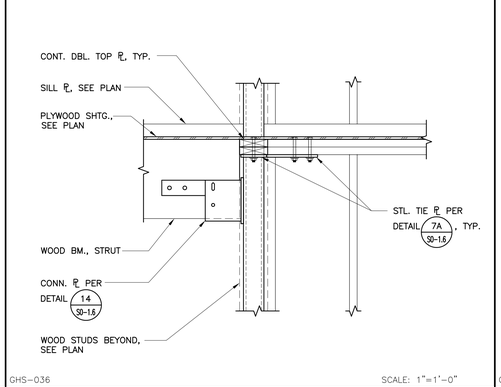

GHS-036 SCALE: 1"=1'-0"

DETAIL 10

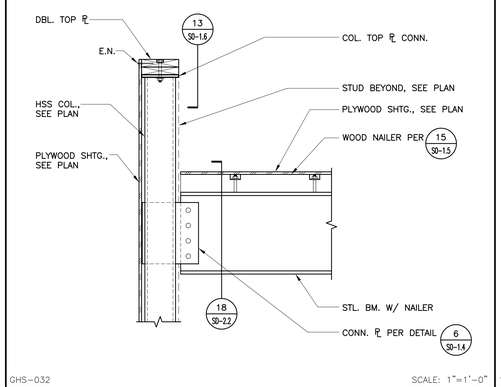

GHS-032 SCALE: 1"=1'-0"

DETAIL 6

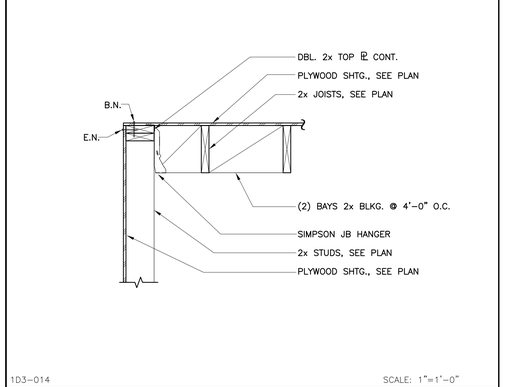

1D3-014 SCALE: 1"=1'-0"

DETAIL 1

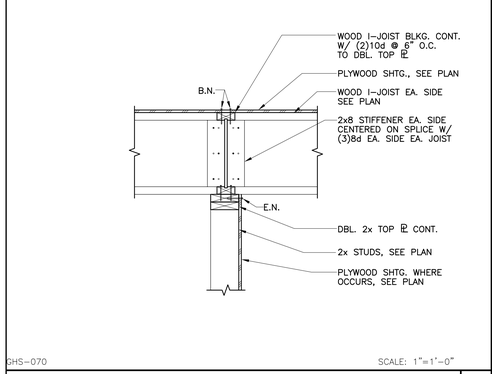

GHS-070 SCALE: 1"=1'-0"

DETAIL 19

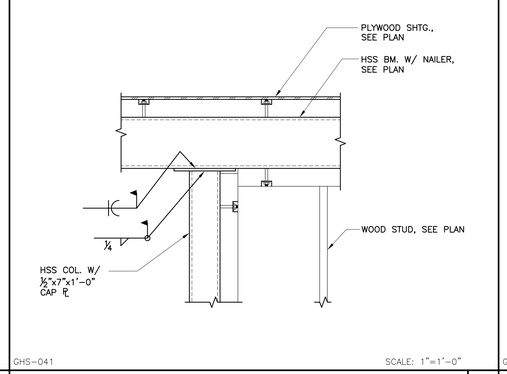

GHS-041 SCALE: 1"=1'-0"

DETAIL 15

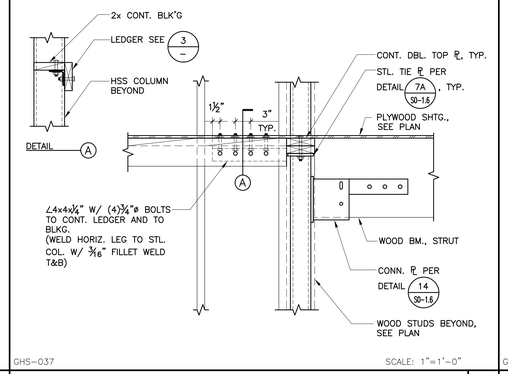

GHS-037 SCALE: 1"=1'-0"

DETAIL 11

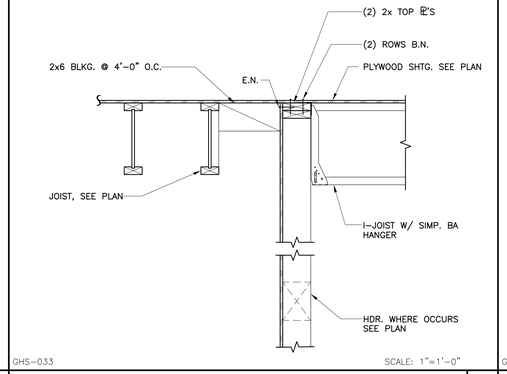

GHS-033 SCALE: 1"=1'-0"

DETAIL 7

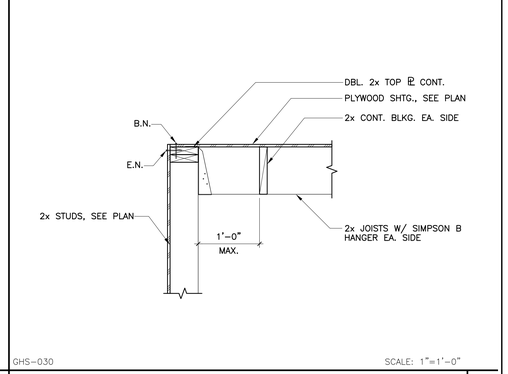

GHS-030 SCALE: 1"=1'-0"

DETAIL 2

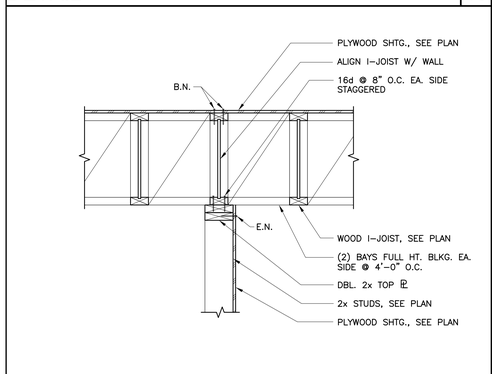

GHS-071 SCALE: 1"=1'-0"

DETAIL 20

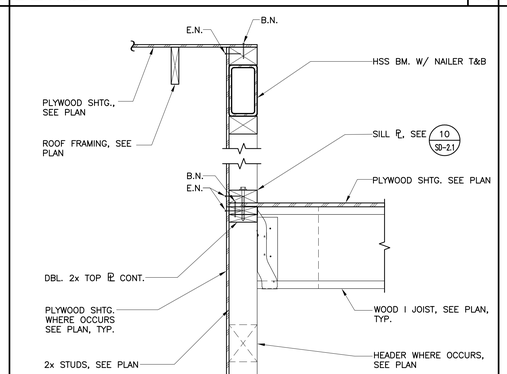

GHS-042 SCALE: 1"=1'-0"

DETAIL 16

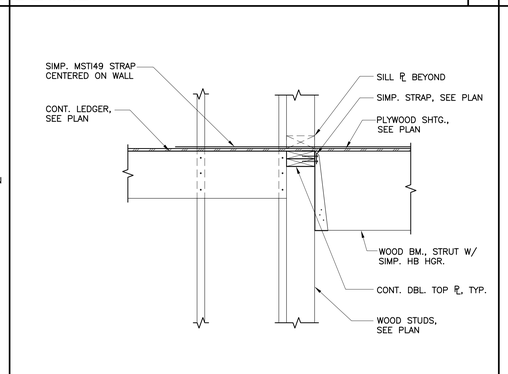

GHS-038 SCALE: 1"=1'-0"

DETAIL 12

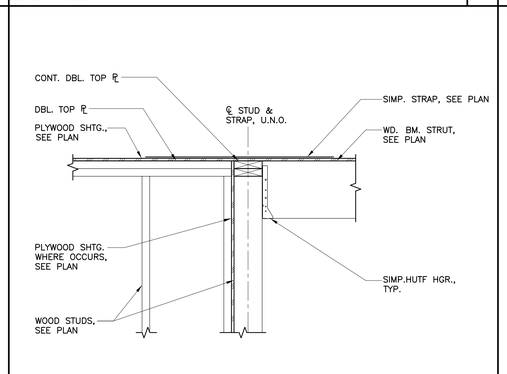

GHS-034 SCALE: 1"=1'-0"

DETAIL 8

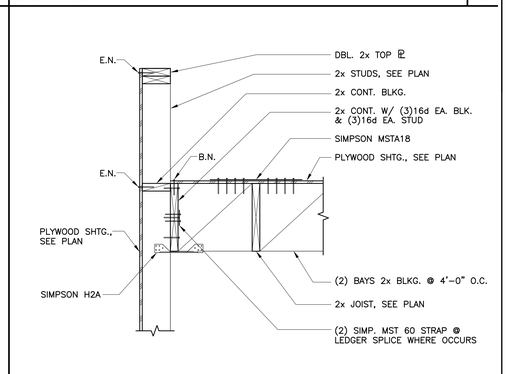

GHS-031 SCALE: 1"=1'-0"

DETAIL 3

PROJECT No. : 1-30-55
6/21/2022 10:27 AM

DRAWN BY: CHECKED BY:

ISSUE No.	DATE	DESCRIPTION	REVISION No.	DATE	DESCRIPTION
ISSUE No.	DATE	DESCRIPTION	REVISION No.	DATE	DESCRIPTION
ISSUE No.	DATE	DESCRIPTION	REVISION No.	DATE	DESCRIPTION
ISSUE No.	DATE	DESCRIPTION	REVISION No.	DATE	DESCRIPTION

RUHNAUCLARKE.COM
3775 TENTH STREET, RIVERSIDE CALIFORNIA 92501 (951) 684 4664 / 5751 PALMER WAY, SUITE C, CARLSBAD CALIFORNIA 92010 (760) 438 5899

GHS KITCHEN & WEIGHTROOM MOD
GROSSMONT HIGH SCHOOL
1100 MURRAY DR., EL CAJON, CA 92020
GROSSMONT UNION HIGH SCHOOL

ROOF FRAMING DETAILS

SD-2.2

1-30-55

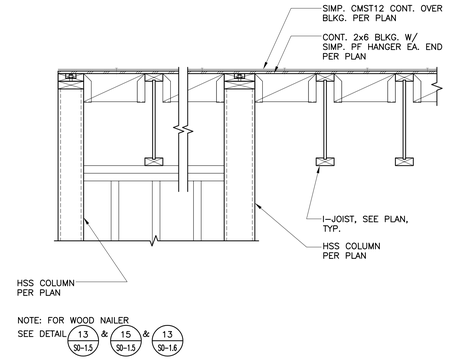

GHS-074 SCALE: 1"=1'-0"

DETAIL 17

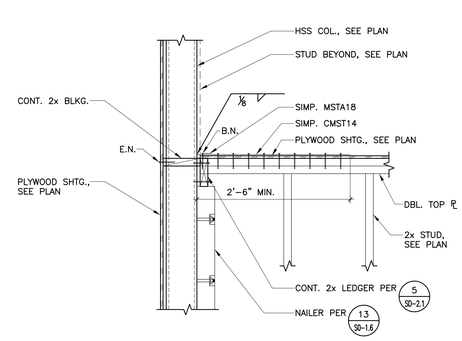

GHS-088 SCALE: 1"=1'-0"

DETAIL 13

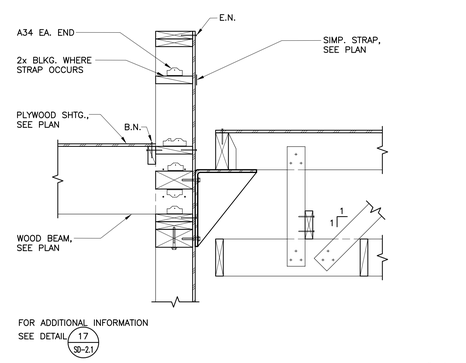

GHS-089 SCALE: 1"=1'-0"

DETAIL 9

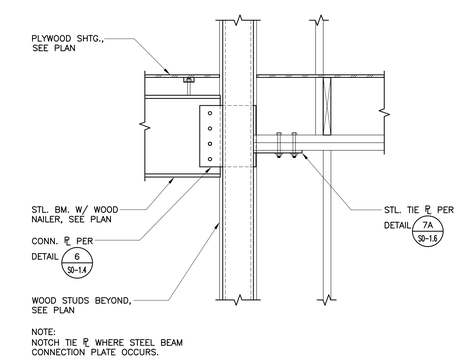

GHS-046 SCALE: 1"=1'-0"

DETAIL 5

REGISTERED PROFESSIONAL ENGINEER — No. 2795 Exp. 9-30-23 — STRUCTURAL — STATE OF CALIFORNIA

LICENSED ARCHITECT — ROGER CLARKE — No. C-21340 Exp. 10-31-23 — STATE OF CALIFORNIA

STAMPS

IDENTIFICATION STAMP
DIV. OF THE STATE ARCHITECT
APP: 04-120895 INC:
REVIEWED FOR
SS ☑ FLS ☑ ACS ☑
DATE: 06/27/2022
AGENCY: DSA-SS
File No:37.n4 A04-120895

KNA STRUCTURAL ENGINEERS
9931 Muirlands Boulevard, Irvine, CA 92618
WWW.KNAstructural.com

KNA JOB NO: 203.654
CONSULTANT BRANDING

RUHNAU CLARKE ARCHITECTS

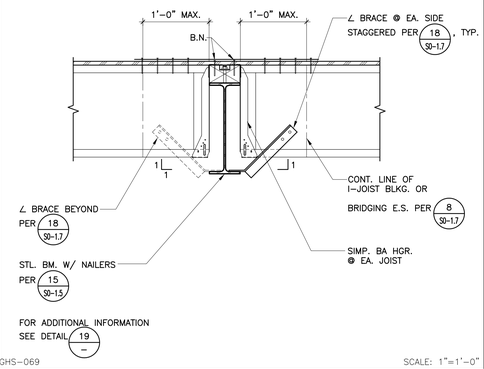

GHS-069 SCALE: 1"=1'-0"

DETAIL 18

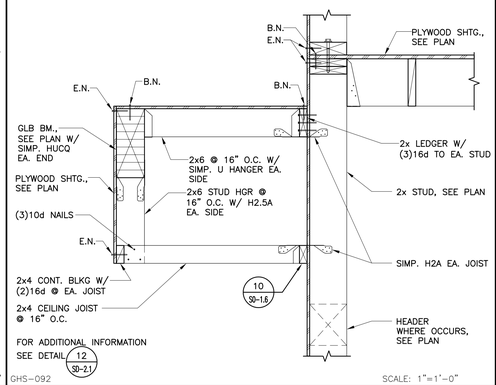

GHS-092 SCALE: 1"=1'-0"

DETAIL 14

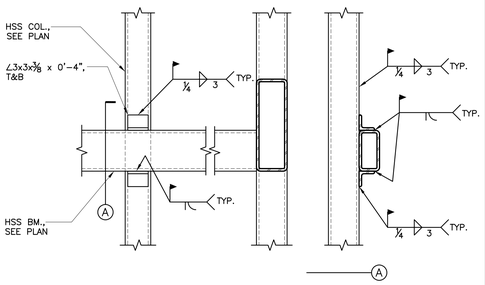

NOTE:
WOOD FRAMING NOT SHOWN FOR CLARITY.
SEE DETAILS 8/SD-1.4 & 9/SD-1.4 FOR CONNECTION BTW. HSS MEMBER.

GHS-051 SCALE: 1"=1'-0"

DETAIL 10

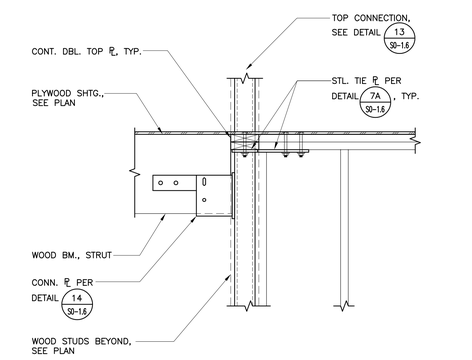

GHS-047 SCALE: 1"=1'-0"

DETAIL 6

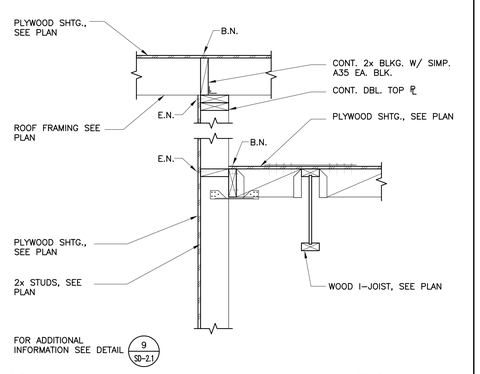

GHS-043 SCALE: 1"=1'-0"

DETAIL 1

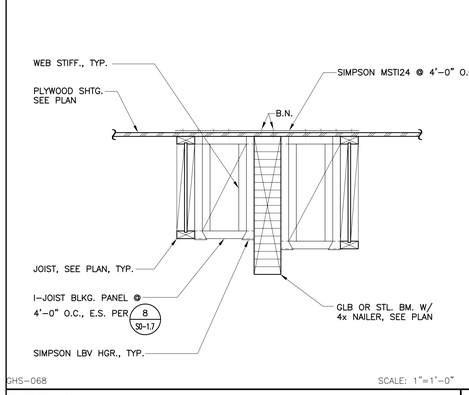

GHS-068 SCALE: 1"=1'-0"

DETAIL 19

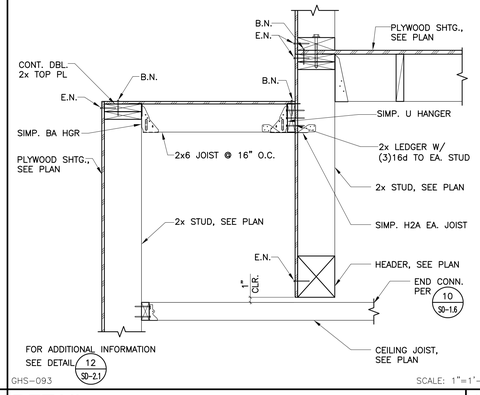

GHS-093 SCALE: 1"=1'-0"

DETAIL 15

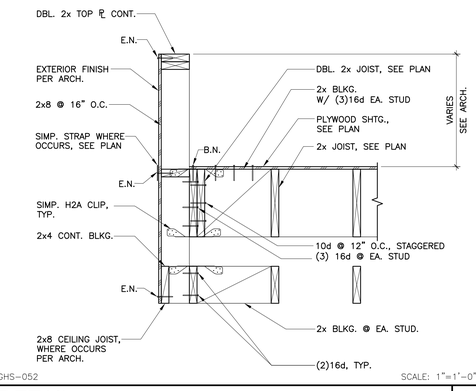

GHS-052 SCALE: 1"=1'-0"

DETAIL 11

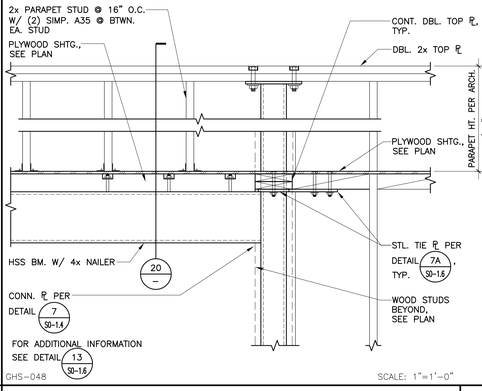

GHS-048 SCALE: 1"=1'-0"

DETAIL 7

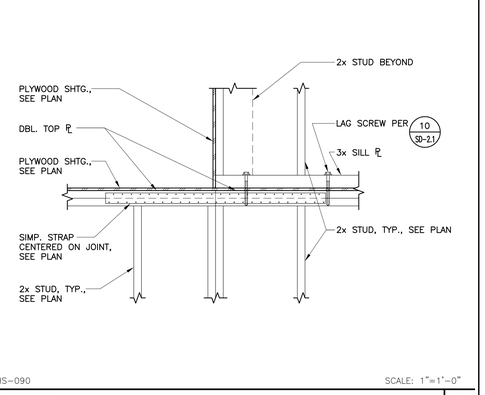

GHS-090 SCALE: 1"=1'-0"

DETAIL 2

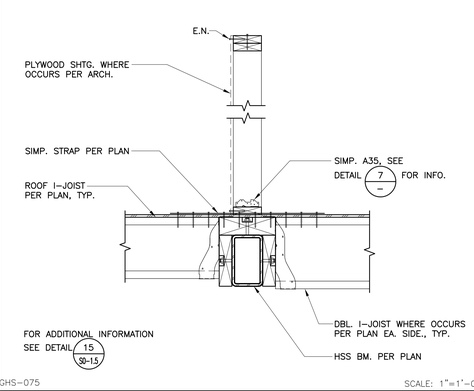

GHS-075 SCALE: 1"=1'-0"

DETAIL 20

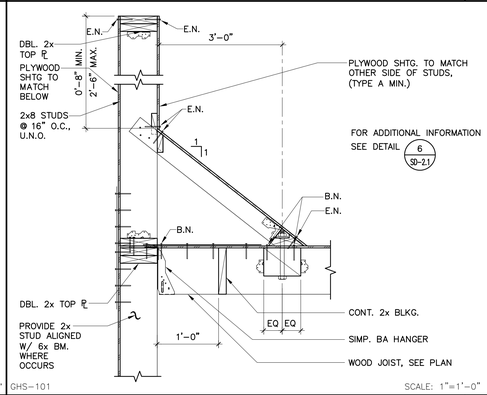

GHS-101 SCALE: 1"=1'-0"

DETAIL 16

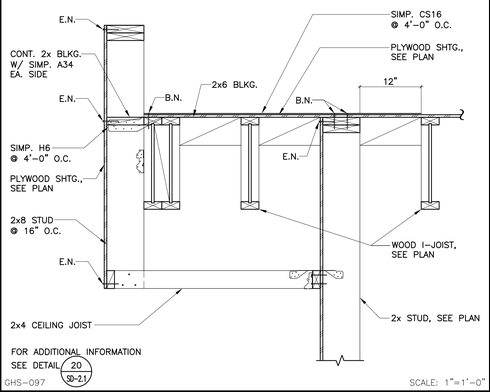

GHS-097 SCALE: 1"=1'-0"

DETAIL 12

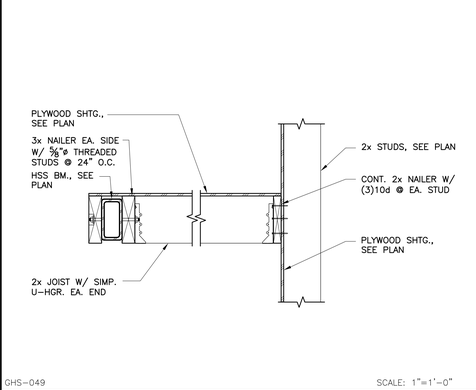

GHS-049 SCALE: 1"=1'-0"

DETAIL 8

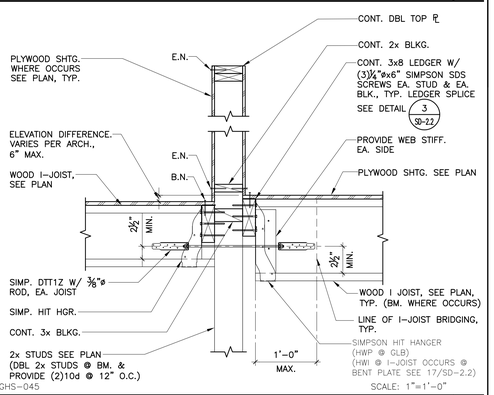

GHS-045 SCALE: 1"=1'-0"

DETAIL 3

PROJECT No. :1-30-55
6/21/2022 10:27 AM

DRAWN BY: CHECKED BY:

ISSUE No.	DATE	DESCRIPTION	REVISION No.	DATE	DESCRIPTION
ISSUE No.	DATE	DESCRIPTION	REVISION No.	DATE	DESCRIPTION
ISSUE No.	DATE	DESCRIPTION	REVISION No.	DATE	DESCRIPTION
ISSUE No.	DATE	DESCRIPTION	REVISION No.	DATE	DESCRIPTION

RUHNAUCLARKE.COM
3775 TENTH STREET, RIVERSIDE CALIFORNIA 92501 (951) 684 4664 / 5751 PALMER WAY, SUITE C, CARLSBAD CALIFORNIA 92010 (760) 438 5899

GHS KITCHEN & WEIGHTROOM MOD
GROSSMONT HIGH SCHOOL
1100 MURRAY DR, EL CAJON, CA 92020
GROSSMONT UNION HIGH SCHOOL

ROOF FRAMING DETAILS

SD-2.3

1-30-55

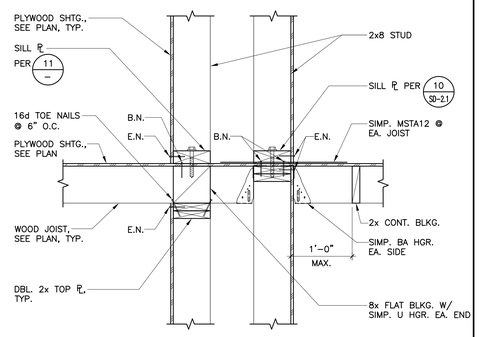

GHS-100 SCALE: 1"=1'-0"

17 DETAIL 13

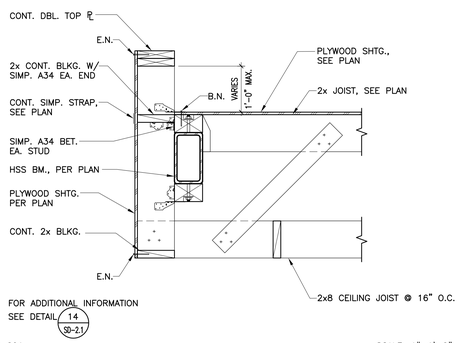

GHS-091 SCALE: 1"=1'-0"

9 DETAIL

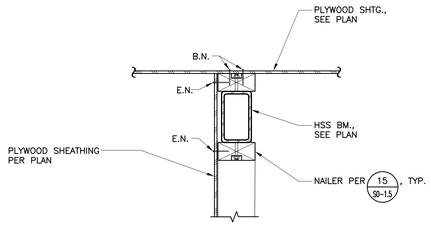

GHS-080 SCALE: 1"=1'-0"

5 DETAIL

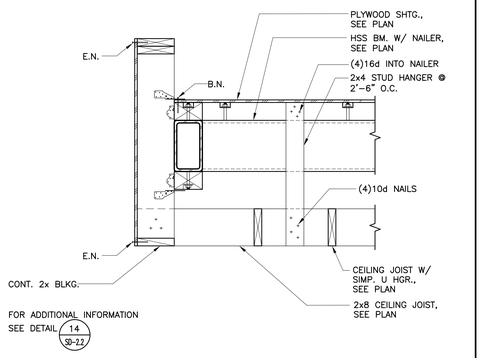

GHS-103 SCALE: 1"=1'-0"

18 DETAIL 14

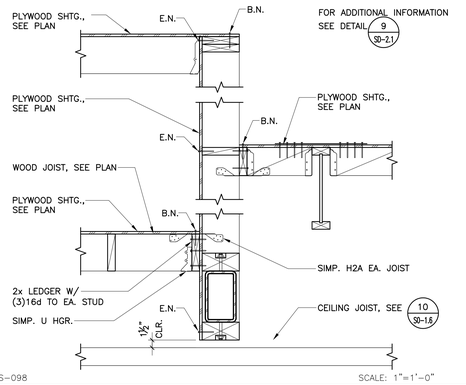

GHS-098 SCALE: 1"=1'-0"

10 DETAIL

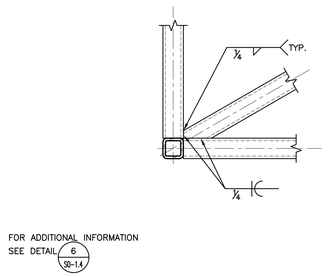

GHS-083 SCALE: 1"=1'-0"

6 DETAIL

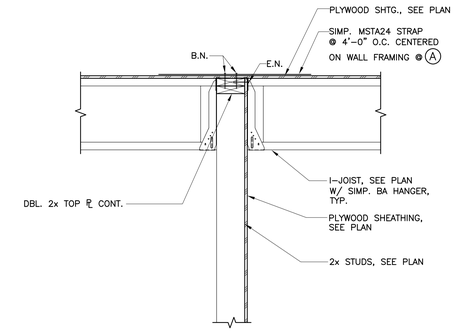

GHS-077 SCALE: 1"=1'-0"

1A DETAIL 1

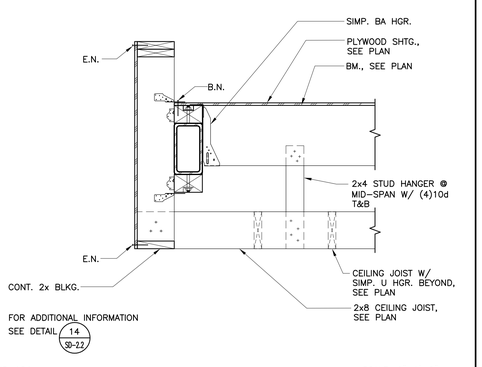

GHS-104 SCALE: 1"=1'-0"

19 DETAIL 15

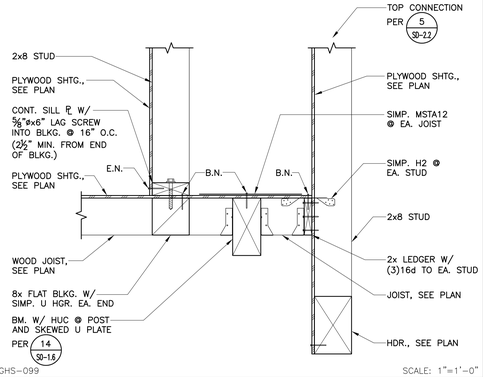

GHS-099 SCALE: 1"=1'-0"

11 DETAIL

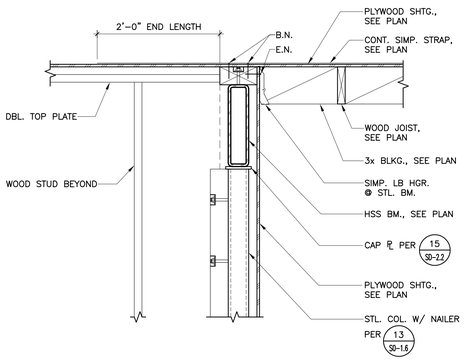

GHS-084 SCALE: 1"=1'-0"

7 DETAIL

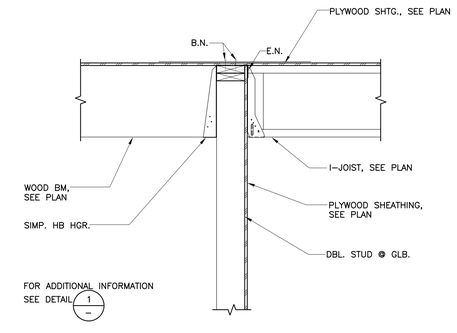

GHS-078 SCALE: 1"=1'-0"

2 DETAIL

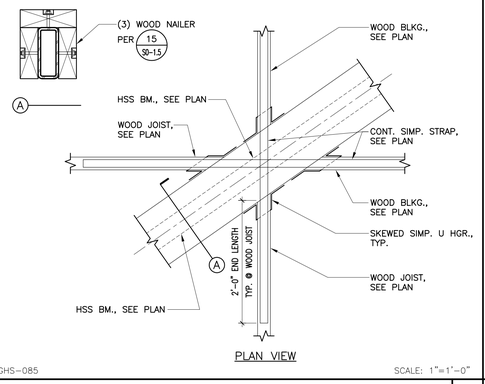

GHS-085 SCALE: 1"=1'-0"

8 DETAIL

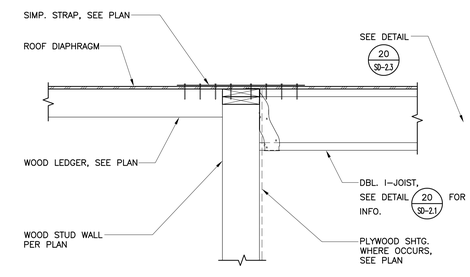

GHS-102 SCALE: 1"=1'-0"

3 DETAIL

20 16 12

IDENTIFICATION STAMP
DIV. OF THE STATE ARCHITECT
APP: 04-120895 INC:
REVIEWED FOR
SS ☑ FLS ☑ ACS ☑
DATE: 06/27/2022

KNA STRUCTURAL ENGINEERS
9931 Muirlands Boulevard, Irvine, CA 92618
WWW.KNAstructural.com

KNA JOB NO: 203.654
CONSULTANT BRANDING

RUHNAU CLARKE ARCHITECTS

PROJECT No. : 1-30-55
6/21/2022 10:27 AM

DRAWN BY: CHECKED BY:

ISSUE No.	DATE	DESCRIPTION	REVISION No.	DATE	DESCRIPTION
ISSUE No.	DATE	DESCRIPTION	REVISION No.	DATE	DESCRIPTION
ISSUE No.	DATE	DESCRIPTION	REVISION No.	DATE	DESCRIPTION
ISSUE No.	DATE	DESCRIPTION	REVISION No.	DATE	DESCRIPTION

RUHNAUCLARKE.COM
3775 TENTH STREET, RIVERSIDE CALIFORNIA 92501 (951) 684 4664 / 5751 PALMER WAY, SUITE C, CARLSBAD CALIFORNIA 92010 (760) 438 5899

GHS KITCHEN & WEIGHTROOM MOD
GROSSMONT HIGH SCHOOL
1100 MURRAY DR., EL CAJON, CA 92020
GROSSMONT UNION HIGH SCHOOL

ROOF FRAMING DETAILS

SD-2.4

1-30-55

MECHANICAL LEGEND

SYMBOL	ABBREV	DESCRIPTION
		REMOVE EXISTING WORK HATCHED AND SHOWN DASHED
	POC	POINT OF CONNECTION
	POD	POINT OF DISCONNECT
E		COORDINATE WITH ELECTRICAL
DS HP-#	DS	DUCT SENSOR (NUMBER INDICATES EQUIPMENT ZONE SERVED)
T AC-#	T'STAT	THERMOSTAT OR TEMPERATURE SENSOR (NUMBER INDICATES EQUIPMENT ZONE SERVED)
H	H'STAT	HUMIDISTAT
CO		CARBON MONOXIDE SENSOR
C2		CARBON DIOXIDE SENSOR
¢	CFM	CUBIC FEET PER MINUTE
ø	DIA	DIAMETER
OR		SYMBOL, SEE EQUIPMENT SCHEDULE
	HHWS	HEATING HOT WATER SUPPLY
	HHWR	HEATING HOT WATER RETURN
	CHW	CHILLED WATER
	CHWR	CHILLED WATER RETURN
	CHWS	CHILLED WATER SUPPLY
	CD	CONDENSATE DRAIN (A.C.)
	CWR	CONDENSER WATER RETURN
	CWS	CONDENSER WATER SUPPLY
	D	DRAIN
	S	STEAM
	LPS	LOW PRESSURE STEAM
	MPS	MEDIUM PRESSURE STEAM
	HPW	HIGH PRESSURE STEAM
	CR	STEAM CONDENSATE RETURN
	RD	REFRIGERANT DISCHARGE
	RL	REFRIGERANT LIQUID
	RS	REFRIGERANT SUCTION
		PIPE UP
		PIPE DOWN
	AV	AIR VENT (VALVE)
	CHV	CHECK VALVE
S	SD	SUCTION DIFFUSER
	CV (2W)	CONTROL VALVE (2-WAY)
	CV (3W)	CONTROL VALVE (3-WAY)
	FCD	AUTOMATIC FLOW CONTROL DEVICE
	SOV	SHUT-OFF VALVE
	BV	COMBINATION BALANCING & SHUT-OFF VALVE
	FEV	FLOW ELEMENT VENTURI
		VALVE ON RISE OR DROP
	STR	STRAINER
	CL	CAPPED LINE
	UP	RISE OR RISER
	DN	DOWN OR DROP
	RV	PRESSURE RELIEF VALVE
	PG	PRESSURE GAUGE WITH BALL VALVE
	FC	FLEXIBLE CONNECTION (PIPE)
	TW	TEST WELL (PETE'S PLUG) - PRESSURE AND/OR TEMPERATURE
	TI	THERMOMETER
	PA	PIPE ANCHOR
	U	UNION

SYMBOL	ABBREV	DESCRIPTION
	CD	CEILING DIFFUSER
	RR	RETURN REGISTER
	ER	EXHAUST REGISTER
	SA	SA DUCT UP (RECTANGULAR)
	SA	SA DUCT DOWN (RECTANGULAR)
	RA/OA	RA/OA DUCT UP (RECTANGULAR)
	RA/OA	RA/OA DUCT DOWN (RECTANGULAR)
	EA	EA DUCT UP (RECTANGULAR)
	EA	EA DUCT DOWN (RECTANGULAR)
	SA	SA DUCT UP (ROUND)
	SA	SA DUCT DOWN (ROUND)
	RA/OA	RA/OA DUCT UP (ROUND)
	RA/OA	RA/OA DUCT DOWN (ROUND)
	EA	EA DUCT UP (ROUND)
	EA	EA DUCT DOWN (ROUND)
24"x12" 18"x12"		RECTANGULAR DUCT TRANSITION
24"ø 18"ø		ROUND DUCT TRANSITION
24"x24" 18"ø		RECTANGULAR TO ROUND DUCT TRANSITION
24"x12"		DUCTWORK (1ST NUMBER INDICATES WIDTH SHOWN), NET INSIDE DIMENSION
	TV	SQUARE ELBOW WITH TURNING VANES
		RADIUS ELBOW
	MVD	MANUAL VOLUME DAMPER
M	MOD	MOTOR OPERATED DAMPER
BD	BDD	BACKDRAFT DAMPER
FD	FD	FIRE DAMPER
SFD	SFD	AUTOMATIC SMOKE AND FIRE DAMPER
SD	SD	DUCT MOUNTED SMOKE DETECTOR
	FLEX	FLEXIBLE CONNECTION (DUCTWORK)
	FLEX	FLEXIBLE CONNECTION OR SEISMIC JOINT
		LINED DUCTWORK (OR PLENUM)

SYMBOL	ABBREV	DESCRIPTION
	AD/AP	ACCESS DOOR / ACCESS PANEL
	AFF	ABOVE FINISHED FLOOR
	AMB	AMBIENT
	AFUE	ANNUAL FUEL UTILIZATION EFFICIENCY
	BOD	BOTTOM OF DUCT
	BOP	BOTTOM OF PIPE (AFF)
	BHP	BRAKE HORSE POWER
	CAP	CAPACITY
	CLG	CEILING
	CD	CEILING DIFFUSER
	CONC	CONCRETE
	CONT	CONTINUATION
	°F	DEGREES FAHRENHEIT
	DBA	A-WEIGHTED DECIBELS
	DN	DOWN
	DWGS	DRAWINGS
	DB	DRY BULB
	DTR	DUCT THROUGH ROOF
	EDB	ENTERING DRY BULB
	(E)	EXISTING
	EA	EXHAUST AIR
	ER	EXHAUST REGISTER
	EFF	EFFICIENCY
	ELEV	ELEVATION
	EER	ENERGY EFFICIENCY RATIO
	ESP	EXTERNAL STATIC PRESSURE
	ENT	ENTERING
	EWB	ENTERING WET BULB
	EWT	ENTERING WATER TEMPERATURE
	EXH	EXHAUST
	EXIST	EXISTING
	FF	FINISHED FLOOR
	FIN	FINISH
	FLR	FLOOR
	FT	FEET
	GAL	GALLON
	GPM	GALLONS PER MINUTE
	HOA	HAND-OFF-AUTOMATIC
	HD	HEAD
	Hz	HERTZ
	HP	HORSEPOWER
	IN	INCH
	IEER	INTEGRATED ENERGY EFFICIENCY RATIO
	LVG	LEAVING
	LWT	LEAVING WATER TEMPERATURE
	LD	LINEAR DIFFUSER
	LRA	LOCKED ROTOR AMPS
	MAX	MAXIMUM
	MOCP	MAXIMUM OVERCURRENT PROTECTION
	MBH	ONE THOUSAND B.T.U.'S PER HOUR
	MECH	MECHANICAL
	MIN	MINIMUM
	MCA	MINIMUM CIRCUIT AMPS
	MTD	MOUNTED
	MTG	MOUNTING
	NG	NATURAL GAS
	NC	NORMALLY CLOSED
	NO	NORMALLY OPEN
	OPER	OPERATING
	OA	OUTSIDE AIR
	PH	PHASE
	LBS	POUNDS
	PSIG	POUNDS PER SQUARE INCH GAUGE
	PD	PRESSURE DROP
	RLA	RATED LOAD AMPS
	REF	REFRIGERANT
	REG	REGISTER
	RR	RETURN REGISTER
	RA	RETURN AIR
	RPM	REVOLUTIONS PER MINUTE
	SENS	SENSIBLE
	SS	STAINLESS STEEL
	ST	STEAM
	SA	SUPPLY AIR
	SF	SQUARE FEET
	TEMP	TEMPERATURE
	TYP	TYPICAL
	UNO	UNLESS NOTED OTHERWISE
	UOS	UNLESS OTHERWISE SPECIFIED
	UTR	UP THROUGH ROOF
	VAV	VARIABLE AIR VOLUME
	VFD	VARIABLE FREQUENCY DRIVE
	VTR	VENT THROUGH ROOF
	V	VOLTS
	WG	WATER GAUGE
	WB	WET BULB
	W/	WITH

PLAN CHECK NOTES

1. ALL HVAC EQUIPMENT AND APPLIANCES SHALL MEET THE REQUIREMENTS PER SECTION 110.1-110.3, 110.5, 120.1-120.4 TITLE 24 ENERGY STANDARDS 2019.
2. PROVIDE SMOKE DETECTORS IN MAIN SUPPLY AIR DUCTS OF AIR MOVING SYSTEMS EXCEEDING 2000 CFM PER SECTION 608.0 CMC 2019.
3. EXHAUST DUCTS SHALL BE EQUIPPED WITH BACK-DRAFT DAMPERS PER SEC. 504.0 CMC 2019.
4. A WATERTIGHT PAN OF CORROSION RESISTANT MATERIAL SHALL BE PROVIDED BENEATH HVAC UNITS PER SECTION 310.2 CMC 2019.
5. ROOF ACCESS LADDER SHALL COMPLY WITH SECTION 304 CMC 2019.
6. HVAC DUCT INSULATION SHALL BE R-8 AT EXTERIOR INSTALLED DUCTWORK.
7. FACTORY MADE FLEXIBLE AIR DUCTS AND CONNECTORS SHALL NOT BE MORE THAN 5 FEET IN LENGTH PER SECTION 603.4.1 CMC 2019.

TITLE 24 NOTES

1. HVAC SYSTEMS SHALL MEET THE LATEST CONTROL REQUIREMENTS OF SECTIONS 110.2 & 120.2 TITLE 24 ENERGY STANDARDS 2019.
2. DOORS AND WINDOWS SHALL MEET MINIMUM INFILTRATION REQUIREMENTS OF SECTION 110.6 AND 110.7 TITLE 24 ENERGY STANDARDS 2019.
3. INSULATION AND FLEXIBLE DUCT SHALL COMPLY WITH STATE FIRE MARSHAL CRITERIA AND SHALL NOT EXCEED FLAME SPREAD OF 25 AND SMOKE DEVELOPED OF 450 PER ASTM-84, NFPA-225, AND U.L. 723.
4. ALL WORK SHALL BE IN ACCORDANCE WITH CITY CODES, CALIFORNIA ENERGY CONSERVATION STANDARDS, TITLE - 24, AND ALL OTHER APPLICABLE CODES.
5. ALL ENVELOPE AND MECHANICAL CERTIFICATE OF ACCEPTANCE FORMS AND ALL RELATED ACCEPTANCE DOCUMENTS SHALL BE SUBMITTED TO THE FIELD INSPECTOR DURING CONSTRUCTION. CERTIFICATE OF OCCUPANCY WILL NOT BE ISSUED UNTIL THESE FORMS ARE REVIEWED AND APPROVED.
6. ALL PIPING AND DUCT WORK SHALL BE INSULATED CONSISTENT WITH THE REQUIREMENTS OF SECTIONS 120.3, 120.4 AND 120.7 TITLE 24 ENERGY STANDARDS 2019 AND CHAPTER 6 OF CMC 2019.

CA GREEN BUILDING NOTES

1. IN MECHANICALLY VENTILATED BUILDINGS, PROVIDE OCCUPIED AREAS OF BUILDING WITH AIR FILTRATION MEDIA FOR OUTSIDE AND RETURN AIR PRIOR TO OCCUPANCY THAT PROVIDES AT LEAST MERV OF 13, SECTION 5.504.5.3 CGBSC 2019.
2. PROVIDE TESTING AND ADJUSTING OF HVAC SYSTEMS AND CONTROLS PER 5.410.4.3.1 CGBSC 2019.
3. COMMISSIONING IS REQUIRED FOR COMMERCIAL BUILDINGS 10,000 SF AND OVER PER SECTION 5.410.2 CGBSC 2019.
4. THE PERMANENT HVAC SYSTEM SHALL ONLY BE USED DURING CONSTRUCTION IF NECESSARY TO CONDITION THE BUILDING OR AREAS OF ADDITION OR ALTERATION WITHIN THE REQUIRED TEMPERATURE RANGE FOR MATERIAL AND EQUIPMENT INSTALLATION. IF THE HVAC SYSTEM IS USED DURING CONSTRUCTION, RETURN AIR FILTERS WITH A MINIMUM EFFICIENCY REPORTING VALUE (MERV) OF 13, BASED ON ASHRAE 52.2-1999, OR AN AVERAGE EFFICIENCY OF 30% BASED ON ASHRAE 52.1-1992 SHALL BE USED. ALL FILTERS SHALL BE REPLACED IMMEDIATELY PRIOR TO OCCUPANCY OR AT THE CONCLUSION OF CONSTRUCTION (5.504.1 CGBSC 2019).
5. AT THE TIME OF ROUGH INSTALLATION AND DURING STORAGE ON THE CONSTRUCTION SITE UNTIL FINAL STARTUP OF THE HEATING, COOLING AND VENTILATING EQUIPMENT, ALL DUCT AND OTHER RELATED AIR DISTRIBUTION COMPONENT OPENINGS SHALL BE COVERED WITH TAPE, PLASTIC, SHEET METAL OR OTHER METHODS ACCEPTABLE TO THE ENFORCING AGENCY TO REDUCE THE AMOUNT OF DUST, WATER AND DEBRIS WHICH MAY ENTER THE SYSTEM (5.504.3 CGBSC 2019).
6. IN MECHANICALLY VENTILATED BUILDINGS, REGULARLY OCCUPIED AREAS OF THE BUILDING SHALL BE PROVIDED WITH AIR FILTRATION MEDIA FOR OUTSIDE AND RETURN AIR THAT PROVIDES AT LEAST A MINIMUM EFFICIENCY REPORTING VALUE (MERV) OF 13. MERV 13 FILTERS SHALL BE INSTALLED PRIOR TO OCCUPANCY, AND RECOMMENDATIONS FOR MAINTENANCE WITH FILTERS OF THE SAME VALUE SHALL BE INCLUDED IN THE OPERATION AND MAINTENANCE MANUAL (5.504.5.3 CGBSC 2019).
7. WHERE OUTDOOR AREAS ARE PROVIDED FOR SMOKING, PROHIBIT SMOKING WITHIN THE BUILDING AS ALREADY PROHIBITED BY OTHER LAWS OR REGULATIONS; OR AS ENFORCED BY ORDINANCES, REGULATIONS, OR POLICIES OF ANY CITY, COUNTY, CITY AND COUNTY, CALIFORNIA COMMUNITY COLLEGE, CAMPUS OF THE CALIFORNIA STATE UNIVERSITY, OR CAMPUS OF THE UNIVERSITY OF CALIFORNIA, WHICHEVER ARE MORE STRINGENT. WHEN ORDINANCES, REGULATIONS, OR POLICIES ARE NOT IN PLACE, SIGNAGE SHALL BE POSTED TO INFORM BUILDING OCCUPANTS OF THE PROHIBITIONS.
8. MECHANICALLY OR NATURALLY VENTILATED SPACES IN BUILDINGS SHALL MEET THE MINIMUM REQUIREMENTS OF SECTION 121 (REQUIREMENTS FOR VENTILATION) OF THE 2019 CALIFORNIA ENERGY CODE, OR THE APPLICABLE LOCAL CODE, WHICHEVER IS MORE STRINGENT, AND DIVISION 1, CHAPTER 4 OF CCR, TITLE 8. (CAL GREEN SECTION 5.506.1)
9. FOR BUILDINGS OR ADDITIONS EQUIPPED WITH DEMAND CONTROL VENTILATION, CO2 SENSORS AND VENTILATION CONTROLS SHALL BE SPECIFIED AND INSTALLED IN ACCORDANCE WITH THE REQUIREMENTS OF 2019 CALIFORNIA ENERGY CODE, SECTION 120.1(C)(4), (5.506.2 CGBSC 2019).
10. BUILDING ASSEMBLIES AND COMPONENTS WITH STC VALUES DETERMINED IN ACCORDANCE WITH ASTM E90 AND ASTM E413 SHALL BE EMPLOYED.
11. WALL AND ROOF-CEILING ASSEMBLIES EXPOSED TO THE NOISE SOURCE MAKING UP THE BUILDING OR ADDITION ENVELOPE OR ALTERED ENVELOPE SHALL MEET A COMPOSITE STC RATING OF AT LEAST 50 OR A COMPOSITE OITC RATING OF NO LESS THAN 40, WITH EXTERIOR WINDOWS OF A MINIMUM STC OF 40 OR OITC OF 30 IF LOCATED WITHIN THE 65 CNEL NOISE INDUSTRIAL SOURCE OR FIXED-GUIDEWAY SOURCE AS DETERMINED BY THE NOISE ELEMENT OF THE GENERAL PLAN. (5.507.4.1 CGBSC) SEE EXCEPTIONS 1&2 ON SEC. 5.507.4.1.
12. INSTALLATIONS OF HVAC, REFRIGERATION AND FIRE SUPPRESSION EQUIPMENT SHALL COMPLY WITH SECTIONS 5.508.1.1 AND 5.508.1.2 CGBSC 2019. HVAC, REFRIGERATION AND FIRE SUPPRESSION EQUIPMENT SHALL NOT CONTAIN CHLOROFLUOROCARBONS (CFCs) AND SHALL NOT CONTAIN HALONS (5.508.1 CGBSC 2019).
13. IN ADDITION TO TESTING AND ADJUSTING, BEFORE A NEW SPACE-CONDITIONING SYSTEM SERVING A BUILDING OR SPACE IS OPERATED FOR NORMAL USE, BALANCE THE SYSTEM IN ACCORDANCE WITH THE PROCEDURES DEFINED BY THE TESTING ADJUSTING AND BALANCING BUREAU NATIONAL STANDARDS, THE NEBB PROCEDURAL STANDARDS; OR AABC NATIONAL STANDARDS.
14. PROVIDE THE BUILDING OWNER OR REPRESENTATIVE WITH DETAILED OPERATING AND MAINTENANCE INSTRUCTIONS AND COPIES OF GUARANTIES/WARRANTIES FOR EACH SYSTEM. O&M INSTRUCTIONS SHALL BE CONSISTENT WITH OSHA REQUIREMENTS IN CCR, TITLE 8, 5.410.4.5 CGBSC 2019, AND OTHER RELATED REGULATIONS.

GENERAL NOTES

1. THESE DRAWINGS ARE A GENERAL GRAPHIC PRESENTATION OF THE WORK. DUCTWORK, PIPING, AND EQUIPMENT, AS SHOWN, ARE SCHEMATIC. FABRICATE AND INSTALL BASED ON ACTUAL FIELD MEASUREMENT. COORDINATE WITH OTHER TRADES. PROVIDE A COMPLETE SET OF SHOP DRAWINGS REFLECTING ACTUAL INSTALL, ACCESS REQUIREMENTS, AND DETAILS BASED UPON THE ACTUAL EQUIPMENT PROCURED. MAINTAIN AN UP TO DATE SET OF AS-BUILT DRAWINGS AT THE JOB SITE.
2. THESE DRAWINGS ARE TO BE CONSIDERED NOT FOR CONSTRUCTION UNTIL THEY ARE STAMPED, SIGNED, AND PERMITTED. UNTIL THEN THEY ARE SUBJECT TO CHANGE WITHOUT NOTICE.
3. REVIEW ALL DRAWINGS AND SPECIFICATIONS INCLUDING ARCHITECTURAL, STRUCTURAL, CIVIL, MECHANICAL, PLUMBING, AND ELECTRICAL. ANY QUESTIONS SHALL BE BROUGHT UP, IN WRITING, TO THE ATTENTION OF THE ENGINEER BEFORE THE START OF CONSTRUCTION.
4. PROVIDE ACCESS AND CLEARANCE FOR MAINTENANCE FOR MECHANICAL EQUIPMENT AND COMPONENTS AS RECOMMENDED BY EQUIPMENT MANUFACTURER AND APPLICABLE CODES.
5. HANDLE, STORE AND INSTALL EQUIPMENT PER MANUFACTURER'S INSTRUCTIONS.
6. INSTALL VALVES WITH UNIONS OR FLANGES AT EACH PIECE OF EQUIPMENT ARRANGED TO ALLOW SERVICE MAINTENANCE, AND EQUIPMENT REMOVAL WITHOUT SYSTEM SHUT-DOWN.
7. BRACE AND SUPPORT PIPES, CONDUIT, AND DUCTWORK IN ACCORDANCE WITH SMACNA GUIDELINES FOR SEISMIC RESTRAINTS OF MECHANICAL AND PLUMBING PIPING SYSTEM.
8. REFER TO ARCHITECTURAL REFLECTED CEILING PLAN FOR EXACT LOCATION OF DIFFUSERS, REGISTERS, GRILLES, AND ACCESS PANELS.
9. ALL DUCT DIMENSIONS, AS SHOWN ON MECHANICAL DRAWINGS ARE CLEAR INSIDE DIMENSIONS.
10. COMMISSION AND START-UP THE MECHANICAL SYSTEMS TO ASSURE A COMPLETE AND OPERATIONAL HVAC SYSTEM IN ACCORDANCE WITH ASHRAE AND NEBB.
11. ALL SQUARE ELBOWS IN DUCTWORK SHALL HAVE DOUBLE THICKNESS TURNING VANES. ALL RADIUS ELBOWS IN DUCTWORK SHALL BE MINIMUM 1.5W (1.5xWIDTH) AND HAVE 3 SPLITTER VANES. PROVIDE MANUAL VOLUME DAMPER AT EACH BRANCH DUCT TAKE- OFF SERVING EACH AIR TERMINAL DEVICE. PROVIDE BALANCING DAMPERS FOR EACH MAIN DUCT TAKE-OFF IN ACCORDANCE WITH SMACNA IN ORDER TO ASSURE A COMPLETELY BALANCED SYSTEM.
12. FIRE DAMPER ASSEMBLIES, INCLUDING LOCATION, SLEEVES, AND INSTALLATION PROCEDURES SHALL BE APPROVED BY THE BUILDING INSPECTOR PRIOR TO PROCUREMENT AND INSTALLATION. REFER TO ARCHITECTURAL DRAWINGS FOR EXACT LOCATION OF FIRE RATED WALLS AND SMOKE SEPARATIONS.
13. COORDINATE WITH ELECTRICAL AND CONTROL CONTRACTORS FOR ALL POWER REQUIREMENTS PRIOR TO BID.
14. UPON INSTALLATION OF ALL EQUIPMENT, DEVICES, VIBRATION ISOLATION, ETC., PROVIDE WRITTEN CONFIRMATION BY EQUIPMENT MANUFACTURER'S REPRESENTATIVES TO ENSURE COMPLIANCE WITH MANUFACTURER'S REQUIREMENTS.
15. PROVIDE DETAILS AND SEISMIC CALCULATIONS FOR ALL EQUIPMENT ON VIBRATION ISOLATION. ALL DETAILS SHALL BE STAMPED BY A STRUCTURE ENGINEER FROM VIBRATION ISOLATION MANUFACTURER.
16. THE CONTRACTOR SHALL SELECT ALL CIRCUIT SETTERS/BALANCING VALVES FOR ACTUAL FLOW THROUGH THE PIPE AND THE PROPER PRESSURE DROP TO ENSURE PROPER OPERATION AND NOT BASED ON PIPE SIZES.
17. PROVIDE SALT SPRAY COATING ON CONDENSER COILS WHEN PROJECT IS WITHIN 5 MILES OF THE OCEAN.
18. PROVIDE ALL MULTI-MOTOR EQUIPMENT WITH HIGH SCCR RATING.

PROJECT NOTES

1. CONTRACTOR SHALL COORDINATE ARCHITECTURAL REFLECTED CEILINGS PLANS WITH ALL DISCIPLINES TO VERIFY CLEARANCES BETWEEN HVAC DUCTS, HVAC PIPING, LIGHT FIXTURES, ELECTRICAL DATA CONDUITS, PLUMBING LINES, FIRE PROTECTION LINES, STRUCTURAL MEMBERS, ETC. SPECIAL ATTENTION IS REQUIRED ALONG THE LENGTH OF MAIN MECHANICAL SUPPLY AND RETURN AIR DUCTS WHERE THERE IS LIMITED CLEARANCE FOR PASSAGE OR ROUTING OF UTILITIES.
2. THE SPACE FOR DUCT WORK & MECHANICAL EQUIPMENT FOR THIS PROJECT IS LIMITED. COORDINATION WITH OTHER TRADES IS CRITICAL. PROCEED WITH PREPARATION OF SHOP DRAWINGS IMMEDIATELY UPON RECEIVING AN AUTHORIZATION TO PROCEED FOR THE PROJECT. COMPLETE SHOP DRAWINGS PRIOR TO MATERIAL FABRICATION AND INSTALLATION.
3. PROVIDE ORIGINALLY PREPARED CONTRACTOR'S SHOP DRAWINGS IN ELECTRONIC FORMAT. THE SHOP DRAWINGS SHALL INCLUDE THE FOLLOWING:
   a. DUCT, PIPE AND PLUMBING ELEVATIONS.
   b. DOUBLE LINE DUCTWORK AND PIPING (6" AND LARGER).
   c. ACTUAL SIZE OF PURCHASED EQUIPMENT. PER APPROVED CONTRACTOR'S SHOP DRAWINGS.
   d. ACCESS PANELS INCLUDING CEILING PANELS.
   e. ACCESS CLEARANCES FOR EQUIPMENT.
   f. ACTUAL LOCATIONS OF CEILING DIFFUSERS, REGISTERS, AND RETURN REGISTERS.
   g. LOCATIONS OF STRUCTURAL MEMBERS SUCH AS BEAMS.
   h. ACTUAL LOCATIONS OF CONTROL PANELS AND POWER CONNECTIONS TO EQUIPMENT.
   i. COLOR CODED DUCT AND PIPING BASED ON MATERIAL USED.
   j. MINIMUM 1/4"=1'0" SCALE DRAWINGS.
   k. LABEL AND TAG SCHEDULE FOR EQUIPMENT.
   l. DUCT TRANSITIONS TO CLEAR BEAMS OR TIGHT AREAS.
   m. ROOM TEMPERATURE SENSOR LOCATIONS.
   n. POINT OF CONNECTION TO UTILITIES OUTSIDE THE BUILDING.
   o. SECTIONS OR 3-D DRAWINGS OF CONGESTED AREAS.
   p. GRID LINES.
   q. UNDERGROUND PIPING.
4. DO NOT COMMENCE WITH ANY INSTALLATION, ORDERING OF ANY EQUIPMENT OR MATERIAL FABRICATION WITHOUT AN APPROVED SHOP DRAWING SUBMITTAL.
5. FOR EACH SUBMITTAL, THE CONTRACTOR SHALL PROVIDE A LETTER (ON COMPANY LETTERHEAD) AND SIGNED BY THE PROJECT MANAGER INDICATING THE SUBMITTAL HAS BEEN FULLY IN HOUSE REVIEWED TO ENSURE FULL COMPLIANCE WITH THE CONTRACT DOCUMENTS AND COORDINATION WITH OTHER TRADES. ANY EXCEPTIONS TO THE CONTRACT DOCUMENTS SHALL BE CLEARLY INDICATED ON THIS LETTER.

REGISTERED PROFESSIONAL ENGINEER
ROY C. CAMPBELL
No. M 025911
EXP. 6-30-23
MECHANICAL
STATE OF CALIFORNIA

LICENSED ARCHITECT
ROGER CLARKE
No. C-21340
Exp. 10-31-23
STATE OF CALIFORNIA

STAMPS

IDENTIFICATION STAMP
DIV. OF THE STATE ARCHITECT
APP: 04-120895 INC:
REVIEWED FOR
SS ☑ FLS ☑ ACS ☑
DATE: 06/27/2022

CONSULTANT BRANDING

MA ENGINEERS
5160 Carroll Canyon Rd, Suite 200
San Diego, California 92121
Consulting Mechanical Engineers
T. 858 200-0030 www.ma-engr.com

RUHNAU CLARKE ARCHITECTS

DSA NOTES

MEP COMPONENT ANCHORAGE NOTE

ALL MECHANICAL, PLUMBING, AND ELECTRICAL COMPONENTS SHALL BE ANCHORED AND INSTALLED PER THE DETAILS ON THE DSA APPROVED CONSTRUCTION DOCUMENTS. WHERE NO DETAIL IS INDICATED THE FOLLOWING COMPONENTS SHALL BE ANCHORED OR BRACED TO MEET THE FORCE AND DISPLACEMENT REQUIREMENTS PRESCRIBED IN THE 2019 CBC, SECTIONS 1616A.1.18 THROUGH 1616A 1.26 AND ASCE 7-16 CHAPTER 13, 26 AND 30.

1. ALL PERMANENT EQUIPMENT AND COMPONENTS.
2. TEMPORARY OR MOVABLE EQUIPMENT THAT IS PERMANENTLY ATTACHED (E.G.: HARD-WIRED) TO BUILDING UTILITY SERVICES SUCH AS ELECTRICITY, GAS, OR WATER. "PERMANENTLY ATTACHED" SHALL INCLUDE ALL ELECTRICAL CONNECTIONS EXCEPT PLUGS FOR 110/220 VOLT RECEPTACLES HAVING A FLEXIBLE CABLE.
3. TEMPORARY, MOVABLE OR MOBILE EQUIPMENT WHICH IS HEAVIER THAN 400 POUNDS OR HAS A CENTER OF MASS LOCATED 4 FEET OR MORE ABOVE THE ADJACENT FLOOR OR ROOF LEVEL THAT DIRECTLY SUPPORT THE COMPONENT IS REQUIRED TO BE RESTRAINED IN A MANNER APPROVED BY DSA.

THE FOLLOWING MECHANICAL AND ELECTRICAL COMPONENTS SHALL BE POSITIVELY ATTACHED TO THE STRUCTURE BUT NEED NOT DEMOSTRATE DESIGN COMPLIANCE WITH THE REFERENCES NOTED ABOVE. THESE COMPONENTS SHALL HAVE FLEXIBLE CONNECTIONS PROVIDED BETWEEN THE COMPONENT AND ASSOCIATED DUCTWORK, PIPING, AND CONDUIT. FLEXIBLE CONNECTIONS MUST ALLOW MOVEMENT IN BOTH TRANSVERSE AND LONGITUDINAL DIRECTIONS:

A. COMPONENTS WEIGHING LESS THAN 400 POUNDS AND HAVING A CENTER OF MASS LOCATED 4 FEET OR LESS ABOVE THE ADJACENT FLOOR OR ROOF LEVEL THAT DIRECTLY SUPPORT THE COMPONENT.
B. COMPONENTS WEIGHING LESS THAN 20 POUNDS, OR IN THE CASE OF DISTRIBUTED SYSTEMS LESS THAN 5 POUNDS PER FOOT WHICH ARE SUSPENDED FROM A ROOF OR FLOOR OR HUNG FROM A WALL.

THE ANCHORAGE OF ALL MECHANICAL, ELECTRICAL AND PLUMBING COMPONENTS SHALL BE SUBJECT TO THE APPROVAL OF THE DESIGN PROFESSIONAL IN GENERAL RESPONSIBLE CHARGE OR STRUCTURAL ENGINEER DELEGATED RESPONSIBILITY AND ACCEPTANCE BY DSA. THE PROJECT INSPECTOR WILL VERIFY THAT ALL COMPONENTS AND EQUIPMENT HAVE BEEN ANCHORED IN ACCORDANCE WITH THE ABOVE REQUIREMENTS.

PIPING, DUCTWORK, AND ELECTRICAL DISTRIBUTION SYSTEM BRACING NOTE:

PIPING, DUCTWORK, AND ELECTRICAL DISTRIBUTION SYSTEMS SHALL BE BRACED TO COMPLY WITH THE FORCES AND DISPLACEMENTS PRESCRIBED IN ASCE 7-16 SECTION 13.3 AS DEFINED IN ASCE 7-16 SECTIONS 13.6.5, 13.6.6, 13.6.7, 13.6.8; AND 2019 CBC SECTIONS 1617A. 1.24, 1617A. 1.25 AND 1617A. 1.26.

THE METHOD OF SHOWING BRACING AND ATTACHMENTS TO THE STRUCTURE FOR THE IDENTIFIED DISTRIBUTION SYSTEM ARE AS NOTED BELOW. WHEN BRACING AND ATTACHMENTS ARE BASED ON A PRE-APPROVED INSTALLATION GUIDE (E.G. OSHPD OPM FOR 2013 CBC OR LATER), COPIES OF THE BARCING SYSTEM INSTALLATION GUIDE OR MANUAL SHALL BE AVAILABLE ON THE JOB SITE PRIOR TO THE START OF AND DURING THE HANGING AND BRACING OF THE DISTRIBUTION SYSTEMS. THE STRUCTURAL ENGINEER OF RECORD SHALL VERIFY THE ADEQUACY OF THE STRUCTURE TO SUPPORT THE HANGER AND BRACE LOADS.

MP ☐ MD ☐ PP ☐ E ☐ OPTION 1: DETAILED ON THE APPROVED DRAWINGS WITH PROJECT SPECIFIC NOTES AND DETAILS.

MP ☒ MD ☒ PP ☒ E ☐ OPTION 2: SHALL COMPLY WITH THE APPLICABLE OSHPD PREAPPROVAL. (OPM #) OPM-0043-13

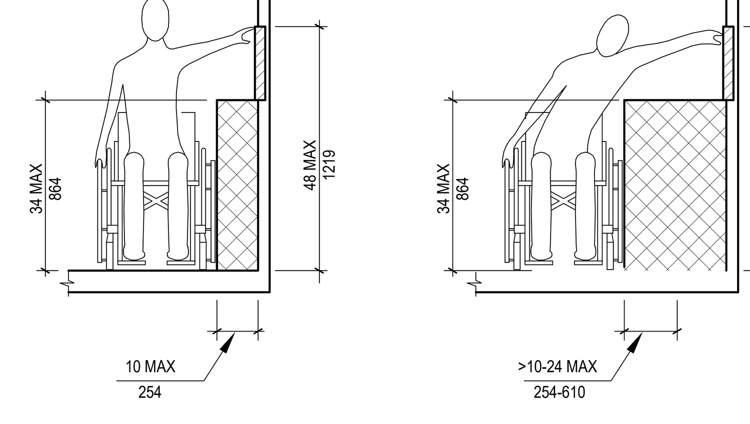

(a) (b)

FIGURE 11B-308.3.2
OBSTRUCTED HIGH SIDE REACH

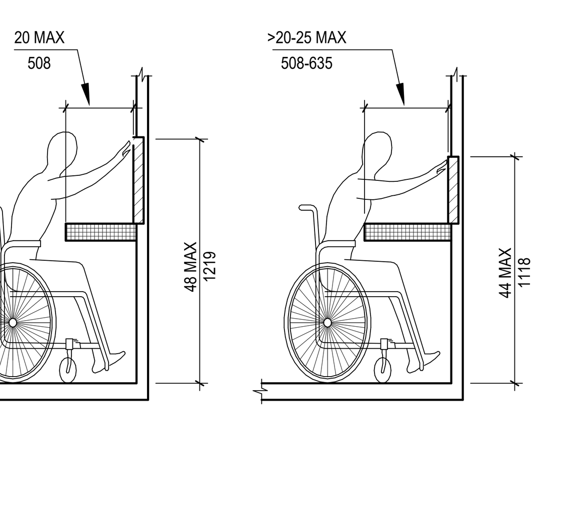

(a) (b)

FIGURE 11B-308.2.2
OBSTRUCTED HIGH FORWARD REACH

1 MOUNTING HEIGHT OVER OBSTRUCTION
NO SCALE

GHS KITCHEN & WEIGHTROOM: 06/13/2022 DSA SUBMITTAL

PROJECT No. :1-30-55
6/13/2022 10:25:59 AM

DRAWN BY: CHECKED BY:
ISSUE No.______ DATE________ DESCRIPTION______ REVISION No.______ DATE________ DESCRIPTION______
ISSUE No.______ DATE________ DESCRIPTION______ REVISION No.______ DATE________ DESCRIPTION______
ISSUE No.______ DATE________ DESCRIPTION______ REVISION No.______ DATE________ DESCRIPTION______
ISSUE No.______ DATE________ DESCRIPTION______ REVISION No.______ DATE________ DESCRIPTION______

RUHNAUCLARKE.COM
3775 TENTH STREET, RIVERSIDE CALIFORNIA 92501 (951) 684 4664 / 5751 PALMER WAY, SUITE C, CARLSBAD CALIFORNIA 92010 (760) 438 5899

GHS KITCHEN & WEIGHTROOM
GROSSMONT HIGH SCHOOL
1100 MURRAY DR, EL CAJON, CA 92020
GROSSMONT UNION HIGH SCHOOL

MECHANICAL GENERAL NOTES, LEGEND

M0-0.1

PACKAGE ROOF TOP UNIT SCHEDULE

SYMBOL	DESCRIPTION	AREA SERVED	BLDG SERVED	EVAPORATOR FAN CFM	EVAPORATOR FAN E.S.P.	EVAPORATOR FAN DRIVE	EVAPORATOR FAN H.P.	COOLING CAPACITY AMB (°F)	COOLING CAPACITY EDB (°F)	COOLING CAPACITY EWB (°F)	COOLING CAPACITY TOTAL CAP. (MBH)	COOLING CAPACITY SENSIBLE CAP. (MBH)	HEATING COIL INPUT MBH	HEATING COIL MIN. AFUE/TE	ELECTRICAL MCA	ELECTRICAL MOCP	ELECTRICAL V	ELECTRICAL PH.	MIN. OSA CFM	FILTERS TK.	FILTERS MERV	MAX. OPER. WT. (LBS)	SCCR (min. RMS)	REMARKS
RTU K-1	CAPTIVEAIRE CASRTV2-1.200-18-10T-DOAS	KITCHEN	KITCHEN	4000	0.5	BELT	5.0	95	80	67	74.01	57.94	50/72	82	33.8	40	460	3	720	2"	13	1922	10kA	1 3 5 7 9 12 13
RTU K-2	CARRIER 48GCLM05	KITCHEN SERVICE LINES	KITCHEN	1600	0.5	BELT	1.0	95	80	67	49.96	37.06	60.0	81	11	15	480	3	480	2"	13	1450	5kA	1 3 4 5 6 8 11 15
RTU M-1	CARRIER 48LCD007	MUSEUM	MUSEUM ROOM	2400	0.5	BELT	1.0	95	80	67	74.01	57.94	50 / 72	82	20	25	480	3	720	2"	13	2200	10kA	1 2 3 4 5 6 7 8 9 14
RTU W-1	CARRIER 48GCLM05	P.E. ATTENDANT, STORAGE	WEIGHT ROOM	1600	0.5	BELT	1.0	95	80	67	49.96	37.06	60.0	81	11	15	480	3	480	2"	13	1450	5kA	1 3 4 5 6 8 11 15
RTU W-2	CARRIER 48GCLM05	SPORTS MEDICINE	WEIGHT ROOM	1600	0.5	BELT	1.0	95	80	67	49.96	37.06	60.0	81	11	15	480	3	480	2"	13	1450	5kA	1 2 3 4 5 6 8 11 15
RTU W-3	CARRIER 48LCD09	WEIGHT ROOM	WEIGHT ROOM	3400	0.5	BELT	1.0	95	80	67	104.19	78.2	120/150	80	25	30	480	3	1020	2"	13	2900	10kA	1 3 4 5 6 7 8 9 10
RTU W-4	CARRIER 48GCLM05	COACHES OFFICE, REFLECTION ROOM AND PUBLICATIONS	WEIGHT ROOM	925	0.5	BELT	1.0	95	80	67	49.96	37.06	60	81	11	15	480	3	480	2"	13	1450	5kA	1 3 4 5 6 8 11

1 PROVIDE COIL GUARDS 2 CONTROLS CONTRACTOR SHALL PROVIDE AND INSTALL ROOM CO2 SENSORS AND IMPLEMENT DCV 3 PROVIDE VFD 4 PROVIDE WITH MICROMETL ISOLATOR ROOF CURB 5 PROVIDE WITH POST MANUFACTURERED COATED COILS 6 PROVIDE SEPARATE POWER SUPPLY AND DISCONNECT FOR MODULATING POWER EXHAUST WITH ECONOMIZER
7 PROVIDE SMOKE DETECTOR TO BE LOCATED IN SUPPLY AIR DUCT. 8 SUPPLY AND RETURN AIR DUCTWORK SHALL BE LINED PER 233113. 9 ARI EER 13.0 / IEER 20.6 10 ARI EER 12.8 / IEER 19.4 11 ARI SEER 16.1 12 INTERLOCK EF-K-1 WITH RTU-K-1 13 IEER 18.6 14 1 HP MODULATING POWER EXHAUST 2.5 FLA, 3.1 MCA, 5.6 MOCP, 480V/3 PHASE 15 1 HP MODULATING POWER EXHAUST 2.5 FLA, 3.1 MCA, 5.6 MOCP, 480V/3 PHASE

DUCTLESS SPLIT SYSTEM SCHEDULE

SYMBOL	DESCRIPTION	BUILDING SERVED	SERVICE	INDOOR FAN SECTION: INDOOR FAN CFM	INDOOR FAN DRIVE	ELECTRICAL DATA V	ELECTRICAL DATA PH	ELECTRICAL DATA Hz	OPER WT. LBS.	OUTDOOR SECTION SYMBOL	DESCRIPTION	ELECTRICAL DATA MCA	MOCP	V	PH	Hz	OPER. WT. LBS.	COMBINED CAPACITY: COOLING TOTAL CAP. MBH	SENSIBLE CAP. MBH	AMB °F	ENT DB °F	ENT WB °F	SEER	REFRIGERANT TYPE	REMARKS
DFC K-1	CARRIER 40MAQB09B-3	KITCHEN	DATA R00M #127	360 HIGH SPD	DIRECT	208	1	60	30	DCU K-1	CARRIER 38MAQB09R-3	9	15	208	1	60	115	3-13 MBH	--	95	75	65	25.0	R410A	1 2 3 4 5 6
DFC W-1	CARRIER 40MAQB09B-3	WEIGHT ROOM	ELECTRICAL ROOM #151	360 HIGH SPD	DIRECT	208	1	60	30	DCU W-1	CARRIER 38MAQB09R-3	9	15	208	1	60	115	3-13 MBH	--	95	75	65	25.0	R410A	1 2 3 4 5 6
DFC W-2	CARRIER 40MAQB09B-3	WEIGHT ROOM	DATA ROOM #148	360 HIGH SPD	DIRECT	208	1	60	30	DCU W-2	CARRIER 38MAQB09R-3	9	15	208	1	60	115	3-13 MBH	--	95	75	65	25.0	R410A	1 2 3 4 5 6
DFC M-1	CARRIER 40MAQB09B-3	MUSEUM	PUBLICATIONS ROOM #901	360 HIGH SPD	DIRECT	208	1	60	30	DCU M-1	CARRIER 38MAQB09R-3	9	15	208	1	60	115	3-13 MBH	--	95	75	65	25.0	R410A	1 2 3 4 5 6

1 INDOOR UNIT POWERED BY OUTDOOR UNIT 2 REMOTE CONTROLLER MOUNTED ON WALL 3 UNIT CFM RATED AT HIGH SPEED 4 PROVIDE INTEGRAL CONDENSATE PUMP 5 PROVIDE WITH CONDENSER COIL GUARDS AND COATING 6 1" MERV 13 FILTER

EXHAUST FAN SCHEDULE

SYMBOL	DESCRIPTION	SERVES	LOCATION	CFM	ESP	DRIVE	RPM	MIN. WHEEL DIA.	MOTOR BHP.	MOTOR MAX HP.	MOTOR VOLTAGE	MOTOR PHASE	MAX. OPER WT. (LBS.)	REMARKS
EF W-1	L. COOK ACE-D 135C17D	WEIGHT ROOM TOILETS	ROOF	600	1.25	DIRECT	1497	17"	0.332	0.5	480	3	45	1 2
EF M-1	L. COOK ACE-D 90C15DL	MUSEUM TOILET ROOM	ROOF	100	0.75	DIRECT	1600	15"	70.3w	0.125	120	1	30	1 3
EF M-2	L. COOK ACE-D 90C15DL	MUSEUM CUSTODIAL RM.	ROOF	100	0.75	DIRECT	1600	15"	70.3w	0.125	120	1	30	1 3
EF M-3	L. COOK ACE-D 90C15DL	MUSEUM PUBLICATIONS RM.	ROOF	100	0.75	DIRECT	1600	15"	70.3w	0.125	120	1	30	1 3
EF K-1	CAPTIVEAIRE DU18HF-A	KITCHEN TYPE 1 HOODS	ROOF	3420	1.5	DIRECT	1389	--	1.89	3.0	480	3	320	4 5 7
EF K-2	CAPTIVEAIRE DU12HF-A	KITCHEN DISHWASHER	ROOF	500	0.5	DIRECT	1232	--	0.073	0.25	208	1	65	6
EF K-3	L. COOK ACE-D 90C15DH	KITCHEN BLDG TOILET, CUST	ROOF	200	0.5	DIRECT	1550	15"	76.8w	0.125	120	1	30	1 2

1 PROVIDE BACKDRAFT DAMPER AND SOUND ATTENUATING ROOF CURB 2 INTERLOCK WITH BMS SYSTEM 3 INTERLOCK WITH LIGHT SWITCH 4 INTERLOCK EF-K-1 WITH RTU-K-1 5 WITH VENTED ROOF CURB 6 INTERLOCK WITH SWITCH ON WALL 7 SEE ANCHORAGE DETAIL 1/M0-5.2

AIR DISTRIBUTION SCHEDULE

SYMBOL	TYPE	NECK SIZE	CFM RANGE	MODEL	ACCESSORIES	STYLE
A	SUPPLY AIR	6"	0-140	FOR INSTALLATION IN LAY-IN CEILING: TITUS PAS-AA PERFORATED FACE. -FOR INSTALLATION IN HARD CEILING: 6"Ø: 12X12 FACE 8"Ø & 10"Ø: 16X16 FACE 12"Ø & ABOVE: 24X24 FACE	OPPOSED BLADE DAMPER	MODULAR CORE
		8"	141-210			
		10"	211-275			
		12"	276-400			
		14"	401-450			
		16"	451-570			
SYMBOL	TYPE	NECK SIZE	CFM RANGE	MODEL	ACCESSORIES	STYLE
B	RETURN, EXHAUST AIR	6"	0-155	FOR INSTALLATION IN LAY-IN CEILING: TITUS PAR-AA PERFORATED FACE FOR INSTALLATION IN HARD CEILING: 6"Ø: 12X12 FACE 8"Ø & ABOVE: 24X24 FACE	OPPOSED BLADE DAMPER	RETURN, EXHAUST, OR TRANSFER AIR GRILLE
		8"	156-250			
		10"	251-375			
		12"	376-475			
		14"	476-640			
C	SUPPLY AIR	12X6	250	TITUS 300RL DOUBLE DEFLECTION.	OPPOSED BLADE DAMPER	SIDEWALL SUPPLY AIR
		30X6	500			
		18X8	535			
		36X8	800			
		46X6	800			
D	RETURN AIR	30X12	1000	TITUS 350RL DOUBLE DEFLECTION.	OPPOSED BLADE DAMPER	SIDEWALL RETURN AIR
		30X16	1500			
		48X12	1800			

NOTE: REFER TO ARCHITECTURAL REFLECTED CEILING PLAN FOR FINAL LOCATIONS AND CEILING TYPE

STAMPS

IDENTIFICATION STAMP
DIV. OF THE STATE ARCHITECT
APP: 04-120895 INC:
REVIEWED FOR
SS ☑ FLS ☑ ACS ☑
DATE: 06/27/2022

CONSULTANT BRANDING

MA ENGINEERS
5160 Carroll Canyon Rd, Suite 200
San Diego, California 92121
T: 858 208-0030 www.ma-eng.com

RUHNAU CLARKE ARCHITECTS

GHS KITCHEN & WEIGHTROOM: 06/13/2022 DSA SUBMITTAL

PROJECT No. :1-30-55
6/13/2022 3:25:42 PM

DRAWN BY: CHECKED BY:
ISSUE No.____ DATE____ DESCRIPTION____ REVISION No.____ DATE____ DESCRIPTION____

WEIGHT ROOM BUILDING

Project Name:	Grossmont Weight Rm Bldg	NRCC-PRF-01-E	Page 1 of 15
Project Address:	1100 Murray Dr. El Cajon 92020	Calculation Date/Time:	15:07, Wed, Feb 23, 2022
Input File Name:	2022-02-21_6268_Grossmont Weight Rm Bldg.cibd19x		

A. GENERAL INFORMATION

1.	Project Location (city)	El Cajon	8.	Standards Version	Compliance2019
2.	CA Zip Code	92020	9.	Compliance Software (version)	EnergyPro 8.1
3.	Climate Zone	10	10.	Weather File	SAN-DIEGO-GILLESPIE_722907_CZ2010.epw
4.	Total Conditioned Floor Area in Scope	7,140 ft²	11.	Building Orientation (deg)	(N) 0 deg
5.	Total Unconditioned Floor Area	0 ft²	12.	Permitted Scope of Work	NewComplete
6.	Total # of Stories (Habitable Above Grade)	1	13	Building Type(s)	Nonresidential
7.	Total # of dwelling units	0	14	Gas Type	NaturalGas

B. PROJECT SUMMARY

Table Instructions: Table B shows which building components are included in the performance calculation. If indicated as not included, the project must show compliance prescriptively if within permit application.

Building Components Complying via Performance					Building Components Complying Prescriptively	
Envelope	☒ Performance	Covered Process: Commercial Kitchens	☐ Performance		*The following building components are ONLY eligible for prescriptive compliance and should be documented on the NRCC form listed if within the scope of the permit application (i.e. compliance will not be shown on the NRCC-PRF-E).*	
	☐ Not Included		☒ Not Included			
Mechanical	☒ Performance	Covered Process: Computer Rooms	☐ Performance		Indoor Lighting (Unconditioned)§140.6	*NRCC-LTI-E is required*
	☐ Not included		☒ Not Included		Outdoor Lighting §140.7	*NRCC-LTO-E is required*
Domestic Hot Water	☒ Performance	Covered Process: Laboratory Exhaust	☐ Performance		Sign Lighting §140.8	*NRCC-LTS-E is required*
	☐ Not Included		☒ Not Included		Mandatory Measures	
Lighting (Indoor Conditioned)	☒ Performance				*Electrical power systems, commissioning and solar ready requirements are mandatory and should be documented on the NRCC form listed if applicable (i.e. compliance will not be shown on the NRCC-PRF-E.)*	
	☐ Not Included				Electrical Power Distribution S110.11	*NRCC-ELC-E is required*
Solar Thermal Water Heating	☐ Performance				Commissioning §120.8	*NRCC-CXR-E is required*
	☒ Not Included				Solar Ready S110.10	*NRCC-SRA-E is required*

Project Name:	Grossmont Weight Rm Bldg	NRCC-PRF-01-E	Page 2 of 15
Project Address:	1100 Murray Dr. El Cajon 92020	Calculation Date/Time:	15:07, Wed, Feb 23, 2022
Input File Name:	2022-02-21_6268_Grossmont Weight Rm Bldg.cibd19x		

C1. COMPLIANCE RESULTS FOR PERFORMANCE COMPONENTS (Annual TDV Energy Use, kBtu/ft²-yr)

COMPLIES

Energy Component	Standard Design (TDV)	Proposed Design (TDV)	Compliance Margin (TDV)[1]
Space Heating	11.29	9.02	2.27
Space Cooling	48.01	33.58	14.43
Indoor Fans	83.11	59.81	23.30
Heat Rejection	--	--	--
Pumps & Misc.	--	--	--
Domestic Hot Water	16.20	24.66	-8.46
Indoor Lighting	38.01	38.01	--
ENERGY STANDARDS COMPLIANCE TOTAL	**196.62**	**165.08**	**31.54 (16.0%)**

[1] *Notes: The number in parenthesis following the Compliance Margin in column 4. represents the Percent Better than Standard.*

C2. RESULTS FOR 'ABOVE CODE' QUALIFICATIONS[1]

☐ This project is pursuing CalGreen Tier 1 ☐ This project is pursuing CalGreen Tier 2

Miscellaneous Energy Component	Standard Design (TDV)	Proposed Design (TDV)	Compliance Margin (TDV)[1]
Receptacle	69.85	69.85	--
Process	--	--	--
Other Ltg	--	--	--
Process Motors	--	--	--
COMPLIANCE TOTAL PLUS MISCELLANEOUS COMPONENTS	**266.47**	**234.93**	**31.5 (11.8%)**

[1] *Notes: This table is used to document compliance with programs OTHER THAN Title 24 Part 6, if applicable.*

D. EXCEPTIONAL CONDITIONS

This project uses the Simplified Geometry Performance Modeling Approach which is not capable of modeling daylighting controls and assumes the prescriptive Secondary Daylit Control requirements are met. PRESCRIPTIVE COMPLIANCE documentation (form NRCC-LTI-02-E) for the requirements of section 140.6(d) Automatic Daylighting Controls in Secondary Daylit Zones is required.

Project Name:	Grossmont Weight Rm Bldg	NRCC-PRF-01-E	Page 3 of 15
Project Address:	1100 Murray Dr. El Cajon 92020	Calculation Date/Time:	15:07, Wed, Feb 23, 2022
Input File Name:	2022-02-21_6268_Grossmont Weight Rm Bldg.cibd19x		

E. HERS VERIFICATION

This Section Does Not Apply

F. ADDITIONAL REMARKS

This Section Does Not Apply

G. ENVELOPE GENERAL INFORMATION

1	2	3	4
Opaque Surfaces & Orientation	Total Gross Surface Area (ft²)	Total Fenestration Area (ft²)	Window to Wall Ratio (%)
North-Facing[1]	1,202 ft²	30 ft²	02.5%
East-Facing[2]	1,442 ft²	60 ft²	04.2%
South-Facing[3]	1,154 ft²	72 ft²	06.2%
West-Facing[4]	962 ft²	42 ft²	04.4%
Total	**4,760 ft²**	**204 ft²**	**04.3%**
Roof	7,140 ft²	0 ft²	00.0%

Notes:
[1] *North-Facing is oriented to within 45 degrees of true north, including 45°00'00" east of north (NE), but excluding 45°00'00" west of north (NW).*
[2] *East-Facing is oriented to within 45 degrees of true east, including 45°00'00" south of east (SE), but excluding 45°00'00" north of east (NE).*
[3] *South-Facing is oriented to within 45 degrees of true south, including 45°00'00" west of south (SW), but excluding 45°00'00" east of south (SE).*
[4] *West-Facing is oriented to within 45 degrees of true west, including 45°00'00" north of due west (NW), but excluding 45°00'00" south of west (SW).*

H. FENESTRATION ASSEMBLY SUMMARY §110.6

1.	2.	3.	4.	5.	6.	7.	8.	9.
Fenestration Assembly Name / Tag or I.D.	Fenestration Type / Product Type / Frame Type	Certification Method[1]	Assembly Method	Area ft²	Overall U-factor	Overall SHGC	Overall VT	Status[2]
PPG SOLARBAN 60 (3) Caribia	VerticalFenestration FixedWindow N/A	NFRC Rated	SiteBuilt	204	0.87	0.41	0.50	N

[1] *Newly installed fenestration shall have a certified NFRC Label Certificate or use the CEC default tables found in Table 110.6-A and Table 110.6-B. Center of Glass (COG) values are for the glass only determined by the manufacturer, and are shown for ease of verification. Site-built fenestration values are calculated per Nonresidential Appendix NA6 and are used in the analysis.*
[2] *Status: N - New, A – Altered, E – Existing*

Project Name:	Grossmont Weight Rm Bldg	NRCC-PRF-01-E	Page 4 of 15
Project Address:	1100 Murray Dr. El Cajon 92020	Calculation Date/Time:	15:07, Wed, Feb 23, 2022
Input File Name:	2022-02-21_6268_Grossmont Weight Rm Bldg.cibd19x		

I. ENVELOPE DETAILS §120.7 & §140.3

I1. OPAQUE SURFACE ASSEMBLY SUMMARY

1	2	3	4	5	6	7	8	9
Surface Name	Surface Type	Description of Assembly Layers	Area (ft²)	Framing Type	Cavity R-Value	Continuous R-Value	U-Factor / F-Factor / C-Factor	Status[1]
R-19 Wall8	ExteriorWall	Stucco - 7/8 in. Vapor permeable felt - 1/8 in. Wood framed wall, 16in. OC, 5.5in., R-19 Gypsum Board - 1/2 in.	180	Wood	19	NA	U-Factor: 0.072	N
R-19 Wall12	ExteriorWall	Stucco - 7/8 in. Vapor permeable felt - 1/8 in. Wood framed wall, 16in. OC, 5.5in., R-19 Gypsum Board - 1/2 in.	4580	Wood	19	NA	U-Factor: 0.072	N
R-30 Roof No Attic15	Roof	Asphalt shingles - 1/4 in. Vapor permeable felt - 1/8 in. Plywood - 1/2 in. Air - Cavity - Wall Roof Ceiling - 4 in. or more Wood framed roof, 16in. OC, 11.25in., R-30 Gypsum Board - 1/2 in.	6927	Wood	30	NA	U-Factor: 0.034	N
Slab On Grade17	UndergroundFloor	Slab Type = UnheatedSlabOnGrade Insulation Orientation = None Insulation R-Value = R0	7140	NA	0	NA	F-Factor: 0.730	N
R-30 Roof Attic23	Roof	Asphalt shingles - 1/4 in. Vapor permeable felt - 1/8 in. Plywood - 1/2 in. Air - Cavity - Wall Roof Ceiling - 4 in. or more Wood framed roof, 24in. OC, 3.5in., R-30 Gypsum Board - 1/2 in.	213	Wood	30	NA	U-Factor: 0.038	N

[1] *Status: N - New, A – Altered, E – Existing*

I3. OPAQUE DOOR SUMMARY

1	2	3
Assembly Name	Overall U-factor	Status[1]
Insulated Door10	0.200	N

Project Name:	Grossmont Weight Rm Bldg	NRCC-PRF-01-E	Page 5 of 15
Project Address:	1100 Murray Dr. El Cajon 92020	Calculation Date/Time:	15:07, Wed, Feb 23, 2022
Input File Name:	2022-02-21_6268_Grossmont Weight Rm Bldg.cibd19x		

K1. Dry System Equipment (furnaces, air handling units, heat pumps, VRF, etc.)

Dry System Equipment [1] (Fan & Economizer info included below in Table N)

1	2	3	4	5	6	7	8	9	10
			Heating				Cooling		
Equipment Name	Equipment Type	Qty	Total Heating Output (kBtu/h)	Supp Heat Source (Y/N)	Supp Heat Output (kBtuh)	Efficiency	Total Cooling Output (kBtu/h)	Efficiency	Status[1]
RTU-W-1 Gas / DX	SZAC (Packaged3Phase)	1	50	No	0	AFUE-100.0	50	SEER-20.60 / EER-13.00	N
RTU-W-2 Gas / DX	SZAC (Packaged3Phase)	1	60	No	0	AFUE-100.0	49	SEER-16.10 / EER-12.20	N
RTU-W-3 Gas / DX	SZAC (Packaged3Phase)	1	120	No	0	AFUE-100.0	104	EER-12.8	N
RTU-W-4 Gas / DX	SZAC (Packaged3Phase)	1	50	No	0	AFUE-100.0	50	SEER-20.60 / EER-13.00	N
RTU-M-1 Gas / DX	SZAC (Packaged3Phase)	1	50	No	0	AFUE-100.0	50	SEER-20.60 / EER-13.00	N

[1] *Status: N - New, A – Altered, E – Existing*

K2. ECONOMIZER & FAN SYSTEMS SUMMARY §140.4[1]

1	2	3	4	5	6	7	8	9	10	11	12	13
	System Type	Design OA	Supply Fan				Return Fan					
Name or Item Tag	packaged, DOAS, etc.	CFM	CFM	BHP	Watts	Control	CFM	BHP	Watts	Control	Economizer Type (if present)	Status[1]
RTU-W-1 Gas / DX	SZAC	139	2400	0.710	619.2	ConstantVolume	NA	NA	NA	NA	DifferentialEnthalpy	N
RTU-W-2 Gas / DX	SZAC	393	1600	0.620	540.7	ConstantVolume	NA	NA	NA	NA	DifferentialEnthalpy	N
RTU-W-3 Gas / DX	SZAC	1034	3400	0.920	802.3	ConstantVolume	NA	NA	NA	NA	DifferentialEnthalpy	N
RTU-W-4 Gas / DX	SZAC	106	2400	0.710	619.2	ConstantVolume	NA	NA	NA	NA	DifferentialEnthalpy	N
RTU-M-1 Gas / DX	SZAC	736	2400	0.710	619.2	ConstantVolume	NA	NA	NA	NA	DifferentialEnthalpy	N

[1] *Status: N - New, A – Altered, E – Existing*

Project Name:	Grossmont Weight Rm Bldg	NRCC-PRF-01-E	Page 6 of 15
Project Address:	1100 Murray Dr. El Cajon 92020	Calculation Date/Time:	15:07, Wed, Feb 23, 2022
Input File Name:	2022-02-21_6268_Grossmont Weight Rm Bldg.cibd19x		

K3. EXHAUST FAN SUMMARY

This Section Does Not Apply

K4. Wet System Equipment (boilers, chillers, cooling towers, etc.)

1	2	3	4	5	6	7	8	9	10	11	12
							Pumps				
Name or Item Tag	Equipment Type	Qty	Vol (gal)	Rated Capacity (kBtu/h)	Efficiency	Standby Loss	Qty	GPM	HP	VSD (Y/N)	Status[1]

[1] *Status: N - New, A – Altered, E – Existing*

K5. SYSTEM FEATURES §120.2

1	2	3	4	5	6
System Name	Optimum Start	Window Interlocks per §140.4(n)	Evaporative Cooling	Heat Recovery	Other Controls
RTU-W-1 Gas / DX	No Optimum Start	NA	No Evaporative Cooler	No Heat Recovery	No DCV Controls, No DDC Differential Enthalpy Economizer No Supply Air Temp. Control
RTU-W-2 Gas / DX	No Optimum Start	NA	No Evaporative Cooler	No Heat Recovery	1 Zones With CO2Sensor Vent. Control, No DDC Differential Enthalpy Economizer No Supply Air Temp. Control
RTU-W-3 Gas / DX	No Optimum Start	NA	No Evaporative Cooler	No Heat Recovery	No DCV Controls, No DDC Differential Enthalpy Economizer No Supply Air Temp. Control
RTU-W-4 Gas / DX	No Optimum Start	NA	No Evaporative Cooler	No Heat Recovery	No DCV Controls, No DDC Differential Enthalpy Economizer No Supply Air Temp. Control
RTU-M-1 Gas / DX	No Optimum Start	NA	No Evaporative Cooler	No Heat Recovery	1 Zones With CO2Sensor Vent. Control, No DDC Differential Enthalpy Economizer No Supply Air Temp. Control
Weight Rm_Museum / Class1 - SHW	NA	NA	NA	NA	Fixed Temperature Control, No DDC

Notes: This table includes controls related to the performance path only. For projects using the prescriptive path, mandatory and prescriptive controls requirements are documented on the NRCC-MCH-E.

Project Name:	Grossmont Weight Rm Bldg	NRCC-PRF-01-E	Page 7 of 15
Project Address:	1100 Murray Dr. El Cajon 92020	Calculation Date/Time:	15:07, Wed, Feb 23, 2022
Input File Name:	2022-02-21_6268_Grossmont Weight Rm Bldg.cibd19x		

K6. MECHANICAL VENTILATION AND REHEAT §120.1

1	2	3	4	5	6	7	8	9
	Mechanical Ventilation							
Zone Name	Ventilation Function	# hotel rooms	# of people	# of bedrooms	Supply OA CFM	Exhaust CFM	Conditioned Area (sf)	DCV or Occupant Sensor Controls, or Both
1-Boys RR	Exhaust - Toilets, public Office - Office space	0	6.77	0	139	0	1354	NA
2-Sports Medicine	Misc - All others	0	26.18	0	393	0	1047	NA
3-Weight Rm	Sports/Entertainment - Gym, sports arena (play area)	0	20.67	0	1034	0	2067	NA
4-Couches Office	Office - Office space	0	3.54	0	106	0	709	NA
5-Class Rm / Museum	Education - Lecture/postsecondary classroom	0	49.08	0	736	0	1963	NA

K7. DISTRIBUTION SUMMARY §120.4/140.4(l)

This Section Does Not Apply

Multifamily or Hotel/Motel Occupancy? (if "Yes", see DOMESTIC/SERVICE HOT WATER SYSTEM SUMMARY)	No
Does the Project include Zonal Systems?	No

K8. ZONAL SYSTEM AND TERMINAL UNIT SUMMARY § 140.4

1	2	3	4	5	6	7	8	9	10	11	12
			Rated Capacity (kBtuh)		Airflow (cfm)			Fan			
System ID	Zone Name	System Type	Heating	Cooling	Design	Min.	Min. Ratio	BHP	Watts	Cycles	ECM Motor
1-Boys RR-Trm	1-Boys RR	Uncontrolled	NA	NA	2400	NA	0.00	NA	NA	NA	☐
2-Sports Medicine-Trm	2-Sports Medicine	Uncontrolled	NA	NA	1600	NA	0.00	NA	NA	NA	☐
3-Weight Rm-Trm	3-Weight Rm	Uncontrolled	NA	NA	3400	NA	0.00	NA	NA	NA	☐
4-Couches Office-Trm	4-Couches Office	Uncontrolled	NA	NA	2400	NA	0.00	NA	NA	NA	☐

Project Name:	Grossmont Weight Rm Bldg	NRCC-PRF-01-E	Page 8 of 15
Project Address:	1100 Murray Dr. El Cajon 92020	Calculation Date/Time:	15:07, Wed, Feb 23, 2022
Input File Name:	2022-02-21_6268_Grossmont Weight Rm Bldg.cibd19x		

K8. ZONAL SYSTEM AND TERMINAL UNIT SUMMARY § 140.4

1	2	3	4	5	6	7	8	9	10	11	12
			Rated Capacity (kBtuh)		Airflow (cfm)			Fan			
System ID	Zone Name	System Type	Heating	Cooling	Design	Min.	Min. Ratio	BHP	Watts	Cycles	ECM Motor
5-Class Rm / Museum-Trm	5-Class Rm / Museum	Uncontrolled	NA	NA	2400	NA	0.00	NA	NA	NA	☐

K9. EVAPORATIVE COOLER SUMMARY

This Section Does Not Apply

L1. WATER HEATER EQUIPMENT SUMMARY

1	2	3	4	5	6	7	8	9	10	11	12	13	14
Name	Heater Element Type	Tank Type	Qty	Tank Vol (gal)	Rated Input	Rated Input Unit	Efficiency	Efficiency Unit	Tank Insulation R-value (int/Ext)	Standby Loss Fraction	1st Hour Rating or Flow Rate (gal)	Heat Pump Type	Tank Location or Ambient Condition
30 Gallon Electric2	Electricity	Storage	1	30.00	6.0	kW	0.93	UEF	NA	NA	80	NA	NA

N1. INDOOR CONDITIONED LIGHTING GENERAL INFO

1	2	3	4	5	6
				Additional (Custom) Allowance	
Occupancy Type [1]	Conditioned Floor Area [2] (ft²)	Installed Lighting Power (Watts)	Lighting Control Credits (Watts)	Area Category Footnotes (Watts)	Tailored Method (Watts)
Restrooms	426	276	0	0	0
Office Area (<250 square feet)	1,413	990	0	0	0
Classroom, Lecture, Training, Vocational Areas	3,010	2,107	0	0	0

Project Name:	Grossmont Weight Rm Bldg	NRCC-PRF-01-E	Page 9 of 15
Project Address:	1100 Murray Dr. El Cajon 92020	Calculation Date/Time:	15:07, Wed, Feb 23, 2022
Input File Name:	2022-02-21_6268_Grossmont Weight Rm Bldg.cibd19x		

N1. INDOOR CONDITIONED LIGHTING GENERAL INFO

1	2	3	4	5	6
				Additional (Custom) Allowance	
Occupancy Type [1]	Conditioned Floor Area [2] (ft²)	Installed Lighting Power (Watts)	Lighting Control Credits (Watts)	Area Category Footnotes (Watts)	Tailored Method (Watts)
Exercise/Fitness Center and Gymnasium Areas	2,067	1,034	0	0	0
Office Area (>250 square feet)	224	146	0	0	0
Building Totals:	**7,140**	**4,553**	**0**	**0**	**0**

[1] *See Table 140.6-C*
[2] *See NRCC-LTI-01-E for unconditioned spaces*
[3] *Lighting information for existing spaces modeled is not included in the table.*

N4. INDOOR CONDITIONED LIGHTING MANDATORY LIGHTING CONTROLS

Building Level Controls

1	2
Mandatory Demand Response §110.12(c)	**Shut-Off Controls §130.1(c)**
Required	Required

Area Level Controls (includes all lighting controls installed in conditioned space to meet mandatory requirements per §130.1)

4	5	6	7	8	9	10
Area Description	Area Category Primary Function Area	Area Controls 130.1(a)	Multi-Level Controls 130.1(b)	Shut-Off Controls 130.1(c)	Primary Daylighting 130.1(d)	Secondary Daylighting 140.5(d)

STAMPS

IDENTIFICATION STAMP
DIV. OF THE STATE ARCHITECT
APP: 04-120895 INC:
REVIEWED FOR
SS ☑ FLS ☑ ACS ☑
DATE: 06/27/2022

CONSULTANT BRANDING

MA ENGINEERS
5160 Carroll Canyon Rd, Suite 200
San Diego, California 92121
T: 858 200-0030 www.ma-eng.com

RUHNAU CLARKE ARCHITECTS

GHS KITCHEN & WEIGHTROOM: 06/13/2022 DSA SUBMITTAL

PROJECT No. :1-30-55
6/13/2022 10:25:59 AM

DRAWN BY: CHECKED BY:
ISSUE No.____ DATE____ DESCRIPTION____ REVISION No.____ DATE____ DESCRIPTION____
ISSUE No.____ DATE____ DESCRIPTION____ REVISION No.____ DATE____ DESCRIPTION____
ISSUE No.____ DATE____ DESCRIPTION____ REVISION No.____ DATE____ DESCRIPTION____
ISSUE No.____ DATE____ DESCRIPTION____ REVISION No.____ DATE____ DESCRIPTION____

RUHNAUCLARKE.COM
3775 TENTH STREET, RIVERSIDE CALIFORNIA 92501 (951) 684 4664 / 5751 PALMER WAY, SUITE C, CARLSBAD CALIFORNIA 92010 (760) 438 5899

GHS KITCHEN & WEIGHTROOM
GROSSMONT HIGH SCHOOL
1100 MURRAY DR, EL CAJON, CA 92020
GROSSMONT UNION HIGH SCHOOL

MECHANICAL TITLE-24

M0-0.3

1-30-55

WEIGHT ROOM BUILDING (CONTINUED)

Project Name:	Grossmont Weight Rm Bldg	NRCC-PRF-01-E	Page 10 of 15
Project Address:	1100 Murray Dr. El Cajon 92020	Calculation Date/Time:	15:07, Wed, Feb 23, 2022
Input File Name:	2022-02-21_6268_Grossmont Weight Rm Bldg.cibd19x		

O. DECLARATION OF REQUIRED CERTIFICATES OF INSTALLATION

Table Instructions: Selections shall be made by Documentation Author to indicate which Certificates of Installation must be submitted for the features to be recognized for compliance. These documents must be retained and provided to the building inspector during construction and can be found online at: https://www.energy.ca.gov/title24/2019standards/2019_compliance_documents/Nonresidential_Documents/NRCI/

Building Component	YES	NO	Form/Title	Field Inspector Pass	Field Inspector Fail
Envelope	☒	☐	NRCI-ENV-01-E - Must be submitted for all buildings	☐	☐
Mechanical	☒	☐	NRCI-MCH-01-E - Must be submitted for all buildings	☐	☐
Plumbing	☒	☐	NRCI-PLB-01-E - Must be submitted for all buildings	☐	☐
	☐	☒	NRCI-PLB-02-E - Must be submitted for high-rise residential and hotel/ motel central hot water distribution systems to be recognized for compliance	☐	☐
	☐	☒	NRCI-PLB-03-E - Must be submitted for high-rise residential and hotel/motel single dwelling unit hot water system distribution systems to be recognized for compliance	☐	☐
	☐	☒	NRCI-PLB-21-E - Must be HERS verified for central systems in high-rise residential hotel/ motel application	☐	☐
	☐	☒	NRCI-PLB-22-E - Must be HERS verified for single dwelling unit systems in high-rise residential, hotel/motel application	☐	☐
	☐	☒	NRCI-STH-01-E - Must be submitted for solar hot water heating systems	☐	☐
Indoor Lighting	☒	☐	NRCI-LTI-01-E - Must be submitted for all buildings	☐	☐
	☐	☒	NRCI-LTI-02-E - Must be submitted for a lighting control system, or for an Energy Management Control System (EMCS) to be recognized for compliance	☐	☐
	☐	☒	NRCI-LTI-04-E - Must be submitted for two interlocked systems serving an auditorium, a convention center, a conference room, a multipurpose room, or a theater to be recognized for compliance	☐	☐
	☐	☒	NRCI-LTI-05-E - Must be submitted for a Power Adjustment Factor (PAF) to be recognized for compliance	☐	☐
	☐	☒	NRCI-LTI-06-E - Must be submitted for additional wattage installed in a video conferencing studio to be recognized for compliance	☐	☐
Covered Process	☐	☒	NRCI-PRC-01-E - Must be submitted for all Covered Processes	☐	☐

Project Name:	Grossmont Weight Rm Bldg	NRCC-PRF-01-E	Page 11 of 15
Project Address:	1100 Murray Dr. El Cajon 92020	Calculation Date/Time:	15:07, Wed, Feb 23, 2022
Input File Name:	2022-02-21_6268_Grossmont Weight Rm Bldg.cibd19x		

P. DECLARATION OF REQUIRED CERTIFICATES OF ACCEPTANCE

Table Instructions: Selections shall be made by Documentation Author to indicate which Certificates of Acceptance must be submitted for the features to be recognized for compliance. These documents must be provided to the building inspector during construction and must be completed through an Acceptance Test Technician Certification Provider (ATCP). For more information visit: https://www.energy.ca.gov/title24/2019standards/2019_compliance_documents/Nonresidential_Documents/NRCA/

Building Component	YES	NO	Form/Title	Field Inspector Pass	Field Inspector Fail
Envelope	☒	☐	NRCA-ENV-02-F - NRFC label verification for fenestration	☐	☐
	☐	☐	NRCA-ENV-03-F - Daylighting Design PAFs	☐	☐
Indoor Lighting	☒	☐	NRCA-LTI-02-A - Occupancy Sensors and Automatic Time Switch Controls	☐	☐
	☐	☒	NRCA-LTI-03-A - Automatic Daylight Controls	☐	☐
	☐	☒	NRCA-LTI-04-A - Demand Responsive Lighting Controls	☐	☐
	☐	☒	NRCA-LTI-05-A - Institutional Tuning Power Adjustment Factor (PAF)	☐	☐
Covered Process	☐	☒	NRCA-PRC-02-F - Kitchen Exhaust	☐	☐
	☐	☒	NRCA-PRC-03-F - Garage Exhaust	☐	☐
	☐	☒	NRCA-PRC-12-F – Elevator Lighting and Ventilation Controls	☐	☐
	☐	☒	NRCA-PRC-13-F –Escalator and Moving Walkways Speed Control	☐	☐
	☐	☒	NRCA-PRC-14-F – Lab Exhaust Ventilation System	☐	☐
	☐	☒	NRCA-PRC-15-F - Fume Hood Automatic Sash Closures System	☐	☐

Project Name:	Grossmont Weight Rm Bldg	NRCC-PRF-01-E	Page 12 of 15
Project Address:	1100 Murray Dr. El Cajon 92020	Calculation Date/Time:	15:07, Wed, Feb 23, 2022
Input File Name:	2022-02-21_6268_Grossmont Weight Rm Bldg.cibd19x		

P. DECLARATION OF REQUIRED CERTIFICATES OF ACCEPTANCE

Table Instructions: Selections shall be made by Documentation Author to indicate which Certificates of Acceptance must be submitted for the features to be recognized for compliance. These documents must be provided to the building inspector during construction and must be completed through an Acceptance Test Technician Certification Provider (ATCP). For more information visit: https://www.energy.ca.gov/title24/2019standards/2019_compliance_documents/Nonresidential_Documents/NRCA/

Building Component	YES	NO	Form/Title	Field Inspector Pass	Field Inspector Fail
Mechanical	☒	☐	NRCA-MCH-02-A Outdoor Air must be submitted for all newly installed HVAC units. Note: MCH02-A can be performed in conjunction with MCH-07-A Supply Fan VFD Acceptance (if applicable) since testing activities overlap	☐	☐
	☒	☐	NRCA-MCH-03-A Constant Volume Single Zone HVAC	☐	☐
	☐	☒	NRCA-MCH-04(a)-H Air Distribution Duct Leakage - HERS Verification required	☐	☐
	☐	☐	NRCA-MCH-04(b)-A Air Distribution Duct Leakage - ATT only	☐	☐
	☒	☐	NRCA-MCH-05-A Air Economizer Controls	☐	☐
	☒	☐	NRCA-MCH-06-A Demand Control Ventilation Systems Acceptance must be submitted for all systems required to employ demand controlled ventilation (refer to §120.1(c)3) can vary outside ventilation flow rates based on maintaining interior carbon dioxide (CO2) concentration setpoints	☐	☐
	☐	☒	NRCA-MCH-07-A Supply Fan Variable Flow Controls	☐	☐
	☐	☒	NRCA-MCH-08-A Valve Leakage Test	☐	☐
	☐	☒	NRCA-MCH-09-A Supply Water Temperature Reset Controls	☐	☐
	☐	☒	NRCA-MCH-10-A Hydronic System Variable Flow Controls	☐	☐
	☐	☒	NRCA-MCH-11-A Automatic Demand Shed Controls	☐	☐
	☒	☐	NRCA-MCH-12-A FDD for Packaged Direct Expansion Units	☐	☐
	☐	☒	NRCA-MCH-13-A Automatic FDD for Air Handling Units and Zone Terminal Units Acceptance	☐	☐
	☐	☒	NRCA-MCH-14-A Distributed Energy Storage DX AC Systems Acceptance	☐	☐
	☐	☒	NRCA-MCH-15-A Thermal Energy Storage (TES) System Acceptance	☐	☐
	☐	☒	NRCA-MCH-16-A Supply Air Temperature Reset Controls	☐	☐
	☐	☒	NRCA-MCH-17-A Condenser Water Temperature Reset Controls	☐	☐
	☐	☒	NRCA-MCH-18 Energy Management Control Systems	☐	☐
	☐	☒	NRCA-MCH-19 Occupancy Sensor Controls	☐	☐

Project Name:	Grossmont Weight Rm Bldg	NRCC-PRF-01-E	Page 13 of 15
Project Address:	1100 Murray Dr. El Cajon 92020	Calculation Date/Time:	15:07, Wed, Feb 23, 2022
Input File Name:	2022-02-21_6268_Grossmont Weight Rm Bldg.cibd19x		

Q. DECLARATION OF REQUIRED CERTIFICATES OF VERIFICATION

Table Instructions: Selections shall be made by Documentation Author to indicate which Certificates of Verification must be submitted for the features to be recognized for compliance. These documents must be retained and provided to the building inspector during construction and can be found online at: https://www.energy.ca.gov/title24/2019standards/2019_compliance_documents/Nonresidential_Documents/NRCV/

Building Component	YES	NO	Form/Title	Field Inspector Pass	Field Inspector Fail
Mechanical	☐	☒	NRCV-MCH-04-H Duct Leakage Test	☐	☐
	☐	☒	NRCV-MCH-24-H Enclosure Air Leakage	☐	☐
	☐	☒	NRCV-MCH-27 Indoor Air Quality & Mechanical Ventilation	☐	☐
	☐	☒	NRCV-MCH-32-H Local Mechanical Exhaust	☐	☐
Plumbing	☐	☒	NRCV-PLB-21-H - HERS verified central systems in high-rise residential, hotel/motel application	☐	☐
	☐	☒	NRCV-PLB-22-H - HERS verified single dwelling unit systems in high-rise residential, hotel/motel application	☐	☐

R. UNMET LOAD HOURS

This Section Does Not Apply

Project Name:	Grossmont Weight Rm Bldg	NRCC-PRF-01-E	Page 14 of 15
Project Address:	1100 Murray Dr. El Cajon 92020	Calculation Date/Time:	09:19, Wed, Feb 23, 2022
Input File Name:	2022-02-21_6268_Grossmont Weight Rm Bldg.cibd19x		

DOCUMENTATION AUTHOR'S DECLARATION STATEMENT

I certify that this Certificate of Compliance documentation is accurate and complete.

Documentation Author Name: William A Hoeveler	Signature:
Company: MA Engineers	
Address: 5160 Carroll Canyon Rd Suite 200	Signature Date: 2022-02-23
City/State/Zip: San Diego CA 92121	CEA/ HERS Certification Identification (if applicable): FSB0-9D68-849F-3A88-3058-0CCA-802B-3E54-D3BC-4BDE-5D6B-CB8F-7A8C-612F-8139-1F71
Phone: 858-200-0030	

RESPONSIBLE PERSON'S DECLARATION STATEMENT

I certify the following under penalty of perjury, under the laws of the State of California:
1. The information provided on this Certificate of Compliance is true and correct.
2. I am eligible under Division 3 of the Business and Professions Code to accept responsibility for the building design or system design identified on this Certificate of Compliance (responsible designer)
3. The energy features and performance specifications, materials, components, and manufactured devices for the building design or system design identified on this Certificate of Compliance conform to the requirements of Title 24, Part 1 and Part 6 of the California Code of Regulations.
4. The building design features or system design features identified on this Certificate of Compliance are consistent with the information provided on other applicable compliance documents, worksheets, calculations, plans and specifications submitted to the enforcement agency for approval with this building permit application.
5. I will ensure that a completed signed copy of this Certificate of Compliance shall be made available with the building permit(s) issued for the building, and made available to the enforcement agency for all applicable inspections. I understand that a completed signed copy of this Certificate of Compliance is required to be included with the documentation the builder provides to the building owner at occupancy.

Responsible Envelope Designer Name: Roger Clarke	Signature:	
Company: Ruhnau Clarke Architects		
Address: 5751 Palmer Way, Suite B	Date Signed: 02-23-2022	
City/State/Zip: Carlsbad, CA 92010		
Phone: 706-438-5899	Title:	License: C-21340
Responsible Lighting Designer Name: Refer to Johnson Consulting Electrical Engineers	Signature:	
Company:		
Address:	Date Signed:	
City/State/Zip:		
Phone:	Title:	License #:
Responsible Mechanical Designer Name: Roy C. Campbell	Signature:	
Company: MA Engineers		
Address: 5160 Carroll Canyon Rd Suite 200	Date Signed: 02-23-2022	
City/State/Zip: San Diego CA 92121		
Phone: 858-200-0030	Title: Principal	License #: 025911

KITCHEN BUILDING

Project Name:	Kitchen Bldg	NRCC-PRF-01-E	Page 1 of 12
Project Address:	1100 Murray Dr. El Cajon 92020	Calculation Date/Time:	10:42, Thu, Feb 24, 2022
Input File Name:	2022-02-24_6268_Grossmont Kitchen Bldg Htg chgs TL Complies.cibd19x		

A. GENERAL INFORMATION

1	Project Location (city)	El Cajon	8	Standards Version	Compliance2019
2	CA Zip Code	92020	9	Compliance Software (version)	EnergyPro 8.2
3	Climate Zone	10	10	Weather File	SAN-DIEGO-GILLESPIE_722907_CZ2010.epw
4	Total Conditioned Floor Area in Scope	1,825 ft²	11	Building Orientation (deg)	(N) 0 deg
5	Total Unconditioned Floor Area	0 ft²	12	Permitted Scope of Work	NewComplete
6	Total # of Stories (Habitable Above Grade)	1	13	Building Type(s)	Nonresidential
7	Total # of dwelling units	0	14	Gas Type	NaturalGas

B. PROJECT SUMMARY

Table Instructions: Table B shows which building components are included in the performance calculation. If indicated as not included, the project must show compliance prescriptively if within permit application.

Building Components Complying via Performance					Building Components Complying Prescriptively	
Envelope (see Table G)	☒ Performance	Covered Process: Commercial Kitchens	☒ Performance	The following building components are ONLY eligible for prescriptive compliance and should be documented on the NRCC form listed if within the scope of the permit application (i.e. compliance will not be shown on the NRCC-PRF-E).		
	☐ Not Included		☐ Not included			
Mechanical (see Table H)	☒ Performance	Covered Process: Computer Rooms	☐ Performance	Indoor Lighting (Unconditioned)§140.6	NRCC-LTI-E	
	☐ Not Included		☒ Not included	Outdoor Lighting §140.7	NRCC-LTO-E	
Domestic Hot Water (see Table I)	☒ Performance	Covered Process: Laboratory Exhaust	☐ Performance	Sign Lighting §140.8	NRCC -LTS-E	
	☐ Not Included		☒ Not included	Mandatory Measures		
Lighting (Indoor Conditioned, see Table K)	☒ Performance			Electrical power systems, commissioning, solar ready, elevator and escalator requirements are mandatory and should on the NRCC form listed if applicable (i.e. compliance will not be shown on the NRCC-PRF-E.)		
	☐ Not Included			Electrical Power Distribution 5110.11	NRCC-ELC-E	
Solar Thermal Water Heating (see Table I)	☐ Performance			Commissioning 5120.8	NRCC-CXR-E	
	☒ Not Included			Solar Ready 5110.10	NRCC-SRA-E	

Project Name:	Kitchen Bldg	NRCC-PRF-01-E	Page 2 of 12
Project Address:	1100 Murray Dr. El Cajon 92020	Calculation Date/Time:	10:42, Thu, Feb 24, 2022
Input File Name:	2022-02-24_6268_Grossmont Kitchen Bldg Htg chgs TL Complies.cibd19x		

C1. COMPLIANCE RESULTS FOR PERFORMANCE COMPONENTS (Annual TDV Energy Use, kBtu/ft²-yr)

COMPLIES

Energy Component	Standard Design (TDV)	Proposed Design (TDV)	Compliance Margin (TDV)[1]
Space Heating	3.43	5.38	-1.95
Space Cooling	104.62	111.54	-6.92
Indoor Fans	306.43	203.97	102.46
Heat Rejection	--	--	--
Pumps & Misc.	--	--	--
Domestic Hot Water	13.70	33.13	-19.43
Indoor Lighting	94.80	98.88	-4.08
ENERGY STANDARDS COMPLIANCE TOTAL	**522.98**	**452.90**	**70.08 (13.4%)**

[1] *Notes: The number in parenthesis following the Compliance Margin in column 4. represents the Percent Better than Standard.*

C2. RESULTS FOR 'ABOVE CODE' QUALIFICATIONS[1]

☐ This project is pursuing CalGreen Tier 1 ☐ This project is pursuing CalGreen Tier 2

Miscellaneous Energy Component	Standard Design (TDV)	Proposed Design (TDV)	Compliance Margin (TDV)[1]
Receptacle	273.94	273.94	--
Process	135.87	135.87	--
Other Ltg	--	--	--
Process Motors	--	--	--
COMPLIANCE TOTAL PLUS MISCELLANEOUS COMPONENTS	**932.79**	**862.71**	**70.1 (7.5%)**

[1] *Notes: This table is used to document compliance with programs OTHER THAN Title 24 Part 6, if applicable.*

Project Name:	Kitchen Bldg	NRCC-PRF-01-E	Page 3 of 12
Project Address:	1100 Murray Dr. El Cajon 92020	Calculation Date/Time:	10:42, Thu, Feb 24, 2022
Input File Name:	2022-02-24_6268_Grossmont Kitchen Bldg Htg chgs TL Complies.cibd19x		

C3. ENERGY USE SUMMARY

Energy Component	Standard Design Site (MWh)	Proposed Design Site (MWh)	Margin (MWh)	Standard Design Site (MBtu)	Proposed Design Site (MBtu)	Margin (MBtu)
Space Heating	--	--	--	3.0	4.9	-1.9
Space Cooling	5.8	4.3	1.5	--	--	--
Indoor Fans	19.6	11.6	8.0	--	--	--
Heat Rejection	--	--	--	--	--	--
Pumps & Misc.	--	--	--	--	--	--
Domestic Hot Water	--	2.1	--	13.8	--	--
Indoor Lighting	5.9	6.2	-0.3	--	--	--
Compliance Total	**31.3**	**24.2**	**7.1**	**16.8**	**4.9**	**11.9**
Receptacle	11.8	11.8	0.0	85.3	85.3	0.0
Process	9.1	9.1	0.0	--	--	--
Other Ltg	--	--	--	--	--	--
Process Motors	--	--	--	--	--	--
TOTAL	**52.2**	**45.1**	**7.1**	**102.1**	**90.2**	**11.9**

D. EXCEPTIONAL CONDITIONS

This project uses the Simplified Geometry Performance Modeling Approach which is not capable of modeling daylighting controls and assumes the prescriptive Secondary Daylit Control requirements are met. PRESCRIPTIVE COMPLIANCE documentation (form NRCC-LTI-02-E) for the requirements of section 140.6(d) Automatic Daylighting Controls in Secondary Daylit Zones is required.

E. HERS VERIFICATION

This Section Does Not Apply

Project Name:	Kitchen Bldg	NRCC-PRF-01-E	Page 4 of 12
Project Address:	1100 Murray Dr. El Cajon 92020	Calculation Date/Time:	10:42, Thu, Feb 24, 2022
Input File Name:	2022-02-24_6268_Grossmont Kitchen Bldg Htg chgs TL Complies.cibd19x		

G1. ENVELOPE GENERAL INFORMATION (conditioned spaces only)

1 Opaque Surfaces & Orientation	2 Total Gross Surface Area (ft²)	3 Total Fenestration Area (ft²)	4 Window to Wall Ratio (%)
North-Facing[1]	0 ft²	0 ft²	00.0%
East-Facing[2]	630 ft²	0 ft²	00.0%
South-Facing[3]	426 ft²	4 ft²	00.9%
West-Facing[4]	372 ft²	0 ft²	00.0%
Total	**1,428 ft²**	**4 ft²**	**00.3%**
Roof	1,825 ft²	0 ft²	00.0%

Notes:
[1] *North-Facing is oriented to within 45 degrees of true north, including 45°00'00" east of north (NE), but excluding 45°00'00" west of north (NW).*
[2] *East-Facing is oriented to within 45 degrees of true east, including 45°00'00" south of east (SE), but excluding 45°00'00" north of east (NE).*
[3] *South-Facing is oriented to within 45 degrees of true south, including 45°00'00" west of south (SW), but excluding 45°00'00" east of south (SE).*
[4] *West-Facing is oriented to within 45 degrees of true west, including 45°00'00" north of due west (NW), but excluding 45°00'00" south of west (SW).*

G3. OPAQUE SURFACE ASSEMBLY SUMMARY

1 Surface Name	2 Surface Type	3 Area (ft²)	4 Framing Type	5 Cavity R-Value	6 Continuous R-Value	7 Units	8 Value	9 Description of Assembly Layers	10 Status[1]
R-19 Wall9	ExteriorWall	1428	Wood	19	NA	U-Factor	0.072	Stucco - 7/8 in. Vapor permeable felt - 1/8 in. Wood framed wall, 16in. OC, 5.5in., R-19 Gypsum Board - 1/2 in.	N
R-30 Roof No Attic15	Roof	1825	Wood	30	NA	U-Factor	0.034	Asphalt shingles - 1/4 in. Vapor permeable felt - 1/8 in. Plywood - 1/2 in. Air - Cavity - Wall Roof Ceiling - 4 in. or more Wood framed roof, 16in. OC, 11.25in., R-30 Gypsum Board - 1/2 in.	N

STAMPS

IDENTIFICATION STAMP
DIV. OF THE STATE ARCHITECT
APP: 04-120895 INC:
REVIEWED FOR
SS ☑ FLS ☑ ACS ☑
DATE: 06/27/2022

CONSULTANT BRANDING

MA ENGINEERS
5160 Carroll Canyon Rd, Suite 200
San Diego, California 92121
T: 858 200-0030 www.ma-eng.com

RUHNAU CLARKE ARCHITECTS

GHS KITCHEN & WEIGHTROOM: 06/13/2022 DSA SUBMITTAL

PROJECT No. :1-30-55
6/13/2022 10:26:00 AM

DRAWN BY: CHECKED BY:
ISSUE No.____ DATE____ DESCRIPTION____
REVISION No.____ DATE____ DESCRIPTION____

STAMPS

REGISTERED PROFESSIONAL ENGINEER ROY C. CAMPBELL No. M 025911 EXP. 6-30-23 MECHANICAL STATE OF CALIFORNIA

LICENSED ARCHITECT ROGER CLARKE No. C-21340 Exp. 10-31-23 STATE OF CALIFORNIA

IDENTIFICATION STAMP
DIV. OF THE STATE ARCHITECT
APP: 04-120895 INC:
REVIEWED FOR
SS ☑ FLS ☑ ACS ☑
DATE: 06/27/2022

CONSULTANT BRANDING

MA ENGINEERS
5160 Carroll Canyon Rd, Suite 200
San Diego, California 92121
Consulting Mechanical Engineers
T. 858 200-0030 www.ma-engr.com

RUHNAU CLARKE ARCHITECTS

KITCHEN BUILDING (CONTINUED)

Project Name:	Kitchen Bldg	NRCC-PRF-01-E	Page 5 of 12
Project Address:	1100 Murray Dr. El Cajon 92020	Calculation Date/Time:	10:42, Thu, Feb 24, 2022
Input File Name:	2022-02-24_6268_Grossmont Kitchen Bldg Htg chgs TL Complies.cibd19x		

G3. OPAQUE SURFACE ASSEMBLY SUMMARY

1	2	3	4	5	6	7	8	9	10
Surface Name	Surface Type	Area (ft²)	Framing Type	Cavity R-Value	Continuous R-Value	Units	Value	Description of Assembly Layers	Status¹
Slab On Grade17	UndergroundFloor	1825	NA	0	NA	F-Factor	0.73	Slab Type = UnheatedSlabOnGrade Insulation Orientation = None Insulation R-Value = R0	N
R-0 Wall19	InteriorWall	1684	NA	0	NA	U-Factor	0.337	Stucco - 7/8 in. Vapor permeable felt - 1/8 in. Air - Cavity - Wall Roof Ceiling - 4 in. or more Gypsum Board - 1/2 in.	N

¹ Status: N - New, A – Altered, E – Existing

G4. OPAQUE DOOR SUMMARY

1	2	3
Assembly Name	Overall U-factor	Status¹
Insulated Door13	0.200	N

G5. FENESTRATION ASSEMBLY SUMMARY

1	2	3	4	5	6	7	8	9
Fenestration Assembly Name / Tag or I.D.	Fenestration Type / Product Type / Frame Type	Certification Method¹	Assembly Method	Area ft²	Overall U-factor	Overall SHGC	Overall VT	Status²
PPG SOLARBAN 60 (3) Caribia	VerticalFenestration FixedWindow MetalFraming	COG Equations	SiteBuilt	4	0.29 (COG)	0.31 (COG)	0.50 (COG)	N

¹ Newly installed fenestration shall have a certified NFRC Label Certificate or use the CEC default tables found in Table 110.6-A and Table 110.6-B. Center of Glass (COG) values are for the glass-only; determined by the manufacturer, and are shown for ease of verification. Site-built fenestration values are calculated per Nonresidential Appendix NA6 and are used in the analysis.
² Status: N - New, A – Altered, E – Existing

Project Name:	Kitchen Bldg	NRCC-PRF-01-E	Page 6 of 12
Project Address:	1100 Murray Dr. El Cajon 92020	Calculation Date/Time:	10:42, Thu, Feb 24, 2022
Input File Name:	2022-02-24_6268_Grossmont Kitchen Bldg Htg chgs TL Complies.cibd19x		

H1. DRY SYSTEM EQUIPMENT (furnaces, air handling units, heat pumps, VRF, economizers etc.)

1	2	3	4	5	6	7	8	9	10	11	12
			Heating				Cooling				
Equipment Name	Equipment Type	Qty	Total Heating Output (kBtu/h)	Supp Heat Output (kBtuh)	Efficiency Unit	Efficiency	Total Cooling Output (kBtu/h)	Efficiency Unit	Efficiency	Economizer Type (if present)	Status⁵
RTU-K-1 Captive Aire Unit	SZVAVAC (Packaged3Phase)	1	33	0	AFUE	100.0	107	EER	11.1	NoEconomizer	N
RTU-K-2 Gas / DX	SZVAVAC (Packaged3Phase)	1	60	0	AFUE	100.0	49	SEER EER	16.10 12.20	DifferentialEnthalpy	N

¹ Status: N - New, A – Altered, E – Existing

H2. FAN SYSTEMS SUMMARY¹

1	2	3	4	5	6	7	8	9	10	11	12	13
	System Type	Design OA	Supply Fan				Return Fan					
Name or Item Tag	packaged, DOAS, etc.	CFM	CFM	BHP	Watts	Control	CFM	BHP	Watts	Control	Economizer Type (if present)	Status⁵
RTU-K-1 Captive Aire Unit	SZVAVAC	154	4000	4.000	3332.3	VariableSpeedDrive	NA	NA	NA	NA	NoEconomizer	N
RTU-K-2 Gas / DX	SZVAVAC	120	1600	0.620	540.7	VariableSpeedDrive	NA	NA	NA	NA	DifferentialEnthalpy	N

¹ Status: N - New, A – Altered, E – Existing

H3. EXHAUST FAN SUMMARY

1	2	3	4	5	6	7
System ID	Zone Name	Qty	CFM	Motor BHP	Motor Watts	Total Static Pressure (in H20)
Kitchen3	1-Kitchen	1	3,500	3.250	2707.5	2.95

Project Name:	Kitchen Bldg	NRCC-PRF-01-E	Page 7 of 12
Project Address:	1100 Murray Dr. El Cajon 92020	Calculation Date/Time:	10:42, Thu, Feb 24, 2022
Input File Name:	2022-02-24_6268_Grossmont Kitchen Bldg Htg chgs TL Complies.cibd19x		

H4. Wet System Equipment (boilers, chillers, cooling towers, etc.)

1	2	3	4	5	6	7	8	9	10	11	12
							Pumps				
Name or Item Tag	Equipment Type	Qty	Vol (gal)	Rated Capacity (kBtu/h)	Efficiency	Standby Loss	Qty	GPM	HP	VSD (Y/N)	Status¹

¹ Status: N - New, A – Altered, E – Existing

H5. SYSTEM SPECIAL FEATURES

1	2	3	4	5	6
System Name	Optimum Start	Window Interlocks per §140.4(n)	Evaporative Cooling	Heat Recovery	Other Controls
RTU-K-1 Captive Aire Unit	No Optimum Start	NA	No Evaporative Cooler	No Heat Recovery	No DCV Controls, No DDC No Economizer No Supply Air Temp. Control
RTU-K-2 Gas / DX	No Optimum Start	NA	No Evaporative Cooler	No Heat Recovery	1 Zones With CO2Sensor Vent. Control, No DDC Differential Enthalpy Economizer No Supply Air Temp. Control
Kitchen Bldg1 - SHW	NA	NA	NA	NA	Fixed Temperature Control, No DDC

Notes: This table includes controls related to the performance path only. For projects using the prescriptive path, mandatory and prescriptive controls requirements are documented on the NRCC-MCH-E

H6. MECHANICAL VENTILATION

1	2	3	4	5	6	7	8	9
	Mechanical Ventilation							
Zone Name	Ventilation Function	# hotel rooms	# of people	# of bedrooms	Supply OA CFM	Exhaust CFM	Conditioned Area (sf)	DCV or Occupant Sensor Controls, or Both
1-Kitchen	Food Service - Kitchen (cooking)	0	5.12	0	154	3500	1025	NA
2-Serving Lines	Misc - All others	0	4.00	0	120	0	800	NA

Multifamily or Hotel/Motel Occupancy? (if "Yes", see DOMESTIC/SERVICE HOT WATER SYSTEM SUMMARY)	No
Does the Project include Zonal Systems?	No

Project Name:	Kitchen Bldg	NRCC-PRF-01-E	Page 8 of 12
Project Address:	1100 Murray Dr. El Cajon 92020	Calculation Date/Time:	10:42, Thu, Feb 24, 2022
Input File Name:	2022-02-24_6268_Grossmont Kitchen Bldg Htg chgs TL Complies.cibd19x		

H7. ZONAL SYSTEM AND TERMINAL UNIT SUMMARY

1	2	3	4	5	6	7	8	9	10	11	12
			Rated Capacity (kBtuh)		Airflow (cfm)			Fan			
System ID	Zone Name	System Type	Heating	Cooling	Design	Min.	Min. Ratio	BHP	Watts	Cycles	ECM Motor
1-Kitchen-Trm	1-Kitchen	VAVNoReheatBox	NA	NA	4000	0	0.00	NA	NA	NA	☐
2-Serving Lines-Trm	2-Serving Lines	VAVNoReheatBox	NA	NA	1600	0	0.00	NA	NA	NA	☐

H8. EVAPORATIVE COOLER SUMMARY

This Section Does Not Apply

I1. WATER HEATER EQUIPMENT SUMMARY

1	2	3	4	5	6	7	8	9	10	11	12	13	14
Name	Heater Element Type	Tank Type	Qty	Tank Vol (gal)	Rated Input	Rated Input Unit	Efficiency	Efficiency Unit	Tank Insulation R-value (Int/Ext)	Standby Loss Fraction	Heat Pump Type	1st Hour Rating or Flow Rate (gal)	Tank Location or Ambient Condition
30 Gallon Electric2	Electricity	Storage	1	30.00	6.0	kW	0.93	UEF	NA	NA	NA	80	NA

J2. COMMERCIAL KITCHENS

1	2	3	4	5
Space Name	Exhaust Hood Style	Exhaust Hood Duty	Exhaust Length (ft)	Exhaust Flow Rate (cfm)
S-1-Kitchen	WallMountedCanopy	Light	16	3,500
	None	Light		
		Light		
		Light		
		Light		

Project Name:	Kitchen Bldg	NRCC-PRF-01-E	Page 9 of 12
Project Address:	1100 Murray Dr. El Cajon 92020	Calculation Date/Time:	10:42, Thu, Feb 24, 2022
Input File Name:	2022-02-24_6268_Grossmont Kitchen Bldg Htg chgs TL Complies.cibd19x		

K1. INDOOR CONDITIONED LIGHTING GENERAL INFO

1	2	3	4	5	6
				Additional (Custom) Allowance	
Occupancy Type ¹	Conditioned Floor Area ² (ft²)	Installed Lighting Power (Watts)	Lighting Control Credits (Watts)	Area Category Footnotes (Watts)	Tailored Method (Watts)
Kitchen/Food Preparation Area	1,025	974	0	0	0
All other	800	320	0	0	0
Building Totals:	1,825	1,294	0	0	0

¹ See Table 140.6-C
² See NRCC-LTI-01-E for unconditioned spaces
³ Lighting information for existing spaces modeled is not included in the table

K4. INDOOR CONDITIONED LIGHTING MANDATORY LIGHTING CONTROLS

Building Level Controls

1	2
Mandatory Demand Response §110.12(c)	Shut-Off Controls §130.1(c)
Required	Required

Area Level Controls (includes all lighting controls installed in conditioned space to meet mandatory requirements per §130.1)

4	5	6	7	8	9	10
Area Description	Area Category Primary Function Area	Area Controls 130.1(a)	Multi-Level Controls 130.1(b)	Shut-Off Controls 130.1(c)	Primary Daylighting 130.1(d)	Secondary Daylighting 140.5(d)

Project Name:	Kitchen Bldg	NRCC-PRF-01-E	Page 10 of 12
Project Address:	1100 Murray Dr. El Cajon 92020	Calculation Date/Time:	10:42, Thu, Feb 24, 2022
Input File Name:	2022-02-24_6268_Grossmont Kitchen Bldg Htg chgs TL Complies.cibd19x		

L. DECLARATION OF REQUIRED CERTIFICATES OF INSTALLATION

Table Instructions: Selections shall be made by Documentation Author to indicate which Certificates of Installation must be submitted for the features to be recognized for compliance. These documents bust be retained and provided to the building inspector during construction and can be found online at: https://www.energy.ca.gov/title24/2019standards/2019_compliance_documents/Nonresidential_Documents/NRCI/

Building Component	Form/Title
Envelope	NRCI-ENV-01-E - Must be submitted for all buildings
Mechanical	NRCI-MCH-01-E - Must be submitted for all buildings
Plumbing	NRCI-PLB-01-E - Must be submitted for all buildings
Indoor Lighting	NRCI-LTI-01-E - Must be submitted for all buildings
Covered Process	NRCI-PRC-01-E - Must be submitted for all Covered Processes

Project Name:	Kitchen Bldg	NRCC-PRF-01-E	Page 11 of 12
Project Address:	1100 Murray Dr. El Cajon 92020	Calculation Date/Time:	10:42, Thu, Feb 24, 2022
Input File Name:	2022-02-24_6268_Grossmont Kitchen Bldg Htg chgs TL Complies.cibd19x		

M. DECLARATION OF REQUIRED CERTIFICATES OF ACCEPTANCE

Table Instructions: Selections shall be made by Documentation Author to indicate which Certificates of Acceptance must be submitted for the features to be recognized for compliance. These documents must be provided to the building inspector during construction and must be completed through an Acceptance Test Technician Certification Provider (ATTCP). For more information visit:https://www.energy.ca.gov/title24/2019standards/2019_compliance_documents/Nonresidential_Documents/NRCA/

Building Component	Form/Title
Envelope	NRCA-ENV-02-F - NRFC label verification for fenestration
Indoor Lighting	NRCA-LTI-02-A - Occupancy Sensors and Automatic Time Switch Controls
Covered Process	NRCA-PRC-02-F - Kitchen Exhaust
Mechanical	NRCA-MCH-02-A Outdoor Air must be submitted for all newly installed HVAC units. Note: MCH02-A can be performed in conjunction with MCH-07-A Supply Fan VFD Acceptance (if applicable) since testing activities overlap
	NRCA-MCH-05-A Air Economizer Controls
	NRCA-MCH-06-A Demand Control Ventilation Systems Acceptance must be submitted for all systems required to employ demand controlled ventilation (refer to §120.1(c)3) can vary outside ventilation flow rates based on maintaining interior carbon dioxide (CO2) concentration setpoints
	NRCA-MCH-07-A Supply Fan Variable Flow Controls
	NRCA-MCH-20 Multifamily Ventilation

Project Name:	Kitchen Bldg	NRCC-PRF-01-E	Page 12 of 12
Project Address:	1100 Murray Dr. El Cajon 92020	Calculation Date/Time:	10:42, Thu, Feb 24, 2022
Input File Name:	2022-02-24_6268_Grossmont Kitchen Bldg Htg chgs TL Complies.cibd19x		

DOCUMENTATION AUTHOR'S DECLARATION STATEMENT

I certify that this Certificate of Compliance documentation is accurate and complete

Documentation Author Name: William A Hoeveler	Signature: [signature]
Company: MA Engineers	
Address: 5160 Carroll Canyon Rd Suite 200	Signature Date: 2022-02-23
City/State/Zip: San Diego CA 92121	CEA/ HERS Certification Identification (if applicable): F58D-9D68-849F-3A88-3058-0CCA-B02B-3E54-D3BC-4BDE-5D6B-CBBF-7A8C-612F-8139-1F71
Phone: 858-200-0030	

RESPONSIBLE PERSON'S DECLARATION STATEMENT

I certify the following under penalty of perjury, under the laws of the State of California:

1. The information provided on this Certificate of Compliance is true and correct.
2. I am eligible under Division 3 of the Business and Professions Code to accept responsibility for the building design or system design identified on this Certificate of Compliance (responsible designer)
3. The energy features and performance specifications, materials, components, and manufactured devices for the building design or system design identified on this Certificate of Compliance conform to the requirements of Title 24, Part 1 and Part 6 of the California Code of Regulations.
4. The building design features or system design features identified on this Certificate of Compliance are consistent with the information provided on other applicable compliance documents, worksheets, calculations, plans and specifications submitted to the enforcement agency for approval with this building permit application.
5. I will ensure that a completed signed copy of this Certificate of Compliance shall be made available with the building permit(s) issued for the building, and made available to the enforcement agency for all applicable inspections. I understand that a completed signed copy of this Certificate of Compliance is required to be included with the documentation the builder provides to the building owner at occupancy.

Responsible Envelope Designer Name: Roger Clarke	Signature: [signature]	
Company: Ruhnau Clarke Architects		
Address: 5751 Palmer Way, Suite B	Date Signed: 02-23-2022	
City/State/Zip: Carlsbad, CA 92010		
Phone: 706-438-5899	Title:	License: C-21340
Responsible Lighting Designer Name: Refer to Johnson Consulting Electrical Engineers	Signature:	
Company:		
Address:	Date Signed:	
City/State/Zip:		
Phone:	Title:	License #:
Responsible Mechanical Designer Name: Roy C. Campbell	Signature: Roy C Campbell	
Company: MA Engineers		
Address: 5160 Carroll Canyon Rd Suite 200	Date Signed: 02-23-2022	
City/State/Zip: San Diego CA 92121		
Phone: 858-200-0030	Title: Principal	License #: 025911

PROJECT No. :1-30-55
6/13/2022 10:26:00 AM

DRAWN BY: CHECKED BY:
ISSUE No.___ DATE___ DESCRIPTION___ REVISION No.___ DATE___ DESCRIPTION___
ISSUE No.___ DATE___ DESCRIPTION___ REVISION No.___ DATE___ DESCRIPTION___
ISSUE No.___ DATE___ DESCRIPTION___ REVISION No.___ DATE___ DESCRIPTION___
ISSUE No.___ DATE___ DESCRIPTION___ REVISION No.___ DATE___ DESCRIPTION___

RUHNAUCLARKE.COM
3775 TENTH STREET, RIVERSIDE CALIFORNIA 92501 (951) 684 4664 / 5751 PALMER WAY, SUITE C, CARLSBAD CALIFORNIA 92010 (760) 438 5899

GHS KITCHEN & WEIGHTROOM
GROSSMONT HIGH SCHOOL
1100 MURRAY DR, EL CAJON, CA 92020
GROSSMONT UNION HIGH SCHOOL

MECHANICAL TITLE-24 **M0-0.5**

1-30-55

GHS KITCHEN & WEIGHTROOM: 06/13/2022 DSA SUBMITTAL

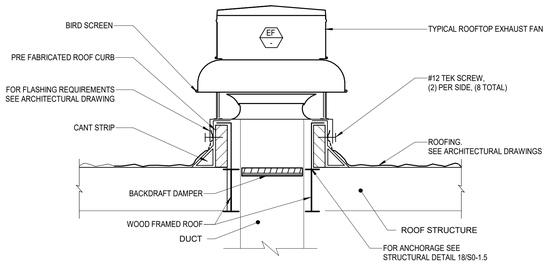

6 ROOF MOUNTED DOWNBLAST EXHAUST FAN DETAIL
NO SCALE

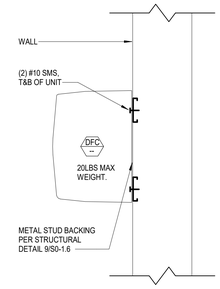

MOUNTING TO WOOD STUD WALL

3 DFC MOUNTING DETAIL
NO SCALE

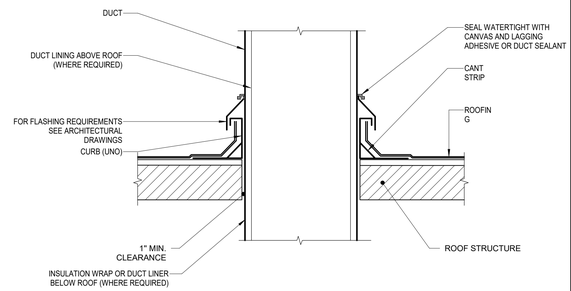

7 DUCT THROUGH ROOF DETAIL
NO SCALE

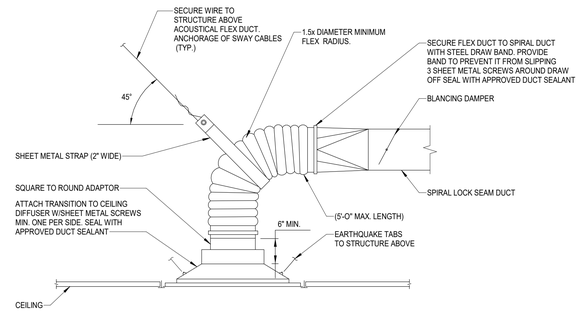

4 CEILING DIFFUSER CONNECTION DETAIL
NO SCALE

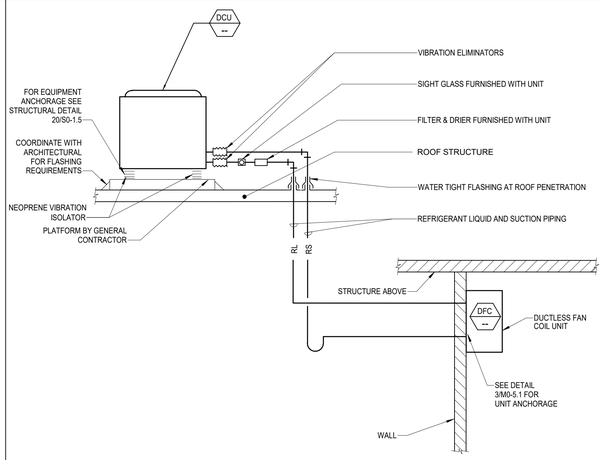

5 DUCTLESS SPLIT SYSTEM DETAIL
NO SCALE

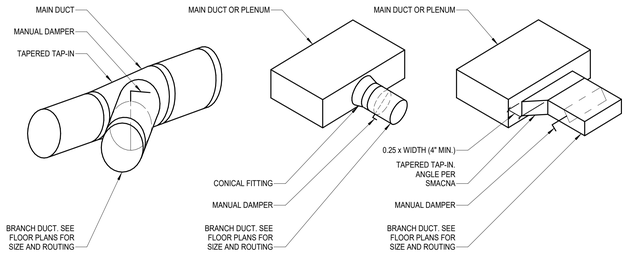

1 BRANCH DUCT TAKEOFF DETAIL
NO SCALE

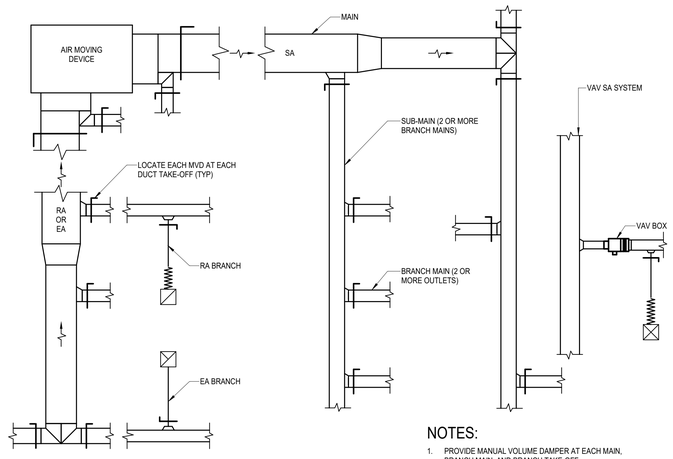

NOTES:

1. PROVIDE MANUAL VOLUME DAMPER AT EACH MAIN, BRANCH MAIN, AND BRANCH TAKE-OFF.
2. ENSURE CEILING ACCESS TO MVD OR PROVIDE REMOTE OPERATION WHERE DAMPER IS NOT ACCESSIBLE.

2 TYPICAL MANUAL VOLUME DAMPER LOCATION DIAGRAM
NO SCALE

STAMPS

IDENTIFICATION STAMP
DIV. OF THE STATE ARCHITECT
APP: 04-120895 INC:
REVIEWED FOR
SS ☑ FLS ☑ ACS ☑
DATE: 06/27/2022

CONSULTANT BRANDING

MA ENGINEERS
5160 Carroll Canyon Rd, Suite 200
San Diego, California 92121
Mechanical Engineers
T: 858 205-0030 www.ma-eng.com

RUHNAU CLARKE ARCHITECTS

GHS KITCHEN & WEIGHTROOM: 06/13/2022 DSA SUBMITTAL

PROJECT No. :1-30-55
6/13/2022 1:15:18 PM

DRAWN BY: CHECKED BY:

ISSUE No.	DATE	DESCRIPTION	REVISION No.	DATE	DESCRIPTION
ISSUE No.	DATE	DESCRIPTION	REVISION No.	DATE	DESCRIPTION
ISSUE No.	DATE	DESCRIPTION	REVISION No.	DATE	DESCRIPTION
ISSUE No.	DATE	DESCRIPTION	REVISION No.	DATE	DESCRIPTION

RUHNAUCLARKE.COM
3775 TENTH STREET, RIVERSIDE CALIFORNIA 92501 (951) 684 4664 / 5751 PALMER WAY, SUITE C, CARLSBAD CALIFORNIA 92010 (760) 438 5899

GHS KITCHEN & WEIGHTROOM
GROSSMONT HIGH SCHOOL
1100 MURRAY DR, EL CAJON, CA 92020
GROSSMONT UNION HIGH SCHOOL

MECHANICAL DETAILS **M0-5.1**

1-30-55

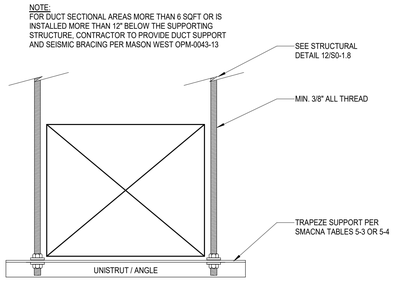

6 DUCT HANGER DETAIL 3
NO SCALE

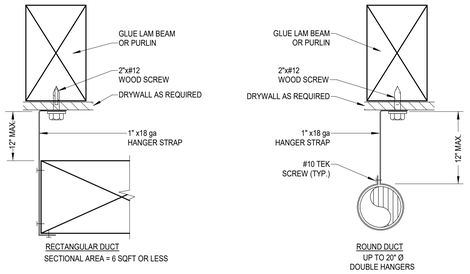

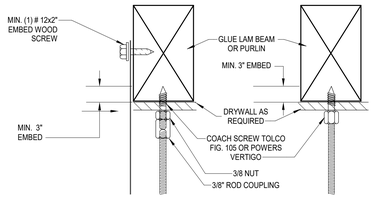

4 DUCT HANGER DETAIL 1
NO SCALE

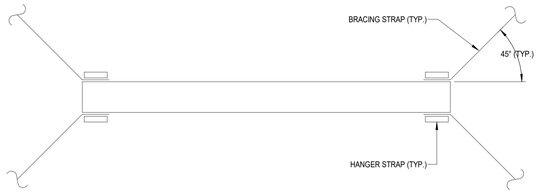

PLAN VIEW

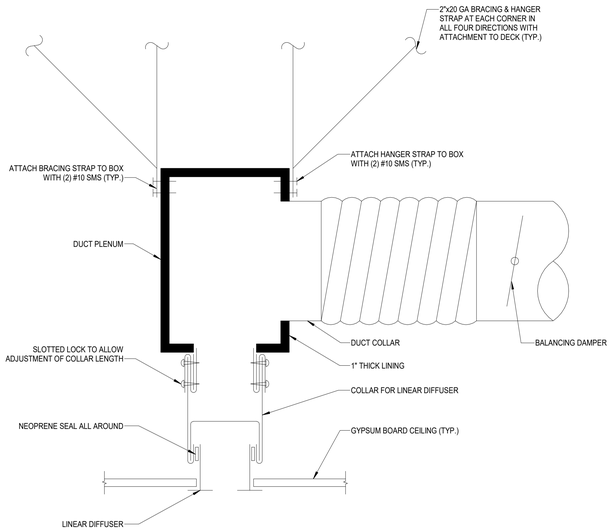

3 LINEAR CEILING DIFFUSER DETAIL
NO SCALE

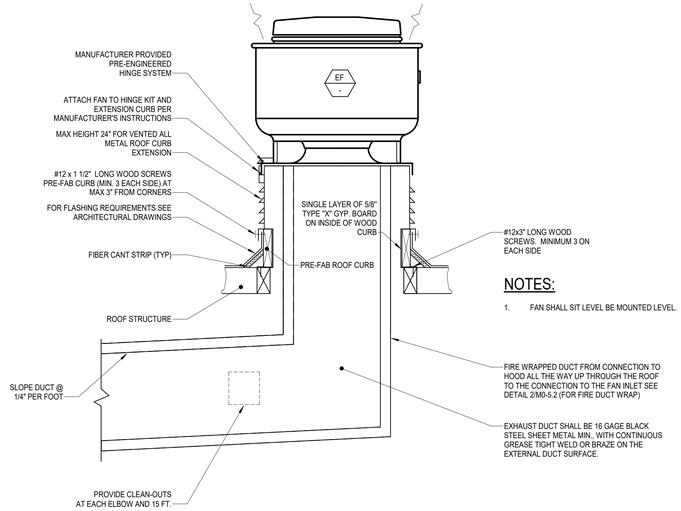

NOTES:

1. FAN SHALL SIT LEVEL BE MOUNTED LEVEL.

1 KITCHEN EXHAUST FAN MOUNTING DETAIL
NO SCALE

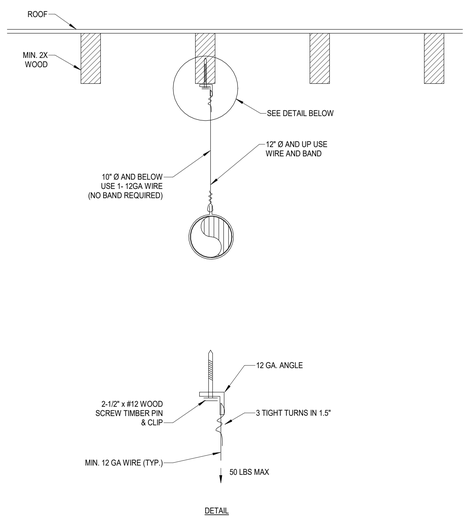

7 DUCT HANGER DETAIL 4
NO SCALE

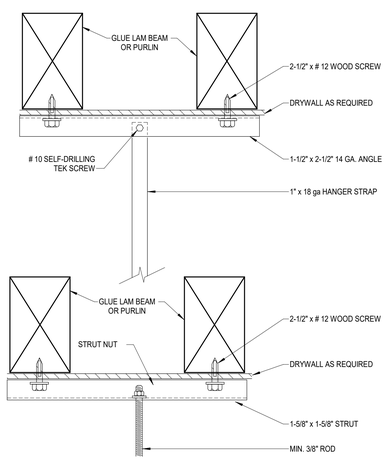

5 DUCT HANGER DETAIL 2
NO SCALE

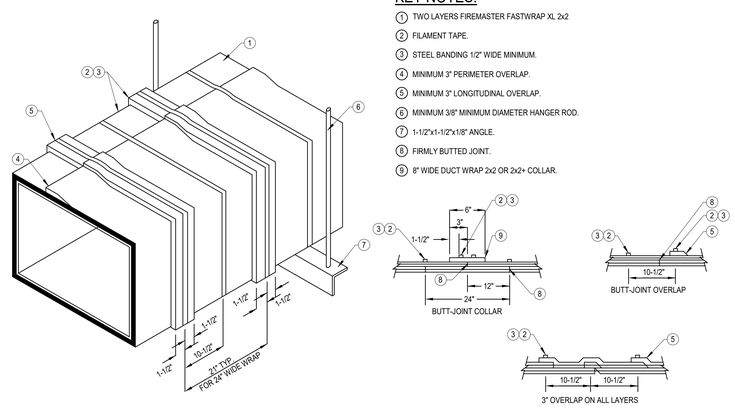

KEY NOTES:

1. TWO LAYERS FIREMASTER FASTWRAP XL 2x2
2. FILAMENT TAPE.
3. STEEL BANDING 1/2" WIDE MINIMUM.
4. MINIMUM 3" PERIMETER OVERLAP.
5. MINIMUM 3" LONGITUDINAL OVERLAP.
6. MINIMUM 3/8" MINIMUM DIAMETER HANGER ROD.
7. 1-1/2"x1-1/2"x1/8" ANGLE.
8. FIRMLY BUTTED JOINT.
9. 8" WIDE DUCT WRAP 2x2 OR 2x2+ COLLAR.

2 FIRE DUCT WRAP DETAIL
NO SCALE

REGISTERED PROFESSIONAL ENGINEER — TROY C. CAMPBELL — Reg. M 025911 — EXP. 6-30-23 — MECHANICAL — STATE OF CALIFORNIA
LICENSED ARCHITECT — RIVER CLARKE — No. C-21360 — Exp. 12-31-23 — STATE OF CALIFORNIA
STAMPS

IDENTIFICATION STAMP
DIV. OF THE STATE ARCHITECT
APP: 04-120895 INC:
REVIEWED FOR
SS ☑ FLS ☑ ACS ☑
DATE: 06/27/2022
ACCESSIBILITY NOT REVIEWED

CONSULTANT BRANDING
MA ENGINEERS
5160 Carroll Canyon Rd, Suite 200
San Diego, California 92121
Construction Management Engineers
T: 858 208-0030 www.ma-eng.com

RUHNAU CLARKE ARCHITECTS

GHS KITCHEN & WEIGHTROOM: 06/13/2022 DSA SUBMITTAL

PROJECT No. :1-30-55
6/20/2022 1:34:20 PM

DRAWN BY: CHECKED BY:

ISSUE No.	DATE	DESCRIPTION	REVISION No.	DATE	DESCRIPTION
ISSUE No.	DATE	DESCRIPTION	REVISION No.	DATE	DESCRIPTION
ISSUE No.	DATE	DESCRIPTION	REVISION No.	DATE	DESCRIPTION
ISSUE No.	DATE	DESCRIPTION	REVISION No.	DATE	DESCRIPTION

RUHNAUCLARKE.COM
3775 TENTH STREET, RIVERSIDE CALIFORNIA 92501 (951) 684 4664 / 5751 PALMER WAY, SUITE C, CARLSBAD CALIFORNIA 92010 (760) 438 5899

GHS KITCHEN & WEIGHTROOM
GROSSMONT HIGH SCHOOL
1100 MURRAY DR, EL CAJON, CA 92020
GROSSMONT UNION HIGH SCHOOL

MECHANICAL DETAILS **M0-5.2**

1-30-55

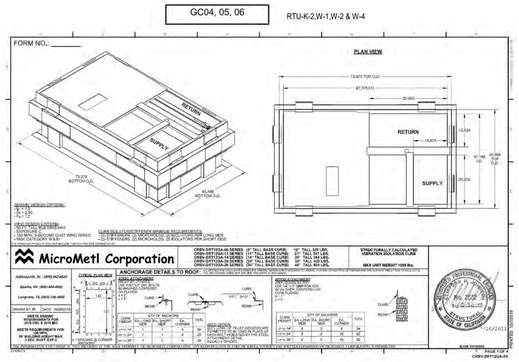

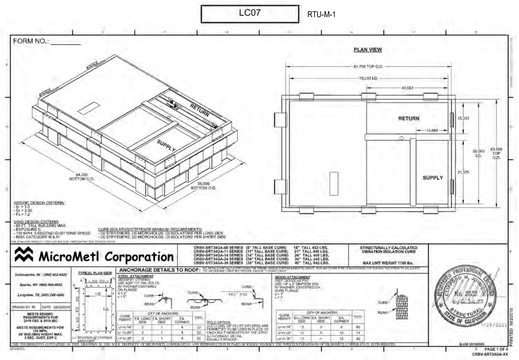

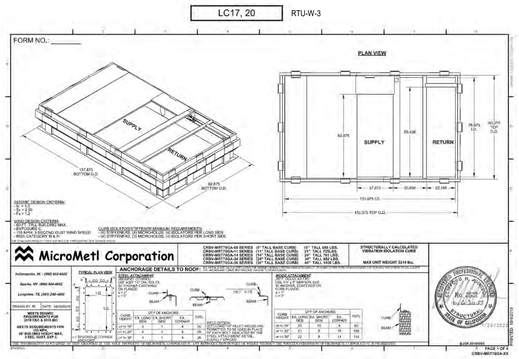

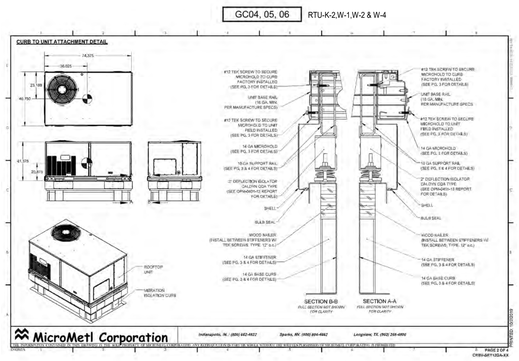

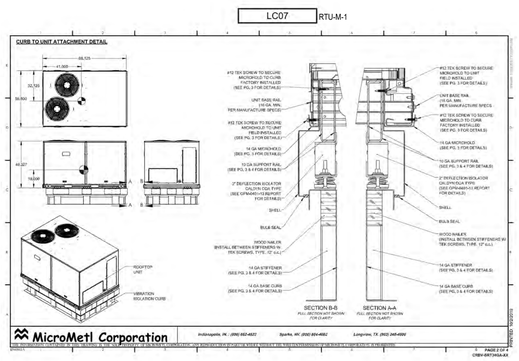

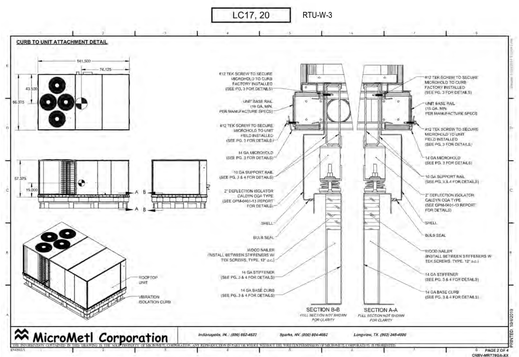

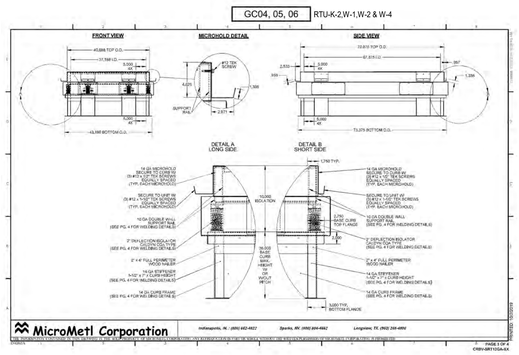

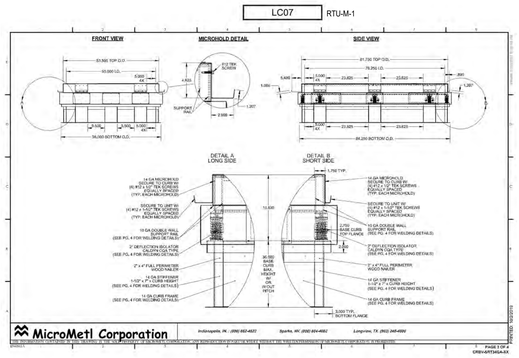

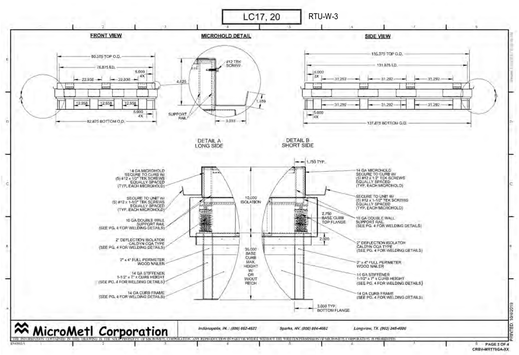

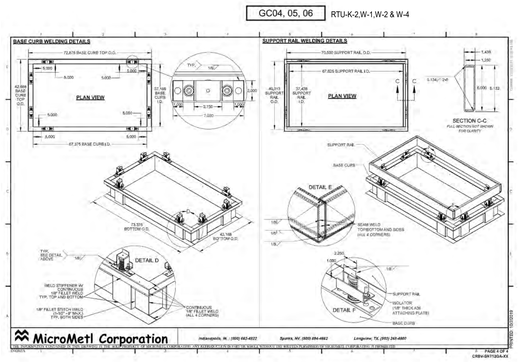

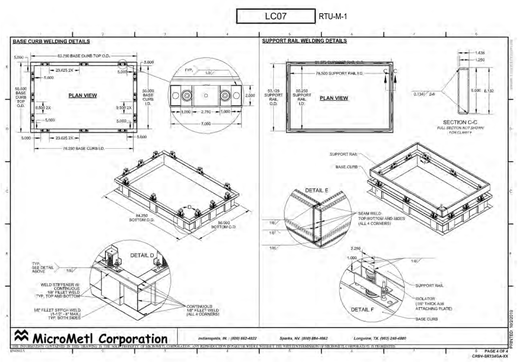

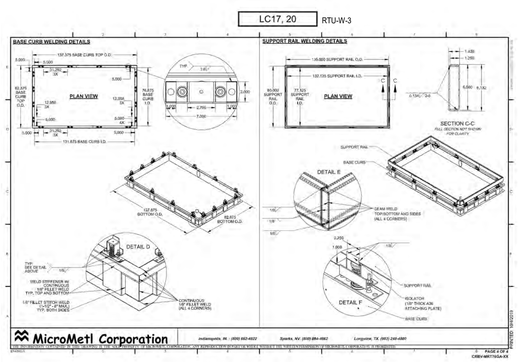

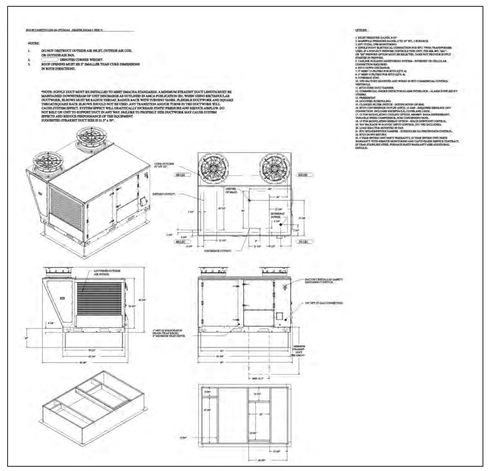

1 RTU-K-2,W-1,W-2 & W-4 MECHANICAL ROOF CURB
NO SCALE

2 RTU-M-1 MECHANICAL ROOF CURB
NO SCALE

3 RTU-W-3 MECHANICAL ROOF CURB
NO SCALE

4 RTU K-1 MECHANICAL ROOF CURB
NO SCALE

REGISTERED PROFESSIONAL ENGINEER — JOHN C. CAMPBELL — Reg. M 025911 — Exp. 6-30-23 — MECHANICAL — STATE OF CALIFORNIA

LICENSED ARCHITECT — ROGER CLARKE — No. C-21366 — Exp. 12-31-2023 — STATE OF CALIFORNIA

STAMPS

IDENTIFICATION STAMP
DIV. OF THE STATE ARCHITECT
APP: 04-120895 INC:
REVIEWED FOR
SS ☑ FLS ☑ ACS ☑
DATE: 06/27/2022
ACCESSIBILITY
FOR INSPECTION

CONSULTANT BRANDING

MA ENGINEERS
5160 Carroll Canyon Rd, Suite 200
San Diego, California 92121
Mechanical Engineers
T: 858 205-0030 www.ma-eng.com

RUHNAU CLARKE ARCHITECTS

GHS KITCHEN & WEIGHTROOM: 06/13/2022 DSA SUBMITTAL

PROJECT No. :1-30-55
6/13/2022 10:26:01 AM

DRAWN BY: _____ CHECKED BY: _____

ISSUE No.____ DATE____ DESCRIPTION____
ISSUE No.____ DATE____ DESCRIPTION____
ISSUE No.____ DATE____ DESCRIPTION____
ISSUE No.____ DATE____ DESCRIPTION____

REVISION No.____ DATE____ DESCRIPTION____
REVISION No.____ DATE____ DESCRIPTION____
REVISION No.____ DATE____ DESCRIPTION____
REVISION No.____ DATE____ DESCRIPTION____

RUHNAUCLARKE.COM
3775 TENTH STREET, RIVERSIDE CALIFORNIA 92501 (951) 684 4664 / 5751 PALMER WAY, SUITE C, CARLSBAD CALIFORNIA 92010 (760) 438 5899

GHS KITCHEN & WEIGHTROOM
GROSSMONT HIGH SCHOOL
1100 MURRAY DR, EL CAJON, CA 92020
GROSSMONT UNION HIGH SCHOOL

MECHANICAL DETAILS

M0-5.3

1-30-55

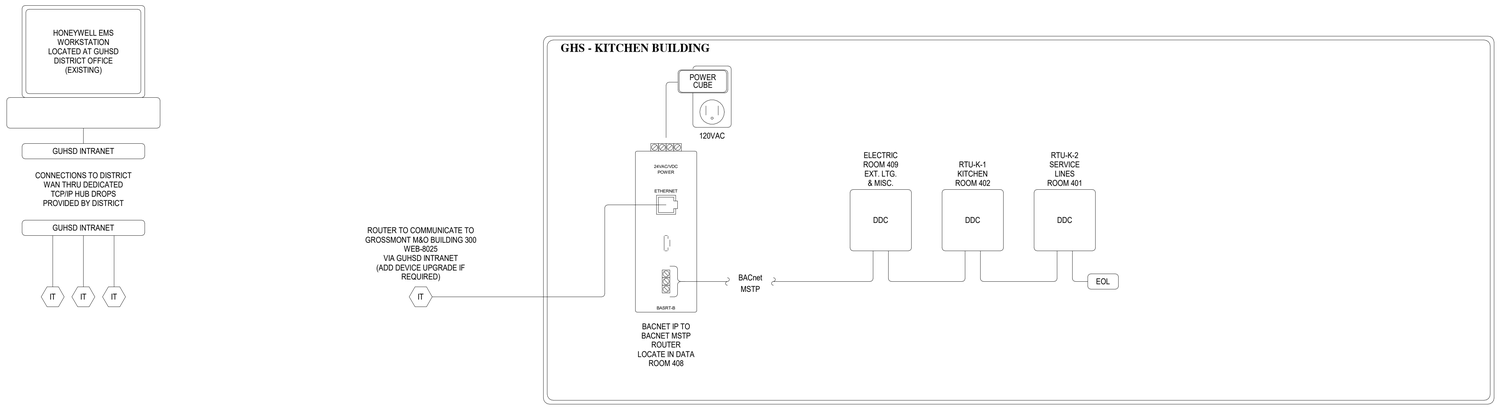

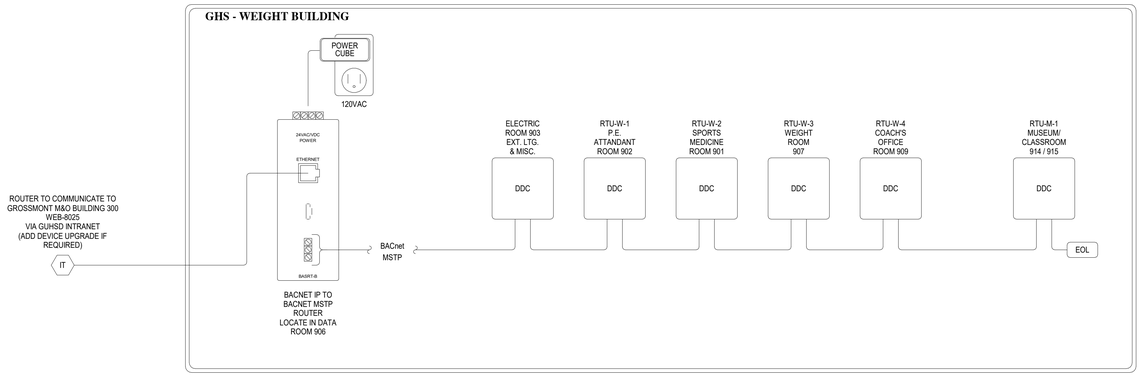

RTU K-1&2, W-1 THRU 4 & M-1 CONTROLS DIAGRAMS | SCALE: NO SCALE | 1

STAMPS

IDENTIFICATION STAMP
DIV. OF THE STATE ARCHITECT
APP: 04-120895 INC:
REVIEWED FOR
SS ☑ FLS ☑ ACS ☑
DATE: 06/27/2022

CONSULTANT BRANDING

MA ENGINEERS
5160 Carroll Canyon Rd, Suite 200
San Diego, California 92121
Construction Management Engineers
T: 858 208-0030 www.ma-eng.com

RUHNAU CLARKE ARCHITECTS

GHS KITCHEN & WEIGHTROOM: 06/13/2022 DSA SUBMITTAL

PROJECT No. :1-30-55
6/13/2022 10:26:02 AM

DRAWN BY: CHECKED BY:

ISSUE No.____ DATE____ DESCRIPTION____ REVISION No.____ DATE____ DESCRIPTION____
ISSUE No.____ DATE____ DESCRIPTION____ REVISION No.____ DATE____ DESCRIPTION____
ISSUE No.____ DATE____ DESCRIPTION____ REVISION No.____ DATE____ DESCRIPTION____
ISSUE No.____ DATE____ DESCRIPTION____ REVISION No.____ DATE____ DESCRIPTION____

RUHNAUCLARKE.COM
3775 TENTH STREET, RIVERSIDE CALIFORNIA 92501 (951) 684 4664 / 5751 PALMER WAY, SUITE C, CARLSBAD CALIFORNIA 92010 (760) 438 5899

GHS KITCHEN & WEIGHTROOM
GROSSMONT HIGH SCHOOL
1100 MURRAY DR, EL CAJON, CA 92020
GROSSMONT UNION HIGH SCHOOL

MECHANICAL CONTROLS

M0-6.1

1-30-55

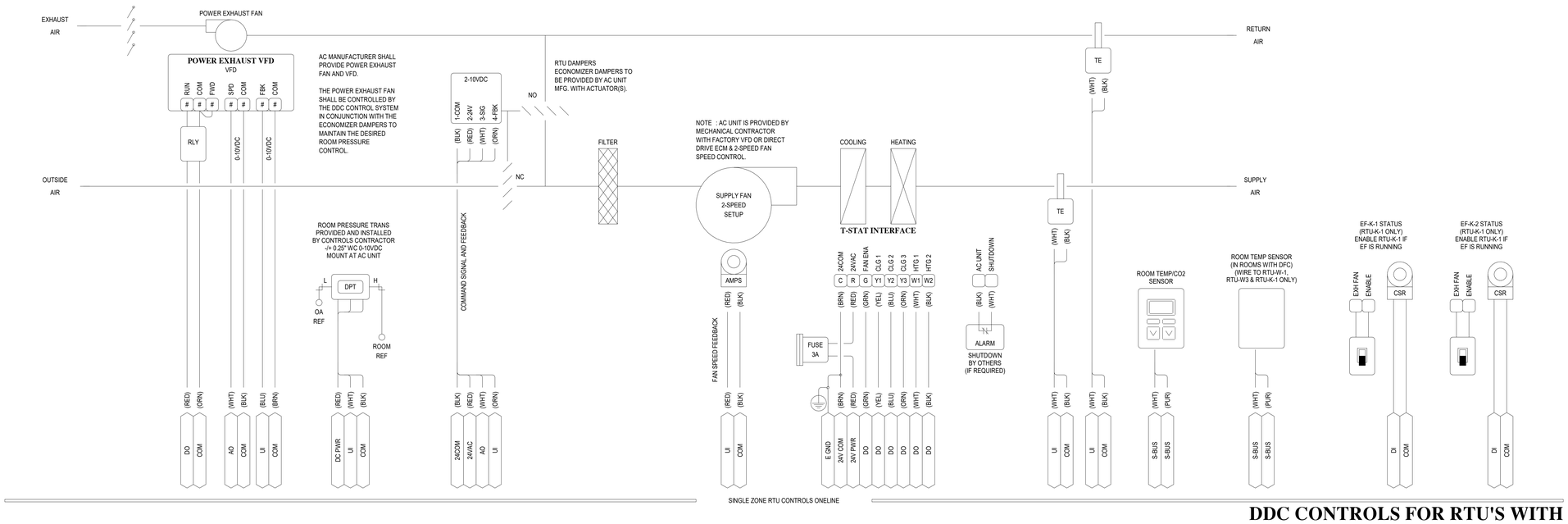

SINGLE ZONE RTU CONTROLS ONELINE

DDC CONTROLS FOR RTU'S WITH DDC ECONOMIZER & POWER EXHAUST

SEQUENCE OF OPERATION:

SINGLE ZONE RTU

THE AC UNIT WILL BE ENABLED BASED ON A TIME-OF-DAY SCHEDULE FROM THE DISTRICT EMS. THE SYSTEM CAN ALSO BE STARTED VIA THE ROOM SENSOR BYPASS BUTTON.
WHEN THE AC IS RUNNING THE DDC CONTROLLER WILL ENABLE THE HEATING AND COOLING STAGES AND ADJUST THE ECONOMIZER DAMPERS BASED ON THE ZONE LOAD VS. SETPOINT. THE AC UNIT WILL CONTROL THE SUPPLY FAN SPEED BASED ON CALL FOR COOLING OR HEATING.

CO2 CONTROL:

WHEN THE ROOM CO2 LEVEL DROPS BELOW AN ADJUSTABLE CO2 SETPOINT THE OUTDOOR DAMPER MINIMUM POSITION WILL BE DECREASED TO BRING IN LESS OUTDOOR AIR (DCV). THE MINIMUM AND MAXIMUM DAMPER POSITIONS FOR BOTH LOW AND HIGH SPEEDS WILL BE ADJUSTABLE FROM THE EMS. DRY BULB ECONOMIZER STRATEGY WILL BE IMPLEMENTED.

ECIP - EPIDEMIC CONDITIONS IN PLACE (OVERRIDES DCV AND ECONOMIZER CONTROL):

TO ACCOMODATE ECID, THE CONTROLLER WILL BE PROGRAMMED WITH ANOTHER DAMPER POSITION TO ALLOW FOR INCREASED OUTDOOR AIR. THIS WILL BE ADJUSTABLE BASED ON THE MECHANICAL AC UNIT'S ABILITY TO HANDLE MORE OUTDOOR AIR AT THE CURRENT TEMPERATURE.

POWER EXHAUST FAN CONTROL

THE RTU WILL BE PROVIDED WITH VARIABLE SPEED POWER EXHAUST FAN AND VFD. THE POWER EXHAUST FAN VFD WILL BE ENABLED BY THE DDC AND THE FAN SPEED CONTROLLED BY THE DDC TO MAINTAIN THE ROOM PRESSURE AT 0.0"WC (ADJUSTABLE) OR SLIGHTLY POSITIVE.

THE EMS WILL MONITOR THE VARIOUS DATA POINTS AS SHOWN ON THIS DRAWING

VERIFY THAT UNITS WITH SMOKE DETECTORS ARE WIRED TO SHUTDOWN THE AC UNIT WHEN SMOKE IS DETECTED.

THE FOLLOWING SOFTWARE FUNCTIONS AND DDC HARDWARE I/O SHALL BE FURNISHED:

- ADVANCED DIGITAL ECONOMIZER CONTROL (ADEC) - FURNISH FULL DDC CONTROL OF THE ECONOMIZER DAMPERS. WHEN THE OUTSIDE AIR IS ACCEPTABLE FOR FREE COOLING THE OUTSIDE AIR DAMPERS WILL BE MODULATED OPEN AS NEEDED. DAMPER POSITION WILL BE TRENDED.
- DEMAND CONTROL VENTILATION (DCV) - FURNISH AND IMPLEMENT AUTOMATIC CONTROL ADJUSTMENTS TO THE OUTSIDE AIR DAMPER TO ACCOMODATE ROOM CO2 CONDITIONS (ON UNITS WHERE CO2 CONTROL IS SPECIFIED).
- DEMAND LIMIT CONTROL (DLC) - FURNISH AND IMPLEMENT ROUTINE(S) TO SHED THE SITE LOAD BY SHIFTING OUT THE CONTROL SETPOINTS WHEN REQUESTED FROM THE EMS.
- FAULT DETECTION & DIAGNOSTICS (FDD) - FURNISH AND IMPLEMENT FAULT DETECTION ROUTINE(S) TO ENSURE THE ECONOMIZERS AND AC UNIT ARE WORKING PROPERLY.

NOTES:

1. MECHANICAL CONTRACTOR IS TO PROVIDE AC UNIT WITH FACTORY INSTALLED VFD OR DIRECT DRIVE ECM SETUP FOR 2-SPEED OPERATION. THE SPEED WILL BE CONTROLLED BY THE AC UNIT CONTROLS.
2. MECHANICAL CONTRACTOR SHALL PROVIDE ECONOMIZER DAMPER SECTION(S) WITH PRE-INSTALLED ACTUATOR(S).
3. MECHANICAL CONTRACTOR SHALL PROVIDE POWER EXHAUST FAN WITH VFD. THE POWER EXHAUST FAN SHALL BE CONTROLLED BY THE DDC CONTROL SYSTEM IN CONJUNCTION WITH THE ECONOMIZER DAMPERS TO MAINTAIN THE DESIRED ROOM PRESSURE CONTROL (ADJUSTABLE SETPOINT FROM THE EMS).

TYPICAL FOR:
AC UNITS WITH ECONOMIZER AND POWER EXHAUST

RTU K-1 | RTU K-2 | RTU M-1

RTU W-1 | RTU W-2 | RTU W-3 | RTU W-4

RTU K-1&2, W-1 THRU 4 & M-1 DDC CONTROLS DIAGRAMS

SCALE: NO SCALE | 1

STAMPS

REGISTERED PROFESSIONAL ENGINEER — RANDY C. CAMPBELL — Reg. M 025911 — EXP. 6-30-23 — MECHANICAL — STATE OF CALIFORNIA

LICENSED ARCHITECT — RUSER CLARKE — No. C-21365 — Exp. 12-31-23 — STATE OF CALIFORNIA

IDENTIFICATION STAMP
DIV. OF THE STATE ARCHITECT
APP: 04-120895 INC:
REVIEWED FOR
SS ☑ FLS ☑ ACS ☑
DATE: 06/27/2022
AGENCY
FOR DSA

CONSULTANT BRANDING

MA ENGINEERS
5160 Carroll Canyon Rd, Suite 200
San Diego, California 92121
Corporate Headquarters
T. 858 205-0030 www.ma-eng.com

RUHNAU CLARKE ARCHITECTS

GHS KITCHEN & WEIGHTROOM: 06/13/2022 DSA SUBMITTAL

PROJECT No. :1-30-55
6/13/2022 10:26:02 AM

DRAWN BY: CHECKED BY:

ISSUE No.____ DATE____ DESCRIPTION____ REVISION No.____ DATE____ DESCRIPTION____
ISSUE No.____ DATE____ DESCRIPTION____ REVISION No.____ DATE____ DESCRIPTION____
ISSUE No.____ DATE____ DESCRIPTION____ REVISION No.____ DATE____ DESCRIPTION____
ISSUE No.____ DATE____ DESCRIPTION____ REVISION No.____ DATE____ DESCRIPTION____

RUHNAUCLARKE.COM
3775 TENTH STREET, RIVERSIDE CALIFORNIA 92501 (951) 684 4664 / 5751 PALMER WAY, SUITE C, CARLSBAD CALIFORNIA 92010 (760) 438 5899

GHS KITCHEN & WEIGHTROOM
GROSSMONT HIGH SCHOOL
1100 MURRAY DR, EL CAJON, CA 92020
GROSSMONT UNION HIGH SCHOOL

MECHANICAL CONTROLS

M0-6.2

1-30-55

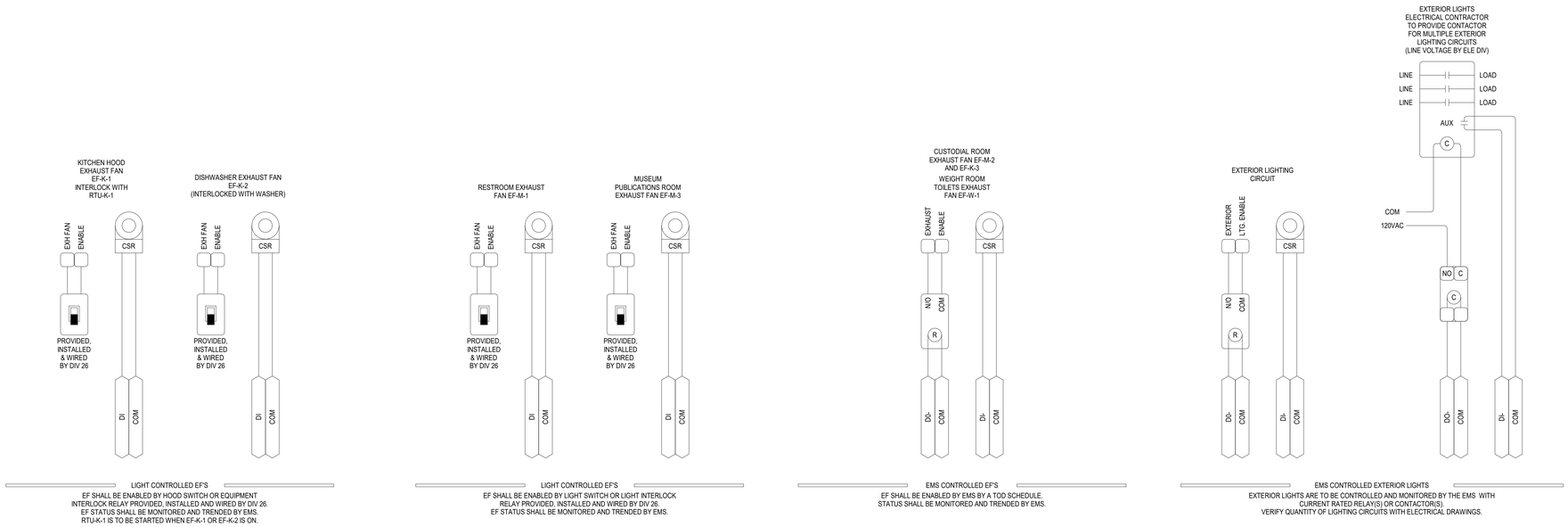

EXHAUST FANS K-1,2&3, M-1&2 AND W-1 CONTROLS DIAGRAMS

SCALE: NO SCALE 1

PROJECT No. :1-30-55
6/13/2022 10:26:02 AM

DRAWN BY: CHECKED BY:

ISSUE No.	DATE	DESCRIPTION	REVISION No.	DATE	DESCRIPTION
ISSUE No.	DATE	DESCRIPTION	REVISION No.	DATE	DESCRIPTION
ISSUE No.	DATE	DESCRIPTION	REVISION No.	DATE	DESCRIPTION
ISSUE No.	DATE	DESCRIPTION	REVISION No.	DATE	DESCRIPTION

RUHNAUCLARKE.COM

3775 TENTH STREET, RIVERSIDE CALIFORNIA 92501 (951) 684 4664 / 5751 PALMER WAY, SUITE C, CARLSBAD CALIFORNIA 92010 (760) 438 5899

GHS KITCHEN & WEIGHTROOM
GROSSMONT HIGH SCHOOL
1100 MURRAY DR, EL CAJON, CA 92020
GROSSMONT UNION HIGH SCHOOL

MECHANICAL CONTROLS

M0-6.3

1-30-55

STAMPS

REGISTERED PROFESSIONAL ENGINEER
ROY C. CAMPBELL
No. M 025911
EXP. 6-30-23
MECHANICAL
STATE OF CALIFORNIA

LICENSED ARCHITECT
ROGER CLARKE
No. C-31360
Exp. 10-30-23
STATE OF CALIFORNIA

IDENTIFICATION STAMP
DIV. OF THE STATE ARCHITECT
APP: 04-120895 INC:
REVIEWED FOR
SS ☑ FLS ☑ ACS ☑
DATE: 06/27/2022

CONSULTANT BRANDING

MA ENGINEERS
5160 Carroll Canyon Rd, Suite 200
San Diego, California 92121
Consulting Mechanical Engineers
T: 858 200-0030 www.ma-engr.com

RUHNAU CLARKE ARCHITECTS

GHS KITCHEN & WEIGHTROOM: 06/13/2022 DSA SUBMITTAL

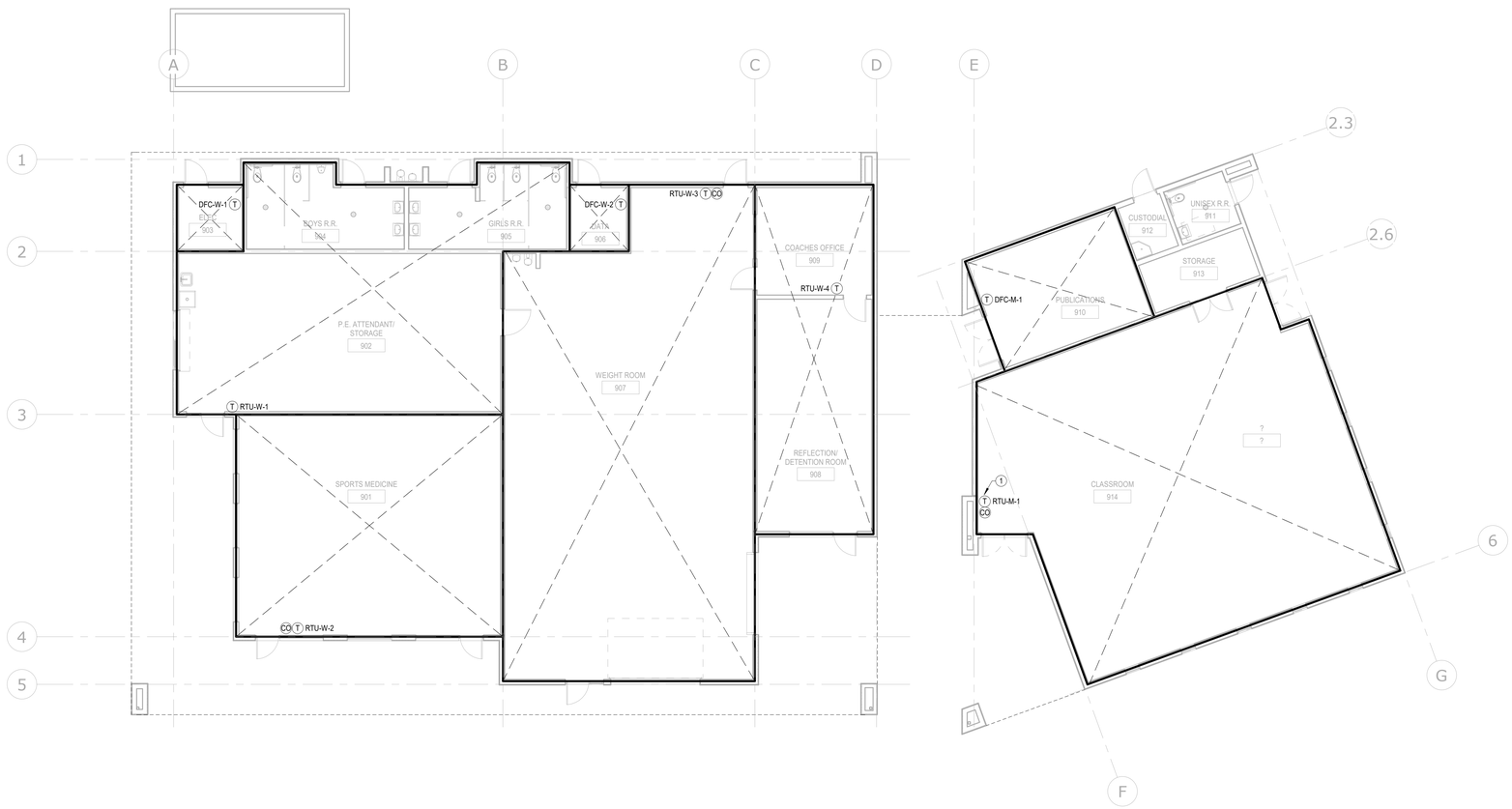

WEIGHT ROOM MODERNIZATION ZONING PLAN

SCALE: 1/8" = 1'-0"

1

STAMPS

REGISTERED PROFESSIONAL ENGINEER
ROY C. CAMPBELL
No. M 025911
EXP. 6-30-23
MECHANICAL
STATE OF CALIFORNIA

LICENSED ARCHITECT
ROGER CLARKE
No. C-21340
Exp. 10-30-24
STATE OF CALIFORNIA

IDENTIFICATION STAMP
DIV. OF THE STATE ARCHITECT
APP: 04-120895 INC:
REVIEWED FOR
SS ☑ FLS ☑ ACS ☑
DATE: 06/27/2022

CONSULTANT BRANDING

MA ENGINEERS
5160 Carroll Canyon Rd, Suite 200
San Diego, California 92121
Consulting Mechanical Engineers
T: 858 200-0030 www.ma-engr.com

RUHNAU CLARKE ARCHITECTS

KEY NOTES:

#	
1	REFER TO DETAIL 1 / M0-0.1 FOR T-STAT INSTALLATION. (TYP). COORDINATE LOCATION WITH ARCHITECT FOR FINAL LOCATION.

GENERAL NOTES:

A. COORDINATE FINAL LOCATION OF T-STATS WITH ARCHITECTURAL AND ELECTRICAL PLANS.

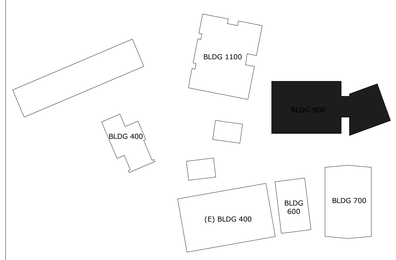

KEY PLAN
NTS

GHS KITCHEN & WEIGHTROOM: 06/13/2022 DSA SUBMITTAL

PROJECT No. :1-30-55
6/13/2022 10:26:03 AM

DRAWN BY: CHECKED BY:

ISSUE No.	DATE	DESCRIPTION	REVISION No.	DATE	DESCRIPTION
ISSUE No.	DATE	DESCRIPTION	REVISION No.	DATE	DESCRIPTION
ISSUE No.	DATE	DESCRIPTION	REVISION No.	DATE	DESCRIPTION
ISSUE No.	DATE	DESCRIPTION	REVISION No.	DATE	DESCRIPTION

RUHNAUCLARKE.COM
3775 TENTH STREET, RIVERSIDE CALIFORNIA 92501 (951) 684 4664 / 5751 PALMER WAY, SUITE C, CARLSBAD CALIFORNIA 92010 (760) 438 5899

GHS KITCHEN & WEIGHTROOM
GROSSMONT HIGH SCHOOL
1100 MURRAY DR, EL CAJON, CA 92020
GROSSMONT UNION HIGH SCHOOL

MECHANICAL WEIGHT ROOM ZONING FLOOR PLAN

M1-1.1

1-30-55

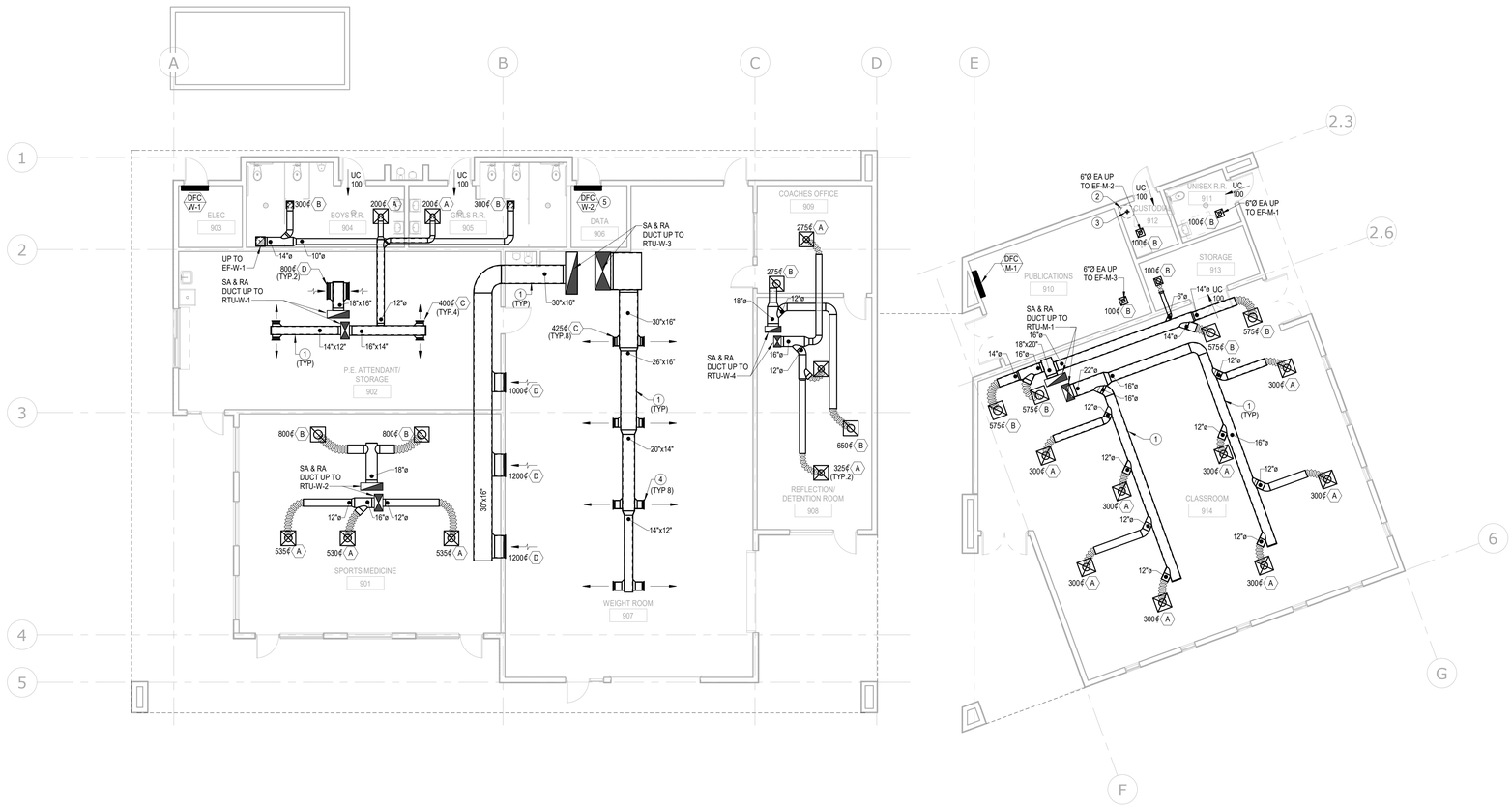

WEIGHT ROOM MODERNIZATION PLAN SCALE: 1/8" = 1'-0" 1

STAMPS

REGISTERED PROFESSIONAL ENGINEER
ROY C. CAMPBELL
No. M 025911
EXP. 6-30-23
MECHANICAL
STATE OF CALIFORNIA

LICENSED ARCHITECT
ROGER CLARKE
No. C-21386
Exp. 10-30-23
STATE OF CALIFORNIA

IDENTIFICATION STAMP
DIV. OF THE STATE ARCHITECT
APP: 04-120895 INC:
REVIEWED FOR
SS ☑ FLS ☑ ACS ☑
DATE: 06/27/2022

CONSULTANT BRANDING

MA ENGINEERS
5160 Carroll Canyon Rd, Suite 200
San Diego, California 92121
Consulting Mechanical Engineers
T. 858 200-0030 www.ma-engr.com

RUHNAU CLARKE ARCHITECTS

KEY NOTES:

1 1" LINED DUCTWORK PER SPECIFICATION SECTION 23 31 13. TYPICAL SUPPLY AND RETURN AIR DUCTWORK.
2 WATER HEATER PER PLUMBING DRAWINGS.SHOWN FOR REFERENCE ONLY.
3 PROVIDE 4"Ø TYPE B FLUE THROUGH ROOF TO WATER HEATER.
4 ROTATE SUPPLY REGISTERS AT 45°(DOWN).
5 REFER TO DETAIL 5/M0-5.1 (TYP).

GENERAL NOTES:

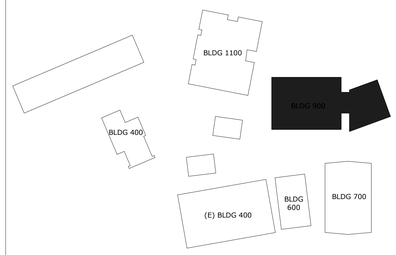

KEY PLAN NTS

GHS KITCHEN & WEIGHTROOM: 06/13/2022 DSA SUBMITTAL

PROJECT No. :1-30-55
6/13/2022 1:15:21 PM

DRAWN BY: CHECKED BY:
ISSUE No. DATE DESCRIPTION
ISSUE No. DATE DESCRIPTION
ISSUE No. DATE DESCRIPTION
ISSUE No. DATE DESCRIPTION
REVISION No. DATE DESCRIPTION
REVISION No. DATE DESCRIPTION
REVISION No. DATE DESCRIPTION
REVISION No. DATE DESCRIPTION

RUHNAUCLARKE.COM
3775 TENTH STREET, RIVERSIDE CALIFORNIA 92501 (951) 684 4664 / 5751 PALMER WAY, SUITE C, CARLSBAD CALIFORNIA 92010 (760) 438 5899

GHS KITCHEN & WEIGHTROOM
GROSSMONT HIGH SCHOOL
1100 MURRAY DR, EL CAJON, CA 92020
GROSSMONT UNION HIGH SCHOOL

MECHANICAL WEIGHT ROOM FLOOR PLAN

M1-2.1

1-30-55

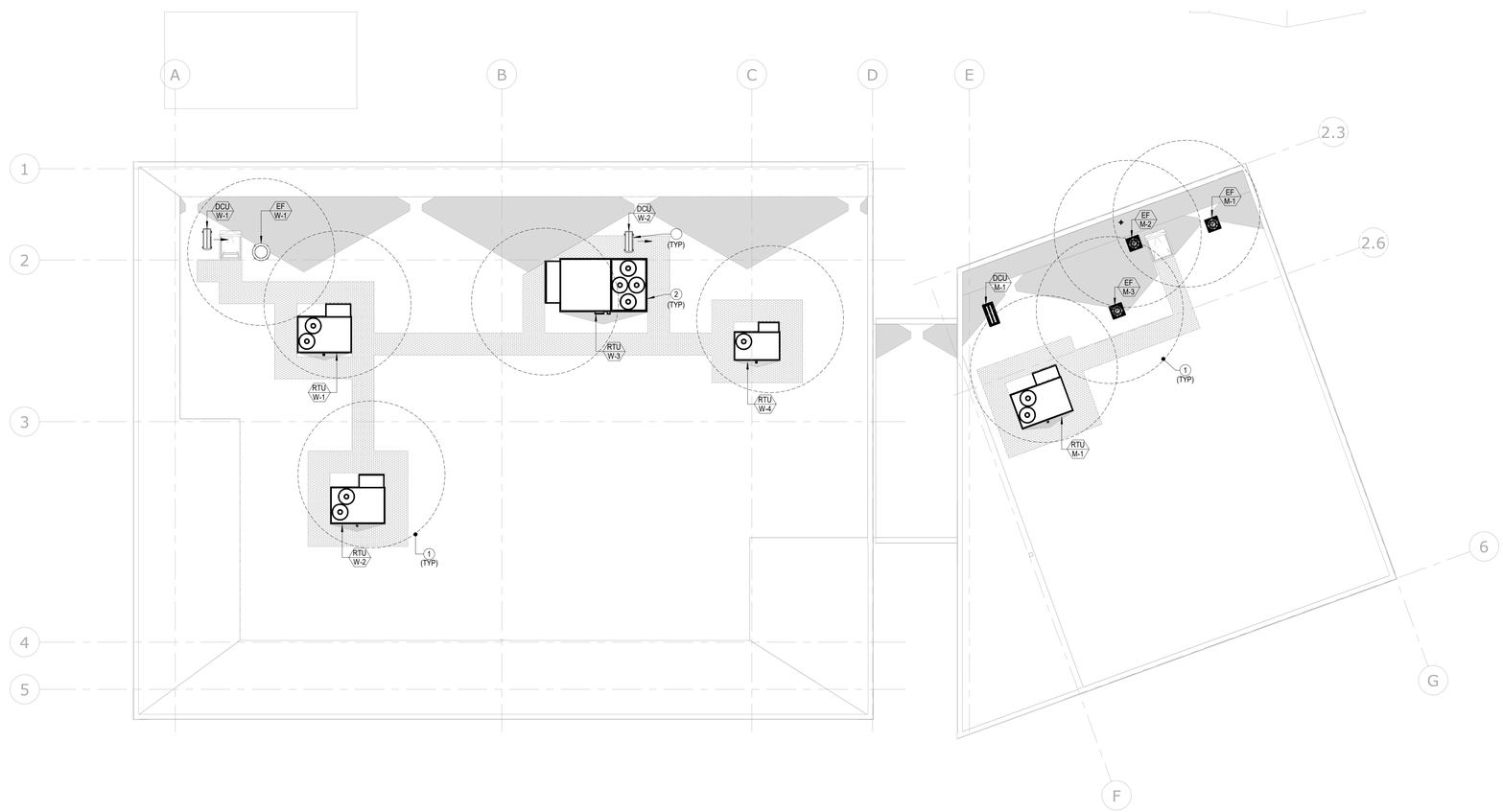

WEIGHT ROOM ROOF PLAN

SCALE: 1/8" = 1'-0"
REF.: /

1

STAMPS

REGISTERED PROFESSIONAL ENGINEER
ROY C. CAMPBELL
No. M 025911
EXP. 6-30-23
MECHANICAL
STATE OF CALIFORNIA

LICENSED ARCHITECT
ROGER CLARKE
No. C-21340
Exp. 10-31-24
STATE OF CALIFORNIA

IDENTIFICATION STAMP
DIV. OF THE STATE ARCHITECT
APP: 04-120895 INC:
REVIEWED FOR
SS ☑ FLS ☑ ACS ☑
DATE: 06/27/2022

CONSULTANT BRANDING

MA ENGINEERS
5160 Carroll Canyon Rd, Suite 200
San Diego, California 92121
Consulting Mechanical Engineers
T. 858 200-0030 www.ma-engr.com

RUHNAU CLARKE ARCHITECTS

KEY NOTES:

1 MAINTAIN 10FT RADIUS FROM EXHAUST AND OUTSIDE AIR INTAKE.
2 PROVIDE ROOF CURBS TO ACCOMODATE SLOPED ROOF SO RTU'S AND CU'S ARE LEVEL.

GENERAL NOTES:

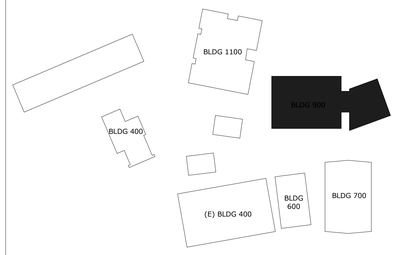

KEY PLAN
NTS

GHS KITCHEN & WEIGHTROOM: 06/13/2022 DSA SUBMITTAL

PROJECT No. :1-30-55
6/13/2022 10:26:07 AM

DRAWN BY: CHECKED BY:

ISSUE No.	DATE	DESCRIPTION	REVISION No.	DATE	DESCRIPTION
ISSUE No.	DATE	DESCRIPTION	REVISION No.	DATE	DESCRIPTION
ISSUE No.	DATE	DESCRIPTION	REVISION No.	DATE	DESCRIPTION
ISSUE No.	DATE	DESCRIPTION	REVISION No.	DATE	DESCRIPTION

RUHNAUCLARKE.COM
3775 TENTH STREET, RIVERSIDE CALIFORNIA 92501 (951) 684 4664 / 5751 PALMER WAY, SUITE C, CARLSBAD CALIFORNIA 92010 (760) 438 5899

GHS KITCHEN & WEIGHTROOM
GROSSMONT HIGH SCHOOL
1100 MURRAY DR, EL CAJON, CA 92020
GROSSMONT UNION HIGH SCHOOL

MECHANICAL WEIGHT ROOM ROOF PLAN

M1-2.2

1-30-55

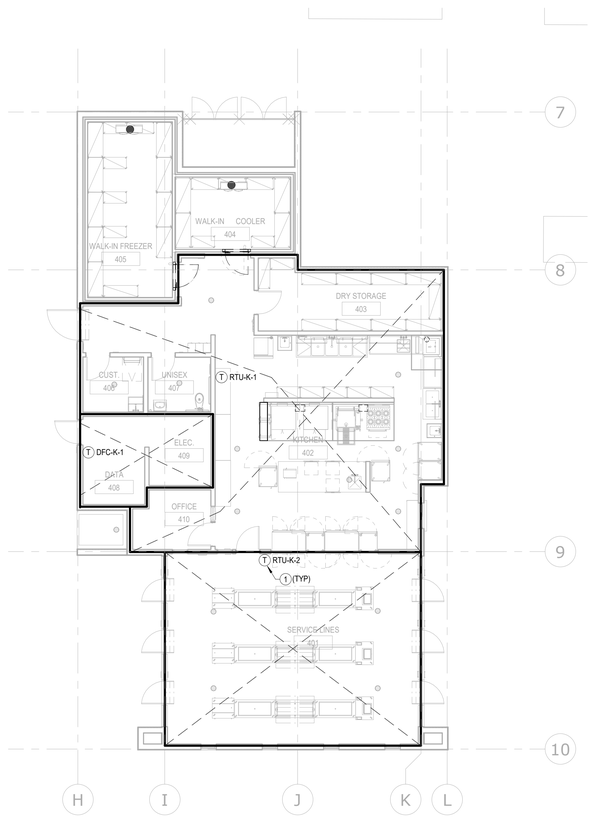

KITCHEN ZONING FLOOR PLAN

SCALE: 1/8" = 1'-0"

1

STAMPS

REGISTERED PROFESSIONAL ENGINEER
TROY C. CAMPBELL
No. M 025911
EXP. 6-30-23
MECHANICAL
STATE OF CALIFORNIA

LICENSED ARCHITECT
ROGER CLARKE
No. C-21365
Exp. 12-31-2023
STATE OF CALIFORNIA

IDENTIFICATION STAMP
DIV. OF THE STATE ARCHITECT
APP: 04-120895 INC:
REVIEWED FOR
SS ☑ FLS ☑ ACS ☑
DATE: 06/27/2022

CONSULTANT BRANDING

MA ENGINEERS
5160 Carroll Canyon Rd, Suite 200
San Diego, California 92121
Cross-disciplinary Engineers
T: 858 208-0030 www.ma-eng.com

RUHNAU CLARKE ARCHITECTS

KEY NOTES:

1 REFER TO DETAIL 1 / M0-0.1 FOR T-STAT INSTALLATION. (TYP). COORDINATE LOCATION WITH ARCHITECT FOR FINAL LOCATION.

GENERAL NOTES:

A. COORDINATE FINAL LOCATION OF T-STATS WITH ARCHITECTURAL AND ELECTRICAL PLANS.

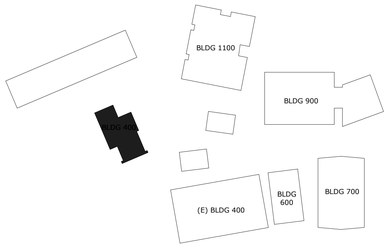

KEY PLAN
NTS

GHS KITCHEN & WEIGHTROOM: 06/13/2022 DSA SUBMITTAL

PROJECT No. :1-30-55
6/13/2022 10:26:08 AM

DRAWN BY: CHECKED BY:

ISSUE No.	DATE	DESCRIPTION	REVISION No.	DATE	DESCRIPTION
ISSUE No.	DATE	DESCRIPTION	REVISION No.	DATE	DESCRIPTION
ISSUE No.	DATE	DESCRIPTION	REVISION No.	DATE	DESCRIPTION
ISSUE No.	DATE	DESCRIPTION	REVISION No.	DATE	DESCRIPTION

RUHNAUCLARKE.COM
3775 TENTH STREET, RIVERSIDE CALIFORNIA 92501 (951) 684 4664 / 5751 PALMER WAY, SUITE C, CARLSBAD CALIFORNIA 92010 (760) 438 5899

GHS KITCHEN & WEIGHTROOM
GROSSMONT HIGH SCHOOL
1100 MURRAY DR, EL CAJON, CA 92020
GROSSMONT UNION HIGH SCHOOL

MECHANICAL KITCHEN ZONING FLOOR PLAN

M2-1.1

1-30-55

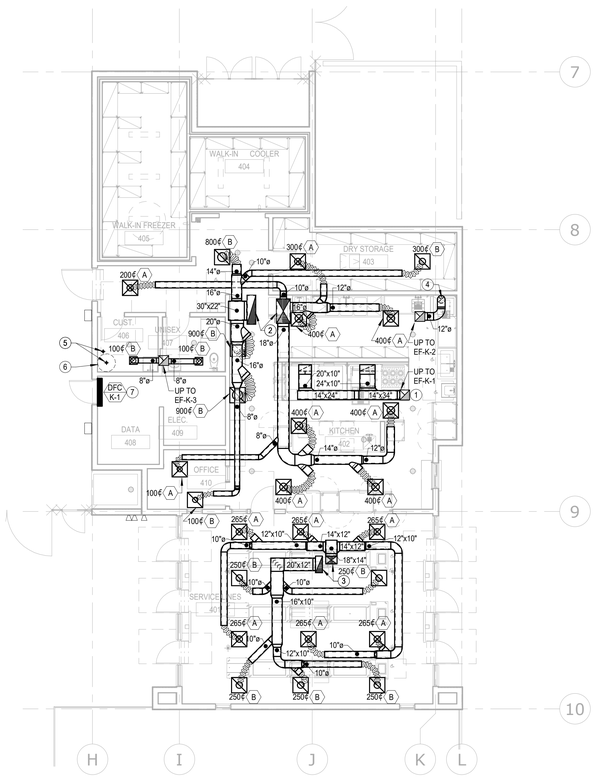

KITCHEN FLOOR PLAN SCALE: 1/8" = 1'-0" 1

STAMPS

REGISTERED PROFESSIONAL ENGINEER
ROY C. CAMPBELL
No. M 025911
EXP. 6-30-23
MECHANICAL
STATE OF CALIFORNIA

LICENSED ARCHITECT
ROGER CLARKE
No. C-31380
Exp. 10-30-23
STATE OF CALIFORNIA

IDENTIFICATION STAMP
DIV. OF THE STATE ARCHITECT
APP: 04-120895 INC:
REVIEWED FOR
SS ☑ FLS ☑ ACS ☑
DATE: 06/27/2022

CONSULTANT BRANDING

MA ENGINEERS
5160 Carroll Canyon Rd, Suite 200
San Diego, California 92121
Consulting Mechanical Engineers
T. 858 200-0030 www.ma-engr.com

RUHNAU CLARKE ARCHITECTS

KEY NOTES:

1 KITCHEN EXHAUST DUCTWORK SHALL BE WELDED BLACK IRON SHEETMETAL. REFER TO DETAIL 1/M0-5.2
2 SA AND RA DUCT UP TO RTU-K-1
3 SA AND RA DUCT UP TO RTU-K-2
4 8"Ø EXHAUST CONNECTION TO DISHWASHER. REFER TO KITCHEN EQUIPMENT DRAWINGS FOR ADDITIONAL INFORMATION.(500 CFM)
5 (2) 3"Ø PVC FLUES FOR CONDENSING WATER HEATER. COORDINATE CONNECTION TO WATER HEATER WITH PLUMBING.
6 WATER HEATER PER PLUMBING DRAWINGS.SHOWN FOR REFERENCE ONLY.
7 REFER TO DETAIL 5/M0-5.1 (TYP).

GENERAL NOTES:

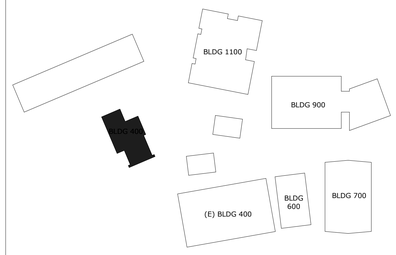

KEY PLAN NTS

GHS KITCHEN & WEIGHTROOM: 06/13/2022 DSA SUBMITTAL

PROJECT No. :1-30-55
6/13/2022 3:25:44 PM

DRAWN BY: CHECKED BY:

ISSUE No.	DATE	DESCRIPTION	REVISION No.	DATE	DESCRIPTION
ISSUE No.	DATE	DESCRIPTION	REVISION No.	DATE	DESCRIPTION
ISSUE No.	DATE	DESCRIPTION	REVISION No.	DATE	DESCRIPTION
ISSUE No.	DATE	DESCRIPTION	REVISION No.	DATE	DESCRIPTION

RUHNAUCLARKE.COM
3775 TENTH STREET, RIVERSIDE CALIFORNIA 92501 (951) 684 4664 / 5751 PALMER WAY, SUITE C, CARLSBAD CALIFORNIA 92010 (760) 438 5899

GHS KITCHEN & WEIGHTROOM
GROSSMONT HIGH SCHOOL
1100 MURRAY DR, EL CAJON, CA 92020
GROSSMONT UNION HIGH SCHOOL

MECHANICAL KITCHEN FLOOR PLAN

M2-2.1

1-30-55

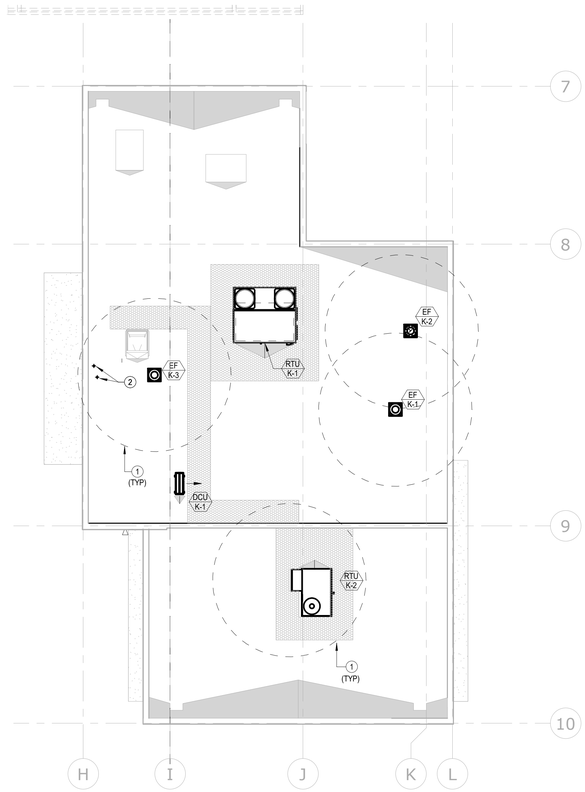

KITCHEN ROOF PLAN | SCALE: 1/8" = 1'-0" | 1

STAMPS

IDENTIFICATION STAMP
DIV. OF THE STATE ARCHITECT
APP: 04-120895 INC:
REVIEWED FOR
SS ☑ FLS ☑ ACS ☑
DATE: 06/27/2022

CONSULTANT BRANDING

MA ENGINEERS
5160 Carroll Canyon Rd, Suite 200
San Diego, California 92121
Cross Mechanical Engineers
T: 858 208-0030 www.ma-eng.com

RUHNAU CLARKE ARCHITECTS

KEY NOTES:

1 MAINTAIN 10FT RADIUS FROM EXHAUST AND OUTSIDE AIR INTAKE.
2 (2) 3"Ø PVC FLUES FOR CONDENSING WATER HEATER. FLUES SHALL TERMINATE 3FT ABOVE ROOF.

GENERAL NOTES:

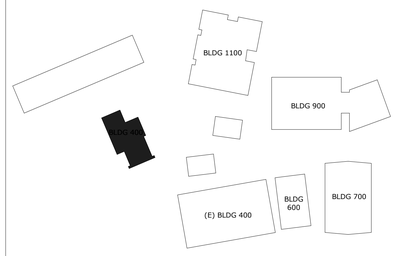

KEY PLAN NTS

GHS KITCHEN & WEIGHTROOM: 06/13/2022 DSA SUBMITTAL

PROJECT No. :1-30-55
6/13/2022 1:15:21 PM

DRAWN BY: CHECKED BY:

ISSUE No.____	DATE____	DESCRIPTION____	REVISION No.____	DATE____	DESCRIPTION____
ISSUE No.____	DATE____	DESCRIPTION____	REVISION No.____	DATE____	DESCRIPTION____
ISSUE No.____	DATE____	DESCRIPTION____	REVISION No.____	DATE____	DESCRIPTION____
ISSUE No.____	DATE____	DESCRIPTION____	REVISION No.____	DATE____	DESCRIPTION____

RUHNAUCLARKE.COM
3775 TENTH STREET, RIVERSIDE CALIFORNIA 92501 (951) 684 4664 / 5751 PALMER WAY, SUITE C, CARLSBAD CALIFORNIA 92010 (760) 438 5899

GHS KITCHEN & WEIGHTROOM
GROSSMONT HIGH SCHOOL
1100 MURRAY DR, EL CAJON, CA 92020
GROSSMONT UNION HIGH SCHOOL

MECHANICAL KITCHEN ROOF PLAN

M2-2.2

1-30-55

WATER CALCULATION

PRESSURE AVAILABLE

STATIC PRESSURE IN MAIN	=	+68	PSI
ESTIMATED PRESSURE LOSS THRU METER	=	-3	PSI
ESTIMATED PRESSURE LOSS THRU BACKFLOW	=	-15	PSI
MINIMUM PRESSURE REQUIRED AT LAST FIXTURE	=	-30	PSI
STATIC HEAD LOSS (23 FEET x .43)	=	-9.89	PSI
TOTAL	=	10.11	PSI
TOTAL DEVELOPED LENGTH (TDL)	=	200	FEET
TOTAL EQUIVALENT LENGTH (TDLx1.5)	=	300	FEET

(10.11X100) / 300 = 3.37 PSI ALLOWABLE LOSS PER 100 FT

PIPE SIZING CHART BASED ON 3 PSI/100FT LOSS.

PLUMBING LEGEND AND ABBREVIATIONS

SYMBOL	ABBREV.	DESCRIPTION	SYMBOL	ABBREV.	DESCRIPTION
	POC	POINT OF CONNECTION		ABV	ABOVE
	W	WASTE OR SEWER BELOW SLAB		A/C	ABOVE CEILING
GW	GW	GREASE WASTE		ADA	AMERICANS WITH DISABILITIES ACT
	V	SANITARY VENT		A.F.F.	ABOVE FINISH FLOOR
	CW	COLD WATER		A.F.G.	ABOVE FINISH GRADE
	HW	HOT WATER		A/G	ABOVE GRADE
G	G	LOW PRESSURE NATURAL GAS (7" W.C.)		A.P.	ACCESS PANEL
MPG	MPG	MEDIUM PRESSURE NATURAL GAS (5 PSI)		B/F	BELOW FLOOR
RD	RD	ROOF DRAIN		B/G	BELOW GRADE
ORD	ORD	OVERFLOW ROOF DRAIN		CFH	CUBIC FEET PER HOUR
CD	CD	CONDENSATE DRAIN		DWGS.	DRAWINGS
OCD	OCD	OVERFLOW CONDENSATE DRAIN		EA.	EACH
SD	SD	STORM DRAIN		EXIST.	EXISTING
	SOV	SHUT OFF VALVE		(E)	EXISTING
	PRV	PRESSURE REDUCING VALVE		FT.	FEET OR FOOT
	FS	FLOOR SINK		FLR.	FLOOR
	FD	FLOOR DRAIN		G.P.F.	GALLONS PER FLUSH
	FCO	FLOOR CLEAN-OUT		I.E.	INVERT ELEVATION
	WCO	WALL CLEAN-OUT		LBS	POUNDS
	GCO	GRADE CLEAN-OUT		MSA	MEDIUM PRESSURE GAS METER
	2WGCO	2 WAY GRADE CLEAN-OUT		NTS	NOT TO SCALE
	DN	DOWN OR DROP		ORD	OVERFLOW ROOF DRAIN
	UP	RISE OR RISER		O/H	OVERHEAD
	HB	HOSE BIBB		LB	POUNDS
		VALVE ON RISE OR DROP		PSI	POUNDS PER SQUARE INCH
	U	UNION		RD	ROOF DRAIN
	RV	TEMPERATURE & PRESSURE RELIEF VALVE		SF	SQUARE FEET
				SIM.	SIMILAR
				T.D.H.	TOTAL DEVELOPED HEAD
				U/G	UNDERGROUND
				V.T.R.	VENT THROUGH ROOF
				W.C.	WATER COLUMN

GENERAL NOTES

1. THESE DRAWINGS ARE A GENERAL GRAPHIC PRESENTATION OF THE WORK. PIPING AND EQUIPMENT, AS SHOWN, ARE SCHEMATIC. FABRICATE AND INSTALL BASED ON ACTUAL FIELD MEASUREMENT. COORDINATE WITH OTHER TRADES. PROVIDE A COMPLETE SET OF SHOP DRAWINGS REFLECTING ACTUAL INSTALL, ACCESS REQUIREMENTS, AND DETAILS BASED UPON THE ACTUAL EQUIPMENT PROCURED. MAINTAIN AN UP TO DATE SET OF AS-BUILT DRAWINGS AT THE JOB SITE.
2. THESE DRAWINGS ARE TO BE CONSIDERED NOT FOR CONSTRUCTION UNTIL THEY ARE STAMPED, SIGNED, AND PERMITTED. UNTIL THEN THEY ARE SUBJECT TO CHANGE WITHOUT NOTICE.
3. COMPLY WITH CALIFORNIA MECHANICAL CODE (CMC), CALIFORNIA PLUMBING CODE (CPC), AND NATIONAL FIRE PROTECTION AGENCY (NFPA), AND GOVERNING CODES. THERE SHALL BE NO EXCEPTION. REPORT DEFICIENCIES WITHIN THIRTY (30) DAYS UPON AUTHORIZATION TO PROCEED.
4. PROVIDE ACCESS AND CLEARANCE FOR MAINTENANCE FOR MECHANICAL & PLUMBING EQUIPMENT AND COMPONENTS AS RECOMMENDED BY THE EQUIPMENT MANUFACTURER AND APPLICABLE CODES.
5. HANDLE, STORE AND INSTALL EQUIPMENT PER MANUFACTURERS INSTRUCTIONS.
6. NO PLUMBING SHALL BE INSTALLED UNTIL ALL REQUIRED PLUMBING PLAN CHECK PERMITS AND APPROVALS HAVE BEEN OBTAINED FROM ALL REQUIRED AGENCIES.
7. LAVATORY FAUCETS, SINK FAUCETS (NOT INCLUDING SERVICE SINK FAUCETS OR FAUCETS DESIGNATED AT INSTITUTIONAL) SHALL MEET THE FLOW REQUIREMENTS OUTLINED IN THE APPLIANCE EFFICIENCY STANDARDS.
8. COORDINATE WITH THE ARCHITECTURAL DRAWINGS FOR EXACT LOCATION OF PLUMBING FIXTURES AND DRAINS.
9. HOSE BIBBS SHALL BE PROTECTED BY AN APPROVED NON-REMOVABLE TYPE BACKFLOW PROTECTION DEVICE. HOSE BIBBS SHALL BE MOUNTED AT +18" ABOVE FLOOR UNLESS OTHERWISE NOTED.
10. PROVIDE ALL TAILPIECES, TRAPS, STOPS, SUPPLY PIPES TO LAVATORIES DESIGNED AS ACCESSIBLE, WITH PREFORMED INSULATION JACKET.
11. COORDINATE AND VERIFY SIZES, LOCATIONS, DEPTHS AND PRESSURIZED PIPING PRESSURES OF ALL BUILDING UTILITIES WITH CIVIL.
12. COORDINATE AND SCHEDULE TIMING FOR UTILITY SERVICE CONNECTION.
13. ALL LINES BELOW SLAB ON GRADE TO BE LOCATED AWAY FROM ALL LOAD BEARING FOOTINGS.
14. ALL LINES RUNNING BELOW GRADE BEAMS OR PENETRATING, SEE STRUCTURAL DRAWINGS FOR CONSTRUCTION.
15. ALL VENTS THRU ROOF SHALL BE MINIMUM OF 18 INCHES VERTICAL AND FIFTEEN FEET HORIZONTAL AWAY FROM ALL AIR CONDITIONING FRESH AIR INTAKES AND PROVIDED WITH VANDAL PROOF HOODS.
16. CONTRACTOR SHALL BE RESPONSIBLE FOR ALL CUTTING AND PATCHING OF WALLS, ROOFS, FOOTINGS, FLOORS, INCLUDING ALL SAW CUTTING AND CORE DRILLING. COORDINATE ALL SAW CUTTING AND CORE DRILLING WITH STRUCTURALLY DRAWINGS. ANY CUTTING AND DRILLING REQUIRED OF STRUCTURAL ELEMENTS THAT IS NOT SPECIFICALLY SHOWN ON THE PLANS SHALL BE BROUGHT TO THE ARCHITECTS ATTENTION PRIOR TO CUTTING AND DRILLING. CONTRACTOR SHALL SUBMIT PROPOSED LOCATION AND SIZES OF SUCH CUTTING AND DRILLING FOR THE ARCHITECTS AND STRUCTURAL ENGINEERS APPROVAL.
17. COORDINATE ALL EQUIPMENT LOCATIONS, PIPE PENETRATIONS AND EQUIPMENT PAD LOCATIONS WITH STRUCTURAL DRAWINGS PRIOR TO WORK.
18. COORDINATE INSTALLATION OF ALL EQUIPMENT AND PIPING WITH OTHER TRADES PRIOR TO INSTALLATION. ENSURE THAT ALL CONTROL DEVICES, SHUT-OFF VALVES, ETC. ARE ACCESSIBLE FOR MAINTENANCE. WHERE ACCESS PANELS IN FINISHED SPACES, OTHER THAN THAT SHOWN, CONTRACTOR SHALL PROVIDE AND COORDINATE EXACT LOCATION OF PANELS WITH ARCHITECT PRIOR TO INSTALLATION.
19. INSTALL VALVES WITH UNIONS OR FLANGES AT EACH PIECE OF EQUIPMENT ARRANGED TO ALLOW SERVICE, MAINTENANCE, AND EQUIPMENT REMOVAL WITHOUT SYSTEM SHUT-DOWN.
20. ANY STRUCTURAL FIREPROOFING DAMAGED DURING INSTALLATION OF PLUMBING EQUIPMENT, PIPING, ETC. SHALL BE REPAIRED AT NO COST TO THE OWNER. REPAIRS SHALL BE AS DIRECTED BY THE ARCHITECT.
21. FAUCETS TO BE 1.8 GPM MAXIMUM.
22. WATER HEATER IS TO BE USED ON CALIFORNIA ENERGY COMMISSION (CEC) LIST.
23. PROVIDE EXPANSION TANK OR OTHER APPROVED METHOD OF RELIEVING PRESSURE (SECTION 608.3 CPC).
24. CROSS CONNECTION PROTECTION SHALL BE PROVIDED AT ALL POTABLE WATER SUPPLIED APPLIANCES AND EQUIPMENT.
25. COORDINATE WITH ELECTRICAL AND CONTROL CONTRACTORS FOR ALL POWER REQUIREMENTS PRIOR TO BID.
26. COORDINATE WITH ELECTRICAL AND CONTROL CONTRACTORS FOR ALL POWER REQUIREMENTS PRIOR TO ORDERING ANY EQUIPMENT.
27. UPON INSTALLATION OF ALL EQUIPMENT, DEVICES, VIBRATION ISOLATION, ETC., PROVIDE WRITTEN CONFIRMATION BY EQUIPMENT MANUFACTURER'S REPRESENTATIVES TO ENSURE COMPLIANCE WITH MANUFACTURER'S REQUIREMENTS.
28. PROVIDE DETAILS AND SEISMIC CALCULATIONS FOR ALL EQUIPMENT ON VIBRATION ISOLATION. ALL DETAILS SHALL BE STAMPED BY A STRUCTURAL ENGINEER FROM VIBRATION ISOLATIONS MANUFACTURER.
29. FOR EACH SUBMITTAL, THE CONTRACTOR SHALL PROVIDE A LETTER (ON COMPANY LETTERHEAD) AND SIGNED BY THE PROJECT MANAGER INDICATING THE SUBMITTAL HAS BEEN FULLY IN HOUSE REVIEWED TO ENSURE FULL COMPLIANCE WITH THE CONTRACT DOCUMENTS AND COORDINATION WITH OTHER TRADES. ANY EXCEPTIONS TO THE CONTRACT DOCUMENTS SHALL BE CLEARLY INDICATED ON THIS LETTER. ANY DISCREPANCIES/EXCEPTIONS NOT IDENTIFIED IN WRITING SHALL BE CORRECTED AT THE SOLE EXPENSE OF THE CONTRACTOR AND AT NO EXPENSE TO THE OWNER AND ENGINEER.
30. THE CONTRACTOR SHALL SELECT ALL CIRCUIT SETTERS/BALANCING VALVES FOR ACTUAL FLOW THROUGH THE PIPE AND THE PROPER PRESSURE DROP TO ENSURE PROPER OPERATION AND NOT BASED ON PIPE SIZES.
31. HOT WATER INSULATION SHALL HAVE A MINIMUM WALL THICKNESS OF NOT LESS THAN THE DIAMETER OF THE PIPE FOR A PIPE UP TO 2 INCHES (50 mm) IN DIAMETER. INSULATION WALL THICKNESS SHALL BE NOT LESS THAN 2 INCHES (51 mm) FOR A PIPE OF 2 INCHES (50 mm) OR MORE IN DIAMETER PER CURRENT CPC, SECTION 609.11.2.
32. A CLEANOUT SHALL BE INSTALLED ABOVE THE FIXTURE CONNECTION FITTING, SERVING EACH URINAL, REGARDLESS OF THE LOCATION OF THE URINAL IN THE BUILDING PER CURRENT CPC, SECTION 707.4.

STAMPS

REGISTERED PROFESSIONAL ENGINEER ROY C. CAMPBELL No. M 025911 EXP. 6-30-23 MECHANICAL STATE OF CALIFORNIA

LICENSED ARCHITECT ROGER CLARKE No. C-21340 Exp. 10-31-23 STATE OF CALIFORNIA

IDENTIFICATION STAMP
DIV. OF THE STATE ARCHITECT
APP: 04-120895 INC:
REVIEWED FOR
SS ☑ FLS ☑ ACS ☑
DATE: 06/27/2022

CONSULTANT BRANDING

MA ENGINEERS
5160 Carroll Canyon Rd, Suite 200
San Diego, California 92121
Consulting Mechanical Engineers
T. 858 200-0030 www.ma-engr.com

RUHNAU CLARKE ARCHITECTS

STATE OF CALIFORNIA
WATER HEATING SYSTEM GENERAL INFORMATION
CEC-NRCC-PLB-01-E (Revised 05/15) CALIFORNIA ENERGY COMMISSION

CERTIFICATE OF COMPLIANCE	NRCC-PLB-01-E
Water Heating System General Information	(Page 1 of 2)
Project Name: GHS Kitchen and Weightroom MOD	Date Prepared: 3-1-22

A. GENERAL INFORMATION/SYSTEM INFORMATION

1.	Water Heater System Name:	WH-1
2.	Water Heater System Configuration:	Gas Fired Storage Tank with Recirc Pump
3.	Water Heater System Type:	Gas-fired storage tank
4.	Building Type:	Classroom
5.	Total Number of Water Heaters in Systems:	1
6.	Central DHW Distribution Type:	Recirculation with manual controls
7.	Dwelling Unit DHW Distribution Type:	N/A

B. WATER HEATER INFORMATION
Each water heater type requires a separate form.

1.	Water Heater Type:	Condensing Storage type
2.	Fuel Type	Natural Gas
3.	Manufacture Name	AO Smith
4.	Model Number	BTH-150
5.	Number of Identical Water Heaters:	1
6.	Installed Water Heater System Efficiency:	97%
7.	Required Minimum Efficiency:	80%
8.	Standby loss percent or Standby loss total:	1.8%
9.	Rated Input	150,000 BTUH
810	Pilot Energy:	0%
911	Water Heater Tank Storage Volume:	100 gallons
12	Exterior Insulation On Water Heater:	Foam
13.	Volume of Supplemental Storage:	N/A
14.	Internal Insulation on Supplemental Storage:	N/A
15.	Exterior Insulation on Supplemental Storage:	N/A

CA Building Energy Efficiency Standards - 2013 Nonresidential Compliance May 2015

BASELINE WATER USE CALCULATION TABLE

FIXTURE TYPE	BASELINE FLOW RATE
LAVATORY FAUCETS, NONRESIDENTIAL	0.5 GPM @ 60 PSI
KITCHEN SINK FAUCETS	1.8 GPM @ 60 PSI
FLUSHOMETER VALVE WATER CLOSETS	1.28 GALLONS/FLUSH
URINALS	0.5 OR 0.125³ GALLONS/FLUSH

NOTES:
1. THE DAILY USE NUMBER SHALL BE INCREASED TO THREE IF URINALS ARE NOT INSTALLED IN THE ROOM.
2. FLOOR MOUNTED URINALS @ 0.5 GPF OR WALL-MOUNTED URINALS @ 0.125 GPF.

CW PIPING SIZING CHART 3 psi / 100 ft

SIZE	GPM	FIXTURE UNITS		VELOCITY (FPS)
		FLUSH TANK	FLUSH VALVE	
1/2"	1.8	---	---	2.4
3/4"	4.7	4	---	3.0
1"	9	12	---	3.6
1 1/4"	17	24	---	4.3
1 1/2"	27	46	10	4.9
2"	56	155	63	5.7
2 1/2"	100	380	245	7.2
3"	175	778	739	8
4"	278	1550	1500	8
5"	420	2862	2862	8
6"	675	5155	5155	8

HW PIPING SIZING CHART 3 psi / 100 ft

SIZE	GPM	FIXTURE UNITS		VELOCITY (FPS)
		FLUSH TANK	FLUSH VALVE	
1/2"	1.8	---	---	2.4
3/4"	4.7	4	---	3.0
1"	9	12	---	3.6
1 1/4"	17	24	---	4.3
1 1/2"	27	46	---	4.9
2"	46	111	---	5
2 1/2"	72	236	---	5
3"	113	440	---	5
4"	180	809	---	5
5"	282	1590	---	5

PLAN CHECK NOTES

1. ALL SINKS IN THE FIRST FLOOR OF A BUILDING SHALL BE PROVIDED WITH CLEANOUTS AT THEIR UPPER TERMINAL. ALL URINALS ON THE FIRST FLOOR TO BE PROVIDED WITH CLEANOUTS. CLEANOUT IN HORIZONTAL DRAINAGE PIPING EVERY 100 FEET AND/OR EVERY 135 DEGREE CHANGE OF DIRECTION.
2. DRAINAGE THAT IS UNDER PRESSURE MUST BE INDIRECTLY CONNECTED TO THE DRAINAGE SYSTEM.

PIPE MATERIALS

1. WATER ABOVE GRADE: COPPER TYPE "L" HARD DRAWN WITH WROUGHT COPPER SOLDER JOINT FITTINGS.
2. WATER BELOW GRADE: COPPER TYPE "K" WITH CAST SOLDER JOINT FITTINGS. ROUGH SOLDER JOINT FITTINGS, OR FLARED JOINT FITTINGS.
3. SOIL/WASTE AND VENT ABOVE GRADE: HUBLESS CAST IRON PIPE AND FITTINGS.
4. SOIL/WASTE AND VENT BELOW GRADE: POLYVINYL CHLORIDE (PVC) PIPE AND FITTINGS PER ASTM D2665.
5. STORM DRAIN ABOVE GRADE: HUBLESS CAST IRON PIPE AND FITTINGS.
6. STORM DRAIN BELOW GRADE: POLYVINYL CHLORIDE (PVC) PIPE AND FITTINGS PER ASTM D2665.
7. NATURAL GAS ABOVE GRADE: BLACK STEEL SCHEDULE 40 WITH THREADED/WELDED FITTINGS.
8. NATURAL GAS BELOW GRADE: POLYETHYLENE (PE), SDR 11 PIPE WITH SOCKET FUSION FITTINGS.
9. CONDENSATE DRAIN: COPPER TYPE "M" WITH WROUGHT SOLDER BRAZED JOINT FITTINGS.

SLOPE OF PIPING SYSTEMS

1. SANITARY SEWER, WASTE & VENT PIPING: 2% UNLESS NOTED OTHERWISE.
2. STORM DRAIN PIPING: 1% UNLESS NOTED OTHERWISE.
3. CONDENSATE DRAIN PIPING: 1%.

GHS KITCHEN & WEIGHTROOM: 06/13/2022 DSA SUBMITTAL

PROJECT No. :1-30-55
6/20/2022 7:47:52 AM

DRAWN BY: CHECKED BY:
ISSUE No.____ DATE____ DESCRIPTION____ REVISION No.____ DATE____ DESCRIPTION____
ISSUE No.____ DATE____ DESCRIPTION____ REVISION No.____ DATE____ DESCRIPTION____
ISSUE No.____ DATE____ DESCRIPTION____ REVISION No.____ DATE____ DESCRIPTION____
ISSUE No.____ DATE____ DESCRIPTION____ REVISION No.____ DATE____ DESCRIPTION____

RUHNAUCLARKE.COM
3775 TENTH STREET, RIVERSIDE CALIFORNIA 92501 (951) 684 4664 / 5751 PALMER WAY, SUITE C, CARLSBAD CALIFORNIA 92010 (760) 438 5899

GHS KITCHEN & WEIGHTROOM
GROSSMONT HIGH SCHOOL
1100 MURRAY DR, EL CAJON, CA 92020
GROSSMONT UNION HIGH SCHOOL

PLUMBING GENERAL NOTES, LEGEND

P0-0.1

1-30-55

PLUMBING EQUIPMENT SCHEDULE

SYMBOL	TYPE	ELECTRICAL DATA				CAPACITY		STORAGE VOLUME (GALLON)	WEIGHT (LBS)	DESCRIPTION	LOCATION
		POWER (HP)	VOLTS (V)	PHASE (PH)	HERTZ (HZ)	INPUT (MBH)	OUTPUT (MBH)				
WH 1	WATER HEATER	--	120	1	60	150	--	100	1053	AO SMITH BTH-150(A), 90 DEGREE TEMPERATURE RISE @ 198 GALLONS, 98% THERMAL EFFICIENCY.	KITCHEN
ET 1	EXPANSION TANK	--	--	--	--	--	--	6.6	52	TACO PAX25, 150 PSIG WORKING PRESSURE.	KITCHEN
CP 1	CIRCULATION PUMP	1/12	120	1	60	--	--	--	13	GRUNDFOS UP26-96BF, LEAD FREE, 3 GPM @ 20 FT. T.D.H.	KITCHEN
MX 1	MIXING VALVE	--	--	--	--	--	--	--	--	LEONARD LV-981A-LF, LEAD FREE, THERMOSTATIC, 15 GPM @ MAX 6 PSI PRESSURE DROP. 2.5 GPM MINIMUM FLOW CAPACITY.	KITCHEN
WH 2	WATER HEATER	--	--	--	--	75.1	--	80	685	AO SMITH BL-80, 90 DEGREE TEMPERATURE RISE @ 81 GPH, 81% THERMAL EFFICIENCY.	WEIGHT ROOM
ET 2	EXPANSION TANK	--	--	--	--	--	--	6.6	52	TACO PAX25, 150 PSIG WORKING PRESSURE.	WEIGHT ROOM
CP 2	CIRCULATION PUMP	1/12	120	1	60	--	--	--	13	GRUNDFOS UP26-96BF, LEAD FREE, 3 GPM @ 20 FT. T.D.H.	WEIGHT ROOM
MX 2	MIXING VALVE	--	--	--	--	--	--	--	--	LEONARD TM-26-LF, LEAD-FREE, THERMOSTATIC, 15 GPM @ MAX 20 PSI PRESSURE DROP, 1 GPM MINIMUM FLOW CAPACITY.	WEIGHT ROOM
GI 1	GREASE INTERCEPTOR	--	--	--	--	--	--	1000	--	JENSEN PRECAST JP1000G.	EXTERIOR
SX 1	SAMPLE BOX	--	--	--	--	--	--	--	1400	JENSEN PRECAST JP-200, 24" SAMPLE BOX.	EXTERIOR
CDP 1	CONDENSATE DRAIN PUMP	1/50	--	--	--	--	--	1	1400	LITTLE GIANT VCL-14 SERIES, ABS HOUSING.	VARIOUS

PLUMBING FIXTURE SCHEDULE

SYMBOL	FIXTURE	ROUGH-IN					REMARKS
		HW	CW	W	TRAP	V	
WC 1	WATER CLOSET	--	1"	4"	INTEGRAL	2"	AMERICAN STANDARD, MADERA FLOWISE TOILET #2855.128, FLOOR MOUNTED, ELONGATED BOWL, VITREOUS CHINA, 15" HEIGHT ZURN Z600AV, EXPOSED MANUAL FLUSH VALVE, 1.28 GPF
WC 2	WATER CLOSET - ACCESSIBLE	--	1"	4"	INTEGRAL	2"	AMERICAN STANDARD, MADERA, FLOWISE TOILET #2857.111, FLOOR MOUNTED, ELONGATED BOWL, VITREOUS CHINA, 16-1/2" HEIGHT, ACCESSIBLE. ZURN Z600AV, EXPOSED MANUAL FLUSH VALVE, 1.28 GPF, ACCESSIBLE.
UR 1	URINAL - ACCESSIBLE	--	3/4"	2"	2"	1 1/2"	AMERICAN STANDARD WASHBROOK, WHITE VITREOUS CHINA, ACCESSIBLE. ZURN Z6003 AV EXPOSED MANUAL FLUSH VALVE, 0.5 GPF, ACCESSIBLE.
L 1	LAVATORY	1/2"	1/2"	2"	1 1/2"	1 1/2"	AMERICAN STANDARD LUCERNE 0356.41, WALL HUNG, VITREOUS CHINA. CHICAGO FAUCETS MVP FAUCETS 333-E2805-665PSHAB, MANUAL METERING FAUCET, DECK MOUNTED, SINGLE HOLE SINGLE SUPPLY, 0.5 GPM FLOW.
L 2	LAVATORY ACCESIBLE	1/2"	1/2"	2"	1 1/2"	1 1/2"	AMERICAN STANDARD LUCERN, 0356.41, WALL HUNG, VITREOUS CHINA, ACCESSIBLE. CHICAGO FAUCETS MVP FAUCETS 333-E2805-665PSHAB, MANUAL METERING FAUCET, DECK MOUNTED, SINGLE HOLE SINLE SUPPLY, 0.5 GPM FLOW, ACCESSIBLE.
S 1	SINK - ACCESSIBLE	1/2"	1/2"	2"	1 1/2"	1 1/2"	JUST SL-ADA-1921-A-GR, SINGLE BOWL, 316 STAINLESS STEEL, 19X21X6.5" BOWL, 3 HOLE, CENTER REAR DRAIN, ACCESSIBLE. JUST J-1174-KS, GOOSENECK, 1.5 GPM FLOW, ACCESSIBLE.
S 2	SINK	1/2"	1/2"	2"	1 1/2"	1 1/2"	SWAN MF-F VERITEK, FLOOR MODEL, LAUNDRY TUB, WHITE. CHICAGO FAUCET 891-E2-317CP, MANUAL SINK FAUCET, DECK MOUNTED.
FD 1	FLOOR DRAIN	--	--	3"	3"	1 1/2"	ZURN, Z415B, DURA-COATED CAST IRON BODY, TYPE B POLISHED NICKEL BRONZE LIGHT-DUTY STRAINER.
FS 1	FLOOR SINK	--	--	3"	3"	1 1/2"	ZURN Z1910, 8" X 8" SQUARE RECEPTOR, DEEP CAST IRON BODY, MEDIUM-DUTY GRATE.
MS 1	MOP SINK	--	--	3"	3"	1 1/2"	AMERICAN STANDARD 7741.000, VINYL RIM GUARD, ENAMELED CAST IRON. CHICAGO FAUCETS 897-MPCP, WALL MOUNTED.
HB 1	HOSE BIB (EXTERIOR)	--	3/4"	--	--	--	ZURN Z1341, EXTERNAL VACUUM BREAKER.
HB 2	HOSE BIB (INTERIOR)	--	3/4"	--	--	--	ACORN 8140, STAINLESS STEEL RECESSED HOSE BOX WITH WALL FLANGE.
DF 1	DRINKING FOUNTAIN	--	3/4"	2"	2"	2"	HAWS 1119.14, BOTTLE FILLER MODEL 1920, DUAL WALL MOUNT, 304 STAINLESS STEEL, INDOOR, ACCESSIBLE
DF 2	DRINKING FOUNTAIN	--	3/4"	2"	2"	2"	HAWS 1119.14, BOTTLE FILLER MODEL 1920 DUAL WALL MOUNT, 304 STAINLESS STEEL, OUTDOOR, ACCESSIBLE.
TP 1	TRAP PRIMER	--	1/2"	--	--	--	PPP P1-500, CORROSION RESISTANT BRASS.
RD 1	ROOF DRAIN	--	--	--	--	--	ZURN ZC-100-C-R, CAST IRON DOME, UNDERDECK CLAMP.
ORD 1	OVERFLOW ROOF DRAIN	--	--	--	--	--	ZURN ZC-100-C-R-89, CAST IRON DOME, UNDERDECK CLAMP, 2" HIGH EXTERNAL DAM.
CWB 1	CLOTHES WASHER BOX	--	--	--	--	--	GUY GRAY, OUTLET BOX
DR 1	DRAIN RECEPTOR	--	--	--	--	--	ZURN Z127, 8-1/2" DIAMETER DECK RECEPTOR DRAIN, DURA-COATED CAST IRON BODY.

STAMPS

REGISTERED PROFESSIONAL ENGINEER — JOHN C. CAMPBELL — Reg. M 025911 — EXP. 6-30-23 — MECHANICAL — STATE OF CALIFORNIA

LICENSED ARCHITECT — RUHNAU CLARKE — No. C-21360 — Exp. 12-31-23 — STATE OF CALIFORNIA

IDENTIFICATION STAMP
DIV. OF THE STATE ARCHITECT
APP: 04-120895 INC:
REVIEWED FOR
SS ☑ FLS ☑ ACS ☑
DATE: 06/27/2022
AOR
File No.

CONSULTANT BRANDING

MA ENGINEERS
5160 Carroll Canyon Rd, Suite 200
San Diego, California 92121
Mechanical Electrical Plumbing Engineers
T. 858 205-0030 www.ma-eng.com

RUHNAU CLARKE ARCHITECTS

GHS KITCHEN & WEIGHTROOM: 06/13/2022 DSA SUBMITTAL

PROJECT No. :1-30-55
6/20/2022 7:47:53 AM

DRAWN BY: CHECKED BY:

ISSUE No.____ DATE____ DESCRIPTION____
ISSUE No.____ DATE____ DESCRIPTION____
ISSUE No.____ DATE____ DESCRIPTION____
ISSUE No.____ DATE____ DESCRIPTION____

REVISION No.____ DATE____ DESCRIPTION____
REVISION No.____ DATE____ DESCRIPTION____
REVISION No.____ DATE____ DESCRIPTION____
REVISION No.____ DATE____ DESCRIPTION____

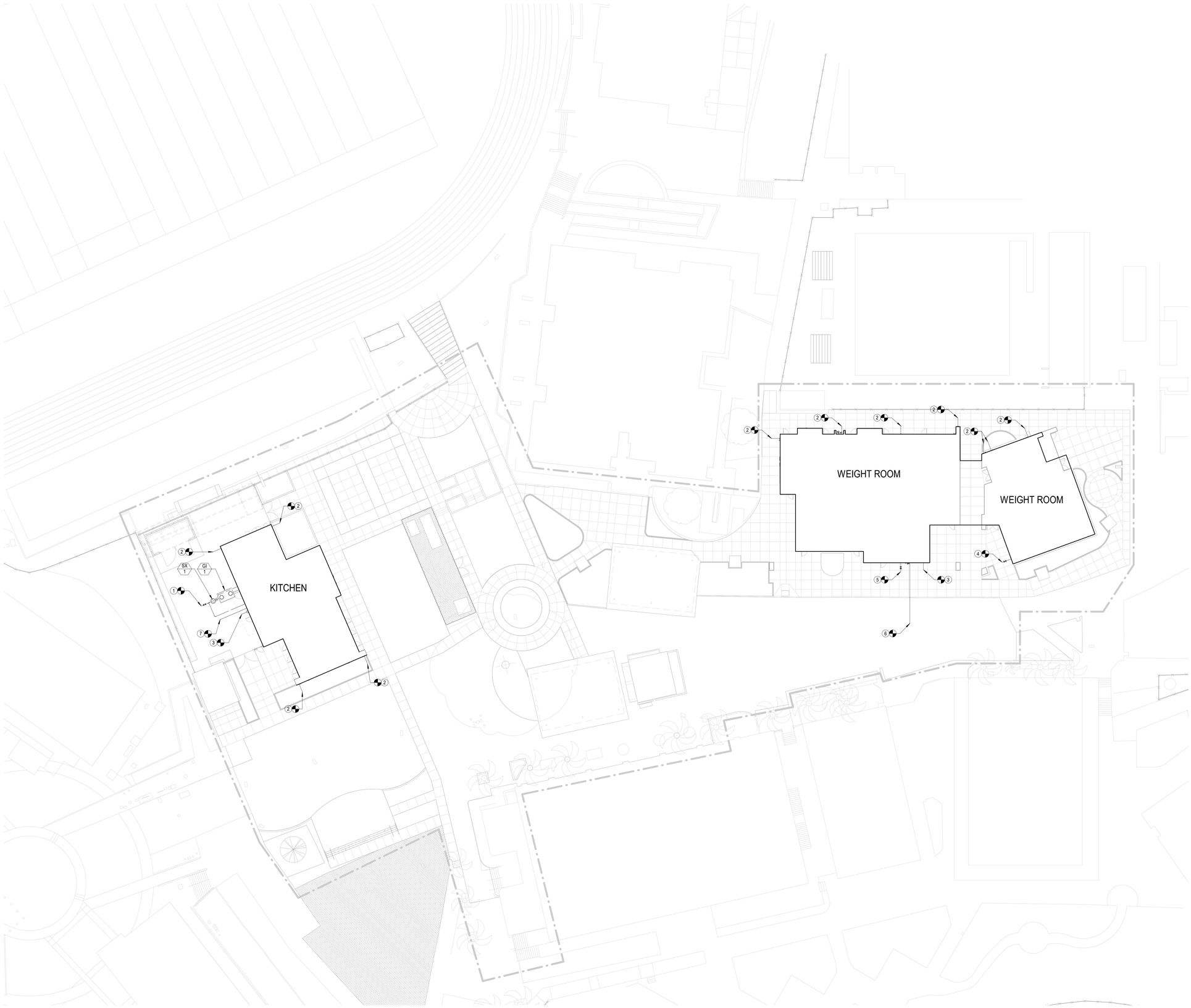

PLUMBING SITE PLAN | SCALE: 1" = 20'-0" | 1

STAMPS

IDENTIFICATION STAMP
DIV. OF THE STATE ARCHITECT
APP: 04-120895 INC:
REVIEWED FOR
SS ☑ FLS ☑ ACS ☑
DATE: 06/27/2022

CONSULTANT BRANDING

MA ENGINEERS
5160 Carroll Canyon Rd, Suite 200
San Diego, California 92121
Consulting Mechanical Engineers
T: 858 205-0030 www.ma-eng.com

RUHNAU CLARKE ARCHITECTS

KEY NOTES:

#	
1	4" SEWER. 5'-0" BELOW GRADE. POC TO CIVIL SEWER. SEE CIVIL DRAWINGS FOR CONTINUATION.
2	3" STORM DRAIN BELOW GRADE POC TO CIVIL. INVERT ELEVATION 16" BELOW FINISH GRADE. SEE CIVIL DRAWINGS FOR CONTINUATION.
3	2" CW. 18" BELOW FINISH FLOOR. POC TO CIVIL. SEE CIVIL DRAWINGS FOR CONTINUATION.
4	4" SEWER. 3'-6" BELOW GRADE. POC TO CIVIL SEWER. SEE CIVIL DRAWINGS FOR CONTINUATION.
5	4" SEWER. 4'-3" BELOW GRADE. POC TO CIVIL SEWER. SEE CIVIL DRAWINGS FOR CONTINUATION.
6	1" MPG POC TO EXISITING 2" MPG GAS LINE. -3'-0" BELOW FINISHED GRADE. PROVIDE NEW EMERGENCY GAS SHUT OFF VALVE AND SIGNAGE PER CPC 1210.9.3.
7	2" MPG POC TO EXISITING 2" MPG GAS LINE. -3'-0" BELOW FINISHED GRADE. PROVIDE NEW EMERGENCY GAS SHUT OFF VALVE AND SIGNAGE PER CPC 1210.9.3.

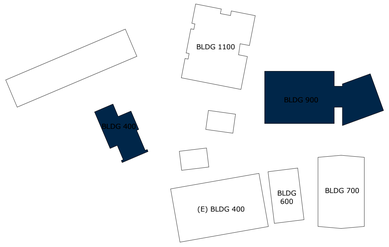

KEY PLAN NTS

GHS KITCHEN & WEIGHTROOM: 06/13/2022 DSA SUBMITTAL

PROJECT No. :1-30-55
6/20/2022 7:47:56 AM

DRAWN BY: CHECKED BY:

ISSUE No.	DATE	DESCRIPTION	REVISION No.	DATE	DESCRIPTION
ISSUE No.	DATE	DESCRIPTION	REVISION No.	DATE	DESCRIPTION
ISSUE No.	DATE	DESCRIPTION	REVISION No.	DATE	DESCRIPTION
ISSUE No.	DATE	DESCRIPTION	REVISION No.	DATE	DESCRIPTION

RUHNAUCLARKE.COM
3775 TENTH STREET, RIVERSIDE CALIFORNIA 92501 (951) 684 4664 / 5751 PALMER WAY, SUITE C, CARLSBAD CALIFORNIA 92010 (760) 438 5899

GHS KITCHEN & WEIGHTROOM
GROSSMONT HIGH SCHOOL
1100 MURRAY DR, EL CAJON, CA 92020
GROSSMONT UNION HIGH SCHOOL

PLUMBING SITE PLAN

P0-1.1

1-30-55

STAMPS

REGISTERED PROFESSIONAL ENGINEER — JERRY C. CAMPBELL — Reg. M 025911 — EXP. 6-30-23 — MECHANICAL — STATE OF CALIFORNIA

LICENSED ARCHITECT — RUSER CLARKE — No. C-21362 — Exp. 12-31-2024 — STATE OF CALIFORNIA

IDENTIFICATION STAMP
DIV. OF THE STATE ARCHITECT
APP: 04-120895 INC:
REVIEWED FOR
SS ☑ FLS ☑ ACS ☑
DATE: 06/27/2022

AGENCY
FILE NUMBER

CONSULTANT BRANDING

MA ENGINEERS
5160 Carroll Canyon Rd, Suite 200
San Diego, California 92121
Corporate Headquarters
T: 858 205-0030 www.ma-eng.com

RUHNAU CLARKE ARCHITECTS

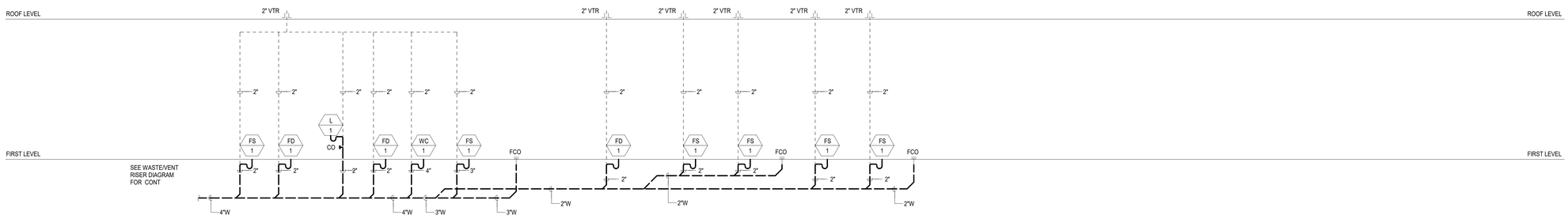

01 WASTE AND VENT RISER DIAGRAM
SCALE: NONE

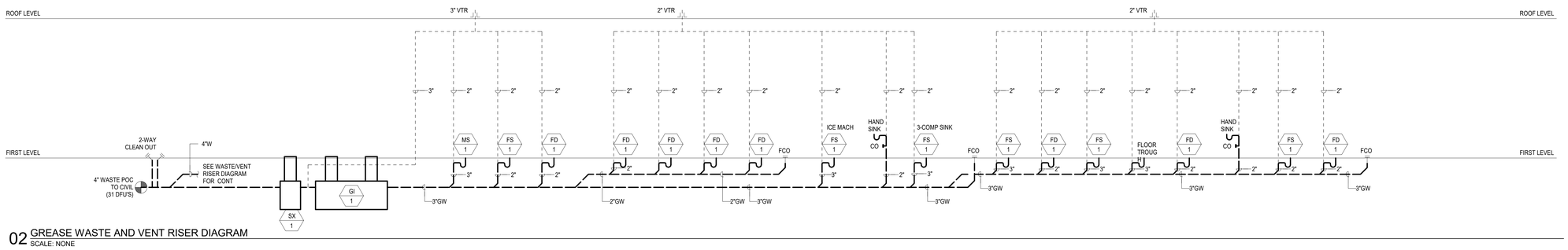

02 GREASE WASTE AND VENT RISER DIAGRAM
SCALE: NONE

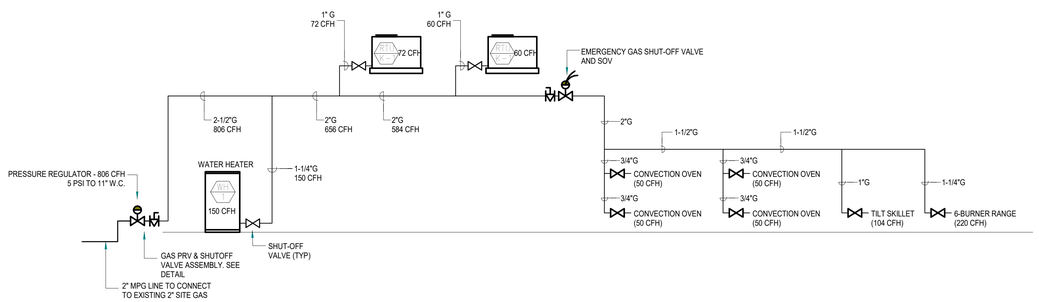

03 GAS RISER DIAGRAM
SCALE: NONE

BUILDING A — GAS LOAD SUMMARY — 5 PSI

ITEM		TOTAL - CFH
RTU UNIT (SPACE HEATING)	=	72
RTU UNIT (SPACE HEATING)	=	60
DOMESTIC HOT WATER HEATER	=	150
CONVECTION OVEN (50 CFH X 4)	=	200
TILTING SKILLET	=	104
6-BURNER RANGE	=	220
TOTAL	=	806 CFH

PIPE SIZING CHART BASED ON 175 FT. TOTAL DEVELOPED LENGTH.

*NOTE: TOTAL DEVELOPED LENGTH TAKEN FROM GAS METER LOCATION TO MOST REMOTE GAS-FIRED EQUIPMENT AT 5 PSI DELIVERY PRESSURE.

PIPE SIZING BASED ON 2019 CALIFORNIA PLUMBING CODE TABLE 1216.2(6).

BUILDING A — GAS LOAD SUMMARY — 11 INCHES W.C.

ITEM		TOTAL - CFH
RTU UNIT (SPACE HEATING)	=	72
RTU UNIT (SPACE HEATING)	=	60
DOMESTIC HOT WATER HEATER	=	150
CONVECTION OVEN (50 CFH X 4)	=	200
TILTING SKILLET	=	104
6-BURNER RANGE	=	220
TOTAL	=	806 CFH

PIPE SIZING CHART BASED ON 175 FT. TOTAL DEVELOPED LENGTH.

*NOTE: TOTAL DEVELOPED LENGTH TAKEN FROM GAS METER LOCATION TO MOST REMOTE GAS-FIRED EQUIPMENT AT 5 PSI DELIVERY PRESSURE.

PIPE SIZING BASED ON 2019 CALIFORNIA PLUMBING CODE TABLE 1216.2(1).

GHS KITCHEN & WEIGHTROOM: 06/13/2022 DSA SUBMITTAL

PROJECT No. :1-30-55
6/20/2022 7:47:56 AM

DRAWN BY: CHECKED BY:

ISSUE No.	DATE	DESCRIPTION	REVISION No.	DATE	DESCRIPTION
ISSUE No.	DATE	DESCRIPTION	REVISION No.	DATE	DESCRIPTION
ISSUE No.	DATE	DESCRIPTION	REVISION No.	DATE	DESCRIPTION
ISSUE No.	DATE	DESCRIPTION	REVISION No.	DATE	DESCRIPTION

RUHNAUCLARKE.COM
3775 TENTH STREET, RIVERSIDE CALIFORNIA 92501 (951) 684 4664 / 5751 PALMER WAY, SUITE C, CARLSBAD CALIFORNIA 92010 (760) 438 5899

GHS KITCHEN & WEIGHTROOM
GROSSMONT HIGH SCHOOL
1100 MURRAY DR, EL CAJON, CA 92020
GROSSMONT UNION HIGH SCHOOL

PLUMBING RISER DIAGRAMS

P0-4.1

1-30-55

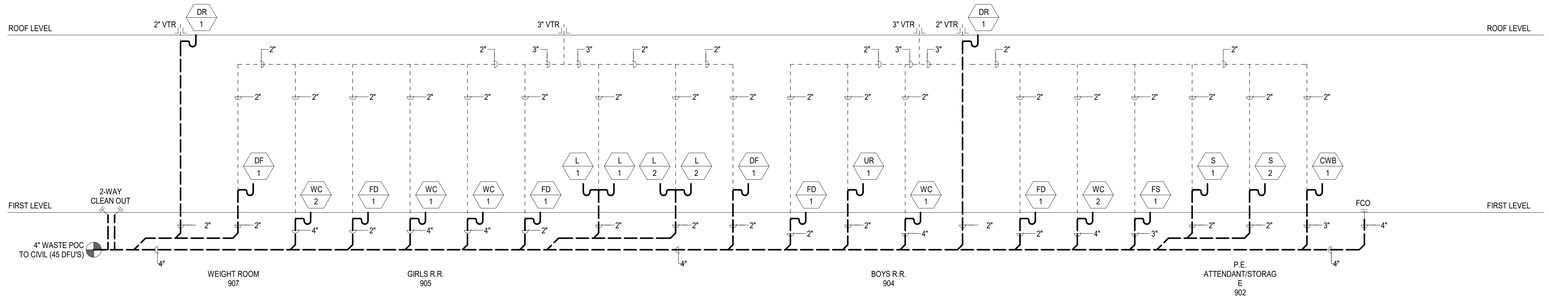

01 WEIGHT ROOM WASTE AND VENT RISER DIAGRAM
SCALE: NONE

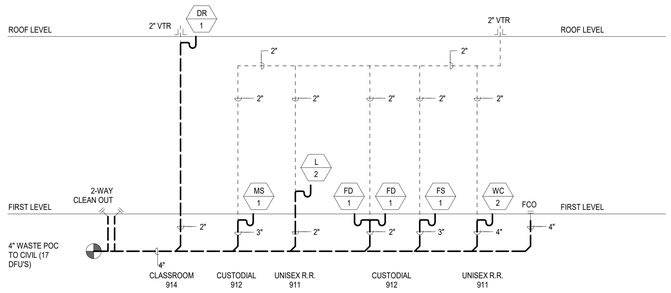

02 WEIGHT ROOM WASTE AND VENT RISER DIAGRAM
SCALE: NONE

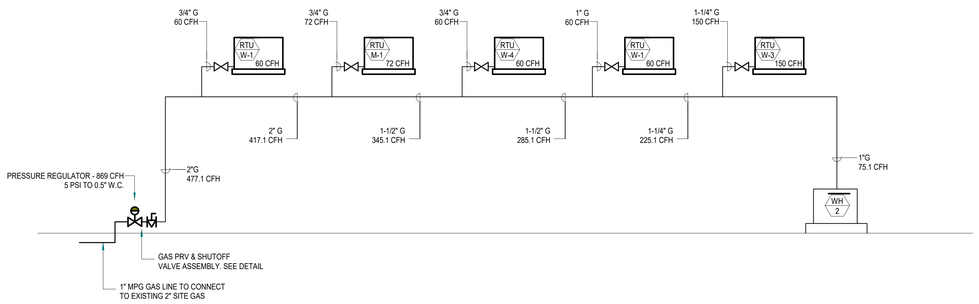

03 WEIGHT ROOM GAS RISER DIAGRAM
SCALE: NONE

WEIGHT ROOM — GAS LOAD SUMMARY — 5 PSI

ITEM		TOTAL - CFH
RTU UNIT (W-1)	=	60
RTU UNIT (M-1)	=	72
RTU UNIT (W-4)	=	60
RTU UNIT (W-1)	=	60
RTU UNIT (W-3)	=	150
WATER HEATER (WH-2)	=	75.1
TOTAL	=	477.1 CFH

PIPE SIZING CHART BASED ON 150 FT. TOTAL DEVELOPED LENGTH.

*NOTE: TOTAL DEVELOPED LENGTH TAKEN FROM GAS METER LOCATION TO MOST REMOTE GAS-FIRED EQUIPMENT AT 5 PSI DELIVERY PRESSURE.

PIPE SIZING BASED ON 2019 CALIFORNIA PLUMBING CODE TABLE 1216.2(6).

WEIGHT ROOM — GAS LOAD SUMMARY — 11 INCHES W.C.

ITEM		TOTAL - CFH
RTU UNIT (W-1)	=	60
RTU UNIT (M-1)	=	72
RTU UNIT (W-4)	=	60
RTU UNIT (W-1)	=	60
RTU UNIT (W-3)	=	150
WATER HEATER (WH-2)	=	75.1
TOTAL	=	477.1 CFH

PIPE SIZING CHART BASED ON 175 FT. TOTAL DEVELOPED LENGTH.

*NOTE: TOTAL DEVELOPED LENGTH TAKEN FROM GAS REGULATOR LOCATION TO MOST REMOTE GAS-FIRED EQUIPMENT AT >2 PSI DELIVERY PRESSURE.

PIPE SIZING BASED ON 2019 CALIFORNIA PLUMBING CODE TABLE 1216.2(1).

STAMPS

IDENTIFICATION STAMP
DIV. OF THE STATE ARCHITECT
APP: 04-120895 INC:
REVIEWED FOR
SS ☑ FLS ☑ ACS ☑
DATE: 06/27/2022

CONSULTANT BRANDING

MA ENGINEERS
5160 Carroll Canyon Rd, Suite 200
San Diego, California 92121
Corporate Headquarters
T: 858 205-0030 www.ma-eng.com

RUHNAU CLARKE ARCHITECTS

GHS KITCHEN & WEIGHTROOM: 06/13/2022 DSA SUBMITTAL

PROJECT No. :1-30-55
6/20/2022 7:47:57 AM

DRAWN BY: CHECKED BY:

ISSUE No.____ DATE____ DESCRIPTION____
REVISION No.____ DATE____ DESCRIPTION____

RUHNAUCLARKE.COM
3775 TENTH STREET, RIVERSIDE CALIFORNIA 92501 (951) 684 4664 / 5751 PALMER WAY, SUITE C, CARLSBAD CALIFORNIA 92010 (760) 438 5899

GHS KITCHEN & WEIGHTROOM
GROSSMONT HIGH SCHOOL
1100 MURRAY DR, EL CAJON, CA 92020
GROSSMONT UNION HIGH SCHOOL

PLUMBING RISER DIAGRAMS

P0-4.2

1-30-55

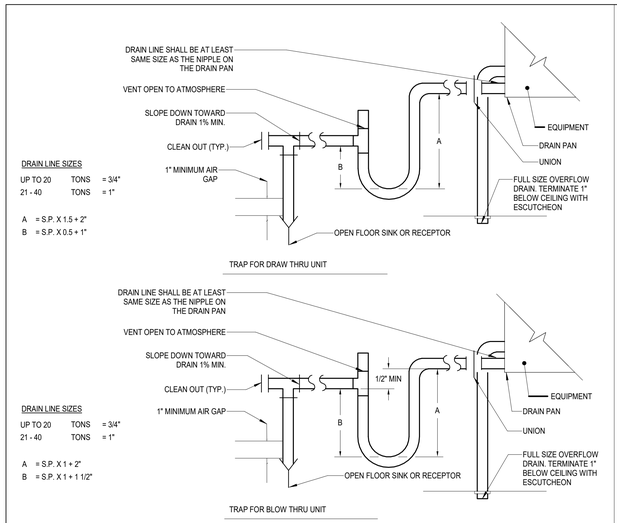

TYPICAL CONDENSATE DRAIN DETAIL | SCALE: NO SCALE | 7

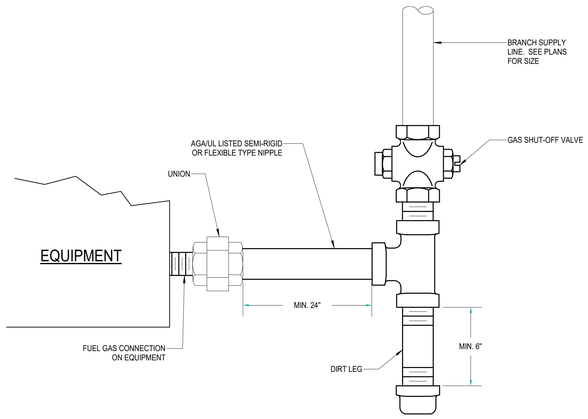

EQUIPMENT FUEL GAS CONECTION | SCALE: NO SCALE | 4

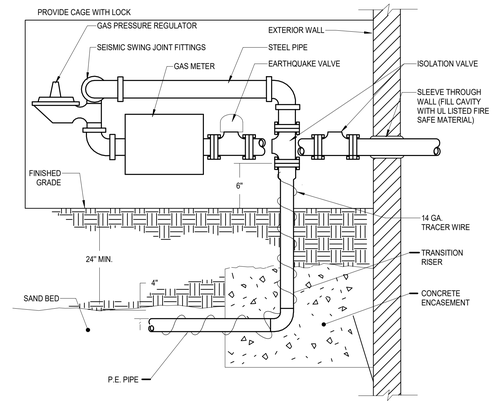

GAS PRESSURE REGULATOR & METER ASSY. DETAIL | SCALE: 12" = 1'-0" | 1

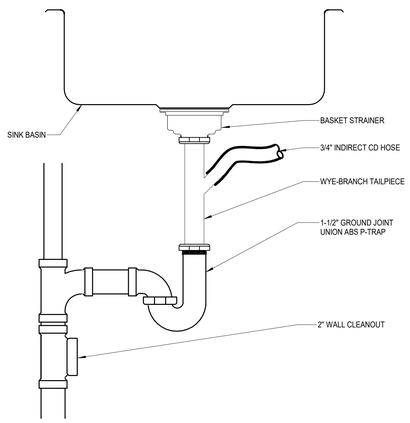

SINK/LAVATORY CONDENSATE CONNECTION | SCALE: 12" = 1'-0" | 8

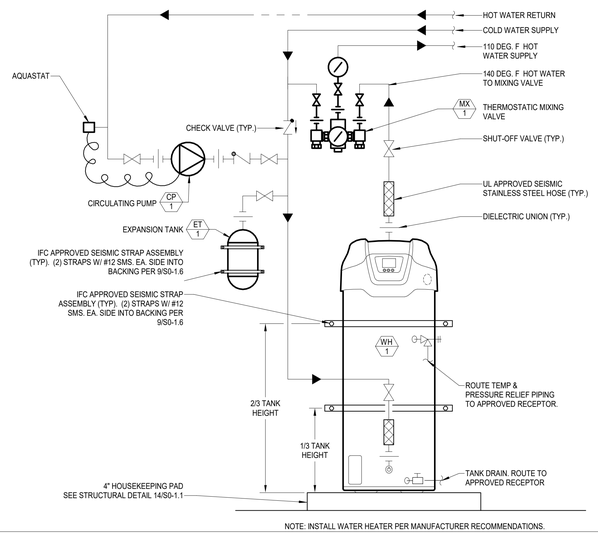

CONDENSING GAS WATER HEATER | SCALE: NO SCALE | 5

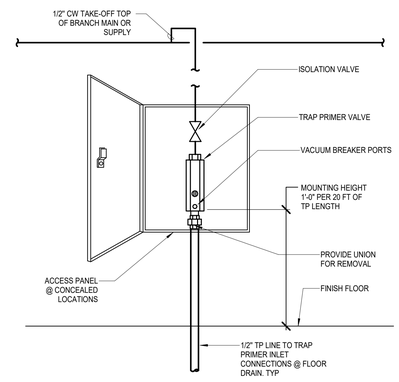

TRAP PRIMER IN ACCESS PANEL DETAIL | SCALE: 12" = 1'-0" | 2

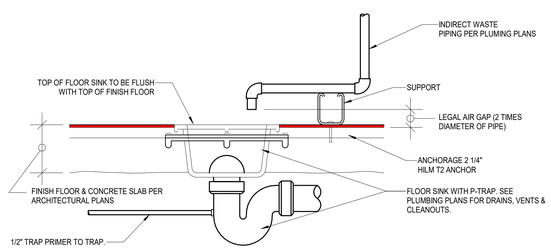

FLOOR DRAIN WITH INDIRECT WASTE | SCALE: NO SCALE | 9

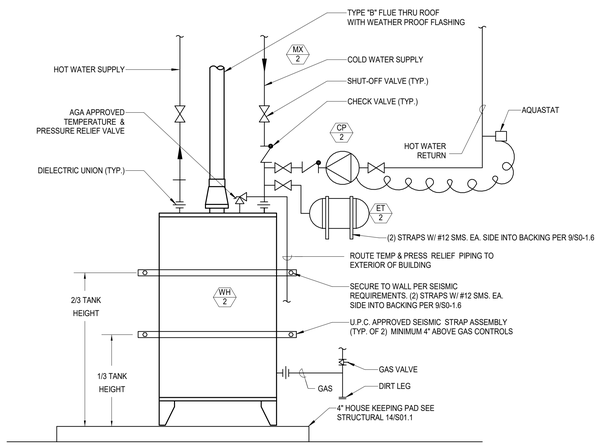

ATMOSPHERIC GAS WATER HEATER | SCALE: NO SCALE | 6

WATER HAMMER ARRESTOR SCHEDULE

P.D.I. SIZE	"A"	"B"	"C"	"D"	"E"	"F"
FIXTURE UNITS	1-11	12-32	33-60	61-113	114-154	155-330
CONNECTION SIZE	3/4"	3/4"	1"	1"	1"	1"

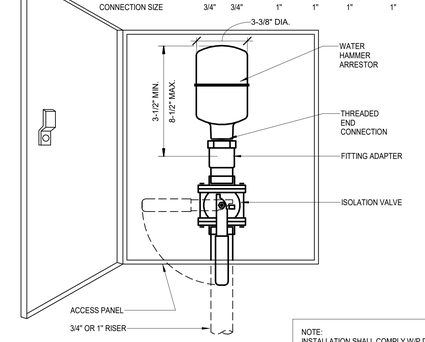

NOTE:
INSTALLATION SHALL COMPLY W/P.D.I. STANDARD WH201. UNITS NOT SIZED ON PLAN SHALL BE SIZED PER SCHEDULE ABOVE

WATER HAMMER ARRESTOR ASSEMBLY DETAIL | SCALE: 12" = 1'-0" | 3

REGISTERED PROFESSIONAL ENGINEER — JOHN C. CAMPBELL — No. M 025911 — EXP. 6-30-23 — MECHANICAL — STATE OF CALIFORNIA

LICENSED ARCHITECT — ROGER CLARKE — No. C-21360 — Exp. 12-31-2023 — STATE OF CALIFORNIA

STAMPS

IDENTIFICATION STAMP
DIV. OF THE STATE ARCHITECT
APP: 04-120895 INC:
REVIEWED FOR
SS ☑ FLS ☑ ACS ☑
DATE: 06/27/2022
AGENCY FILE NUMBER

CONSULTANT BRANDING

MA ENGINEERS
5160 Carroll Canyon Rd, Suite 200
San Diego, California 92121
Corporate Headquarters
T: 858 205-0030 www.ma-eng.com

RUHNAU CLARKE ARCHITECTS

GHS KITCHEN & WEIGHTROOM: 06/13/2022 DSA SUBMITTAL

PROJECT No. :1-30-55
6/20/2022 7:47:58 AM

DRAWN BY: CHECKED BY:

ISSUE No.____ DATE____ DESCRIPTION____
REVISION No.____ DATE____ DESCRIPTION____

RUHNAUCLARKE.COM

3775 TENTH STREET, RIVERSIDE CALIFORNIA 92501 (951) 684 4664 / 5751 PALMER WAY, SUITE C, CARLSBAD CALIFORNIA 92010 (760) 438 5899

GHS KITCHEN & WEIGHTROOM
GROSSMONT HIGH SCHOOL
1100 MURRAY DR, EL CAJON, CA 92020
GROSSMONT UNION HIGH SCHOOL

PLUMBING DETAILS

P0-5.1

1-30-55

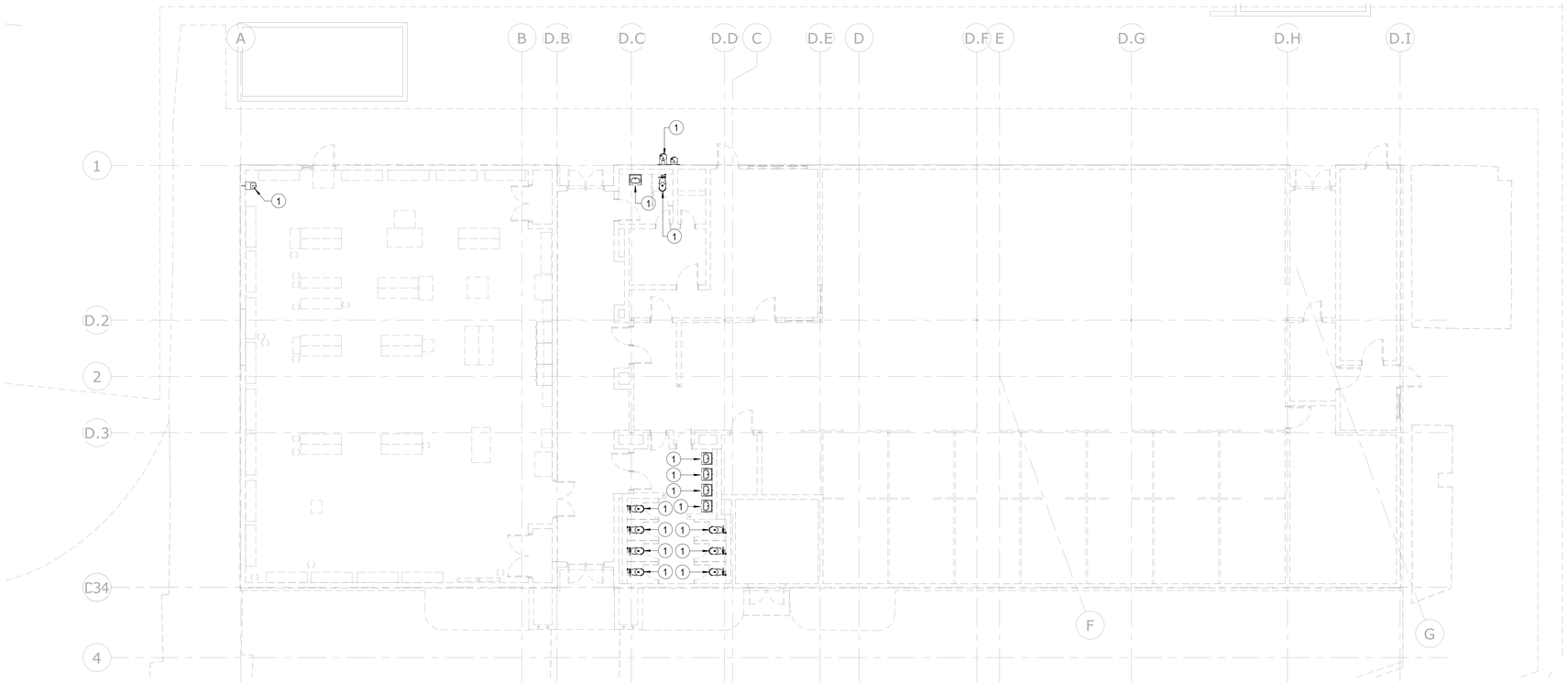

PLUMBING DEMO FLOOR PLAN | SCALE: 1/8" = 1'-0" | 1

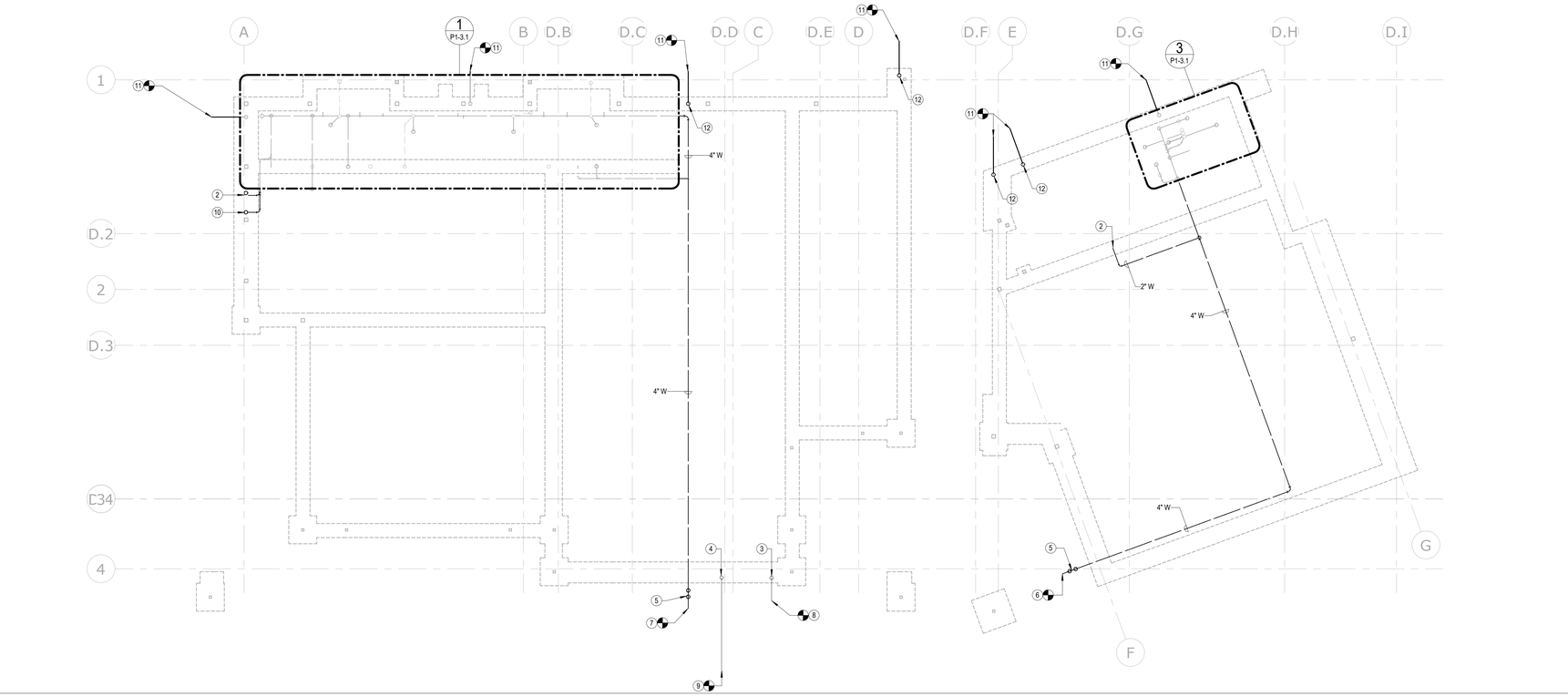

PLUMBING WEIGHT ROOM FOUNDATION PLAN | SCALE: 1/8" = 1'-0" | 2

STAMPS

REGISTERED PROFESSIONAL ENGINEER
ROY C. CAMPBELL
No. M 025911
EXP. 6-30-23
MECHANICAL
STATE OF CALIFORNIA

LICENSED ARCHITECT
ROGER CLARKE
No. C-21340
Exp. 10-30-24
STATE OF CALIFORNIA

IDENTIFICATION STAMP
DIV. OF THE STATE ARCHITECT
APP: 04-120895 INC:
REVIEWED FOR
SS ☑ FLS ☑ ACS ☑
DATE: 06/27/2022

CONSULTANT BRANDING

MA ENGINEERS
5160 Carroll Canyon Rd, Suite 200
San Diego, California 92121
Consulting Mechanical Engineers
T. 858 200-0030 www.ma-engr.com

RUHNAU CLARKE ARCHITECTS

KEY NOTES:

#	
1	REMOVE ALL EXISTING PLUMBING FIXTURES AND ASSOCIATED PIPING.
2	2" WASTE UP.
3	2" CW UP.
4	2" GAS UP.
5	2 WAY CLEANOUT.
6	4" SEWER. 3'-6" BELOW GRADE. POC TO CIVIL SEWER. SEE CIVIL DRAWINGS FOR CONTINUATION.
7	4" SEWER. 4'-3" BELOW GRADE. POC TO CIVIL SEWER. SEE CIVIL DRAWINGS FOR CONTINUATION.
8	2" CW. 18" BELOW FINISH FLOOR. POC TO CIVIL. SEE CIVIL DRAWINGS FOR CONTINUATION.
9	1" MPG POC TO EXISITING 2" MPG GAS LINE. -3'-0" BELOW FINISHED GRADE. PROVIDE NEW EMERGENCY GAS SHUT OFF VALVE AND SIGNAGE PER CPC 1210.9.3.
10	3" WASTE UP.
11	3" STORM DRAIN BELOW GRADE POC TO CIVIL. INVERT ELEVATION 16" BELOW FINISH GRADE. SEE CIVIL DRAWINGS FOR CONTINUATION.
12	3" STORM DRAIN UP.

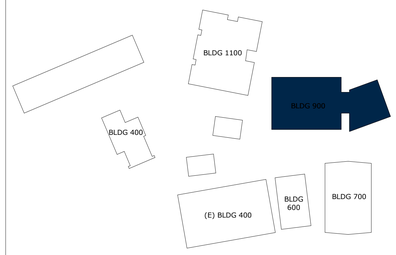

KEY PLAN
NTS

GHS KITCHEN & WEIGHTROOM: 06/13/2022 DSA SUBMITTAL

PROJECT No. :1-30-55
6/20/2022 7:48:00 AM

DRAWN BY: CHECKED BY:

ISSUE No.	DATE	DESCRIPTION	REVISION No.	DATE	DESCRIPTION
ISSUE No.	DATE	DESCRIPTION	REVISION No.	DATE	DESCRIPTION
ISSUE No.	DATE	DESCRIPTION	REVISION No.	DATE	DESCRIPTION
ISSUE No.	DATE	DESCRIPTION	REVISION No.	DATE	DESCRIPTION

RUHNAUCLARKE.COM
3775 TENTH STREET, RIVERSIDE CALIFORNIA 92501 (951) 684 4664 / 5751 PALMER WAY, SUITE C, CARLSBAD CALIFORNIA 92010 (760) 438 5899

GHS KITCHEN & WEIGHTROOM
GROSSMONT HIGH SCHOOL
1100 MURRAY DR, EL CAJON, CA 92020
GROSSMONT UNION HIGH SCHOOL

PLUMBING WEIGHT ROOM DEMO & UNDERGROUND PLANS

P1-2.1

1-30-55

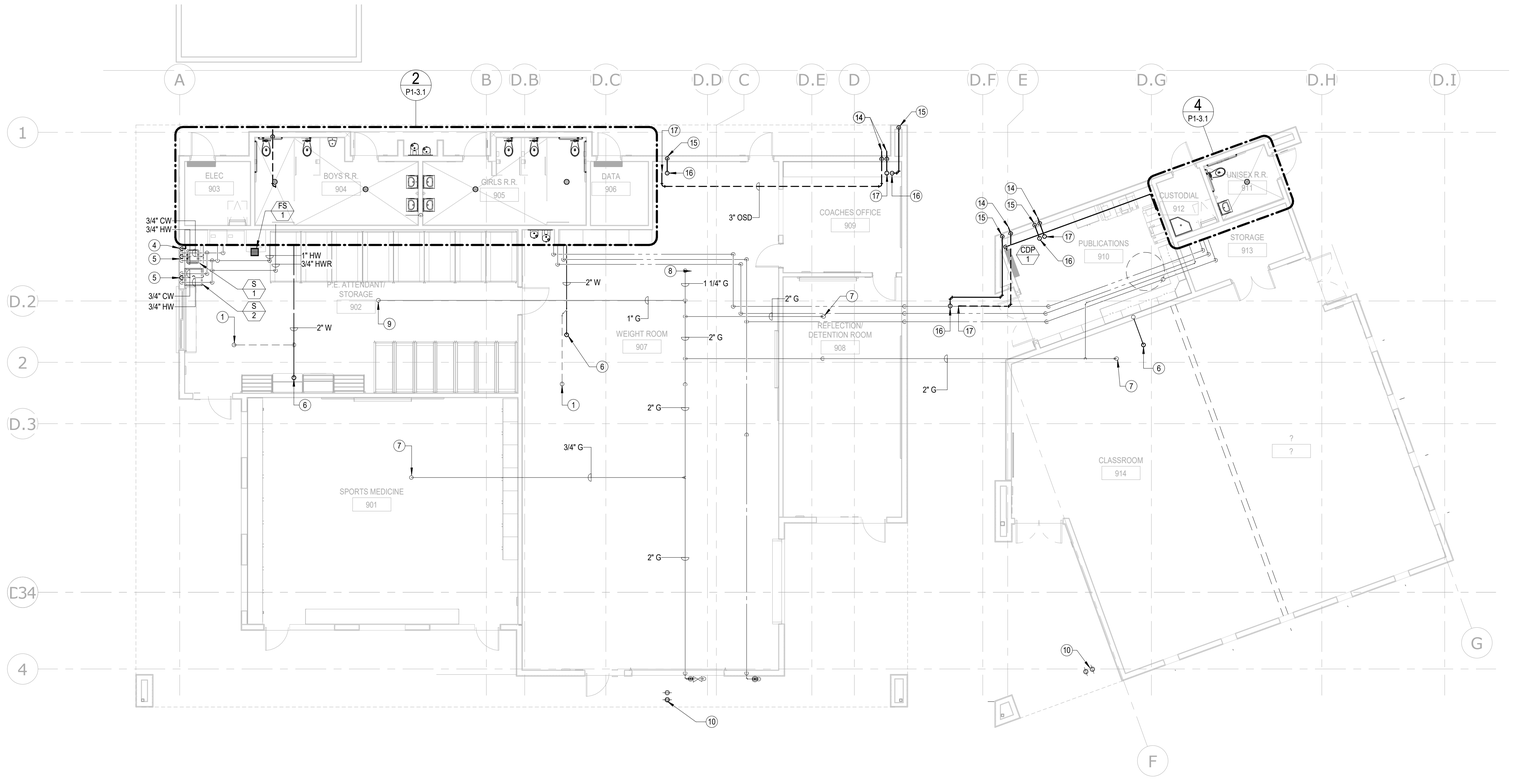

PLUMBING WEIGHT ROOM FLOOR PLAN SCALE: 1/8" = 1'-0" 2

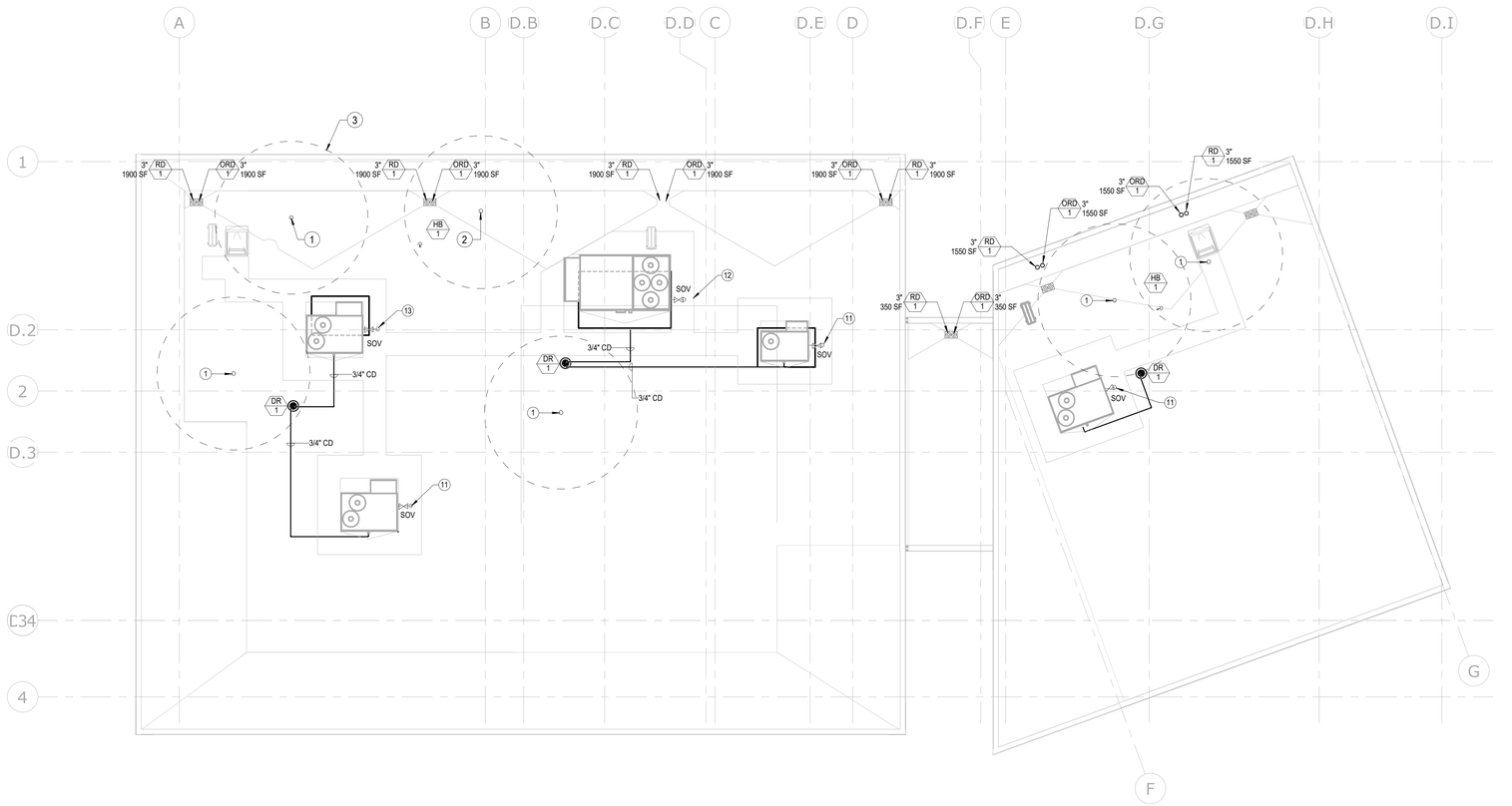

PLUMBING WEIGHT ROOM ROOF PLAN SCALE: 1/8" = 1'-0" 1

STAMPS

IDENTIFICATION STAMP
DIV. OF THE STATE ARCHITECT
APP: 04-120895 INC:
REVIEWED FOR
SS ☑ FLS ☑ ACS ☑
DATE: 06/27/2022

CONSULTANT BRANDING

MA ENGINEERS
5160 Carroll Canyon Rd, Suite 200
San Diego, California 92121
Consulting Mechanical Engineers
T. 858 200-0030 www.ma-engr.com

RUHNAU CLARKE ARCHITECTS

KEY NOTES:

#	
1	2" VTR.
2	2" VENT UP.
3	10'-0" CLEARANCE FROM ANY INTAKE OR OPERABLE WINDOW.
4	3/4" CONDENSATE DRAIN DOWN IN WALL. EXTEND TO SINK'S TRAP WYE BRANCH TAILPIECE. SEE DETAIL.
5	2" VENT DOWN.
6	2" WASTE UP TO DRAIN RECEPTOR.
7	3/4" GAS UP.
8	1 1/4" GAS UP.
9	1" GAS UP.
10	2 WAY CLEANOUT.
11	3/4" GAS DOWN.
12	1 1/4" GAS DOWN.
13	1" GAS DOWN.
14	DAYLIGHT 3" OVERFLOW STORM DRAIN @+6" AFG.
15	3" STORM DRAIN DOWN.
16	3" STORM DRAIN UP.
17	3" OVERFLOW STORM DRAIN UP.

GENERAL NOTES:

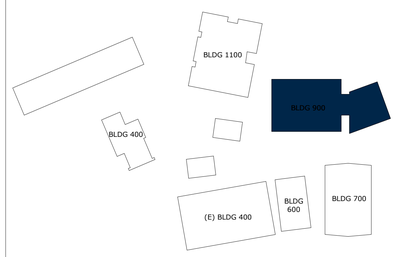

KEY PLAN NTS

GHS KITCHEN & WEIGHTROOM: 06/13/2022 DSA SUBMITTAL

PROJECT No. :1-30-55
6/20/2022 7:48:04 AM

DRAWN BY: CHECKED BY:
ISSUE No. DATE DESCRIPTION REVISION No. DATE DESCRIPTION
ISSUE No. DATE DESCRIPTION REVISION No. DATE DESCRIPTION
ISSUE No. DATE DESCRIPTION REVISION No. DATE DESCRIPTION
ISSUE No. DATE DESCRIPTION REVISION No. DATE DESCRIPTION

RUHNAUCLARKE.COM
3775 TENTH STREET, RIVERSIDE CALIFORNIA 92501 (951) 684 4664 / 5751 PALMER WAY, SUITE C, CARLSBAD CALIFORNIA 92010 (760) 438 5899

GHS KITCHEN & WEIGHTROOM
GROSSMONT HIGH SCHOOL
1100 MURRAY DR, EL CAJON, CA 92020
GROSSMONT UNION HIGH SCHOOL

PLUMBING WEIGHT FLOOR & ROOF PLAN

P1-2.2

1-30-55

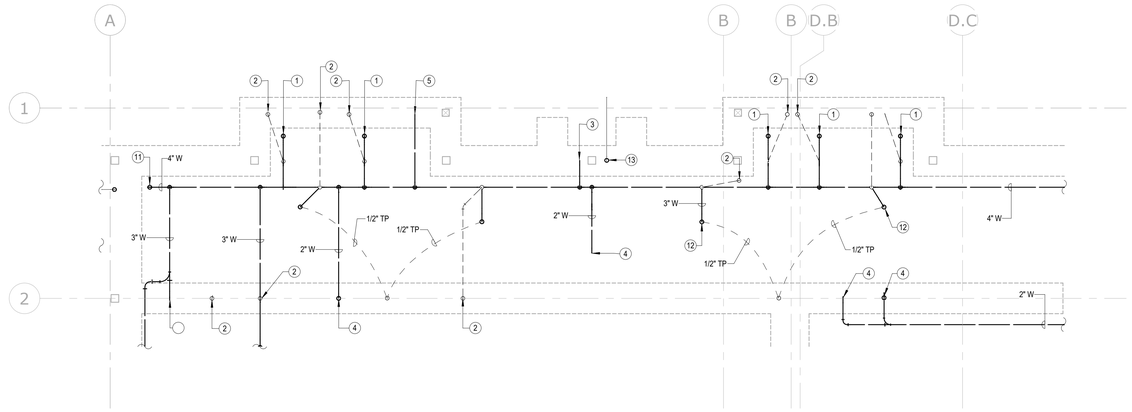

PLUMBING FOUNDATION PLAN - RR 146, 147, 151 & 148 | SCALE: 1/4" = 1'-0" | 1

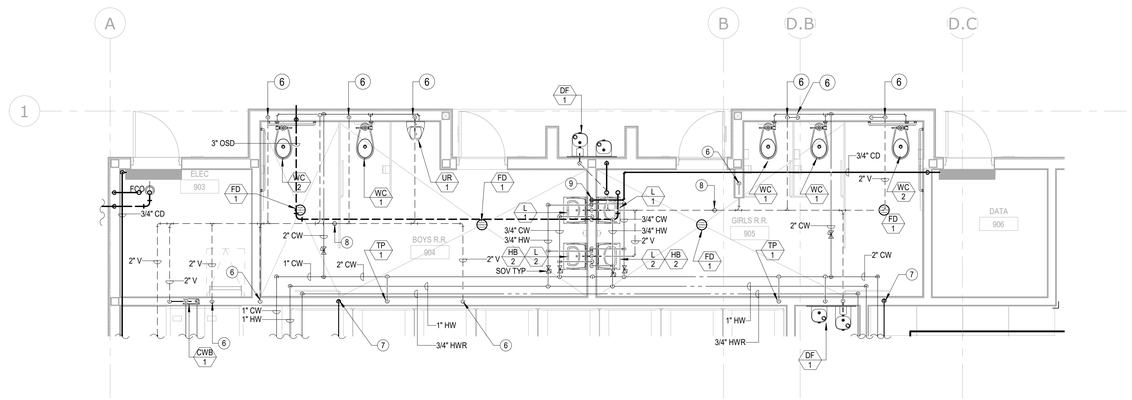

PLUMBING PLAN - RR 146, 147, 151 & CUSTODIAL 148 | SCALE: 1/4" = 1'-0" | 2

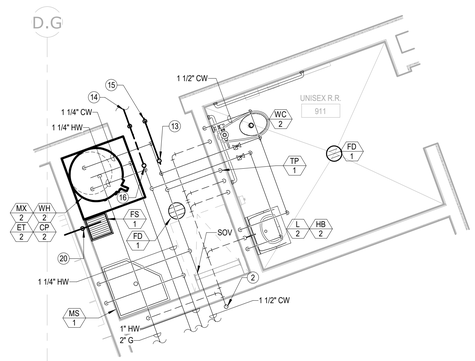

PLUMBING WEIGHT ROOM PLAN - RR 143 | SCALE: 3/8" = 1'-0" | 4

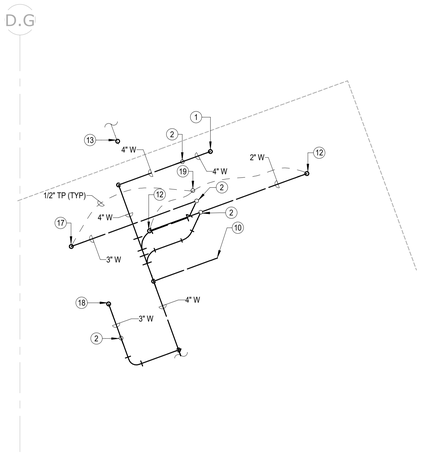

PLUMBING WEIGHT ROOM FOUNDATION PLAN - RR 143 | SCALE: 3/8" = 1'-0" | 3

REGISTERED PROFESSIONAL ENGINEER
RODY C. CAMPBELL
Reg. M 025911
EXP. 6-30-23
MECHANICAL
STATE OF CALIFORNIA

LICENSED ARCHITECT
ROBERT CLARKE
No. C-21382
Exp. 12-31-23
STATE OF CALIFORNIA

STAMPS

IDENTIFICATION STAMP
DIV. OF THE STATE ARCHITECT
APP: 04-120895 INC:
REVIEWED FOR
SS ☑ FLS ☑ ACS ☑
DATE: 06/27/2022

AGENCY
FILE No.

CONSULTANT BRANDING

MA ENGINEERS
5160 Carroll Canyon Rd, Suite 200
San Diego, California 92121
Contact: Matthew Arbogast
T: 858 205-0030 www.ma-eng.com

RUHNAU CLARKE ARCHITECTS

KEY NOTES:

#	
1	4" WASTE UP TO WATER CLOSET.
2	2" VENT UP.
3	2" WASTE UP TO ELECTRIC WATER COOLER.
4	2" WASTE UP.
5	2" WASTE UP URINAL.
6	2" VENT DOWN.
7	2" WASTE DOWN.
8	3" VTR.
9	3/4" CONDENSATE DRAIN DOWN IN WALL. EXTEND TO LAVATORY'S TRAP WYE BRANCH TAILPIECE. SEE DETAIL.
10	2" WASTE UP TO FIXTURE.
11	4" WASTE UP TO FLOOR CLEANOUT.
12	2" WASTE UP TO FLOOR DRAIN.
13	3" STORM DRAIN UP.
14	DAYLIGHT 3" OVERFLOW STORM DRAIN @+6" AFG.
15	3" STORM DRAIN DOWN.
16	3" OVERFLOW STORM DRAIN UP.
17	3" WASTE UP TO FLOOR SINK.
18	2" WASTE UP TO MOP SINK.
19	1/2" CW UP TO TRAP PRIMER.
20	3/4" CONDENSATE DRAIN DOWN IN WALL AND DRAIN INDIRECT TO FLOOR SINK.

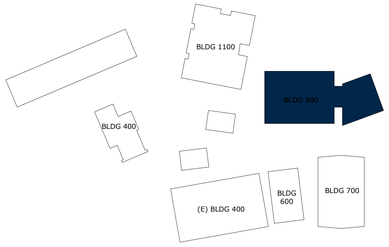

KEY PLAN
NTS

GHS KITCHEN & WEIGHTROOM: 06/13/2022 DSA SUBMITTAL

PROJECT No. :1-30-55
6/20/2022 7:48:08 AM

DRAWN BY: CHECKED BY:

ISSUE No.	DATE	DESCRIPTION	REVISION No.	DATE	DESCRIPTION
ISSUE No.	DATE	DESCRIPTION	REVISION No.	DATE	DESCRIPTION
ISSUE No.	DATE	DESCRIPTION	REVISION No.	DATE	DESCRIPTION
ISSUE No.	DATE	DESCRIPTION	REVISION No.	DATE	DESCRIPTION

RUHNAUCLARKE.COM
3775 TENTH STREET, RIVERSIDE CALIFORNIA 92501 (951) 684 4664 / 5751 PALMER WAY, SUITE C, CARLSBAD CALIFORNIA 92010 (760) 438 5899

GHS KITCHEN & WEIGHTROOM
GROSSMONT HIGH SCHOOL
1100 MURRAY DR, EL CAJON, CA 92020
GROSSMONT UNION HIGH SCHOOL

PLUMBING ENLARGED PLANS

P1-3.1

1-30-55

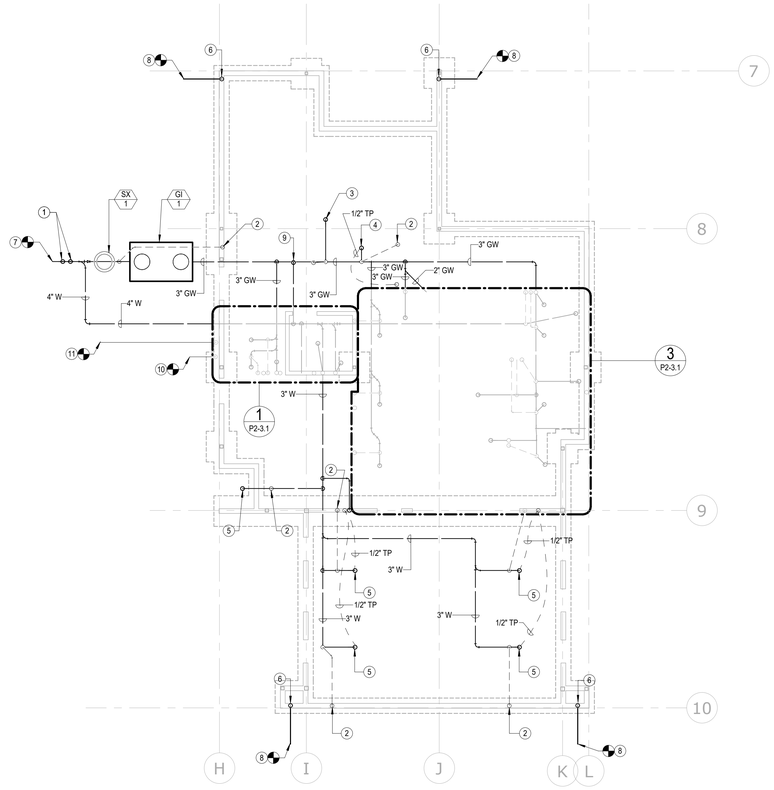

PLUMBING KITCHEN FOUNDATION PLAN | SCALE: 1/8" = 1'-0" | 1

STAMPS

REGISTERED PROFESSIONAL ENGINEER — JERRY C. CAMPBELL — Reg. M 025911 — EXP. 6-30-23 — MECHANICAL — STATE OF CALIFORNIA

LICENSED ARCHITECT — ROGER CLARKE — No. C-21365 — Exp. 12-31-2023 — STATE OF CALIFORNIA

IDENTIFICATION STAMP
DIV. OF THE STATE ARCHITECT
APP: 04-120895 INC:
REVIEWED FOR
SS ☑ FLS ☑ ACS ☑
DATE: 06/27/2022

AGENCY
FILE No.

CONSULTANT BRANDING

MA ENGINEERS
5160 Carroll Canyon Rd, Suite 200
San Diego, California 92121
Cross-disciplinary Mechanical Engineers
T: 858 208-0030 www.ma-eng.com

RUHNAU CLARKE ARCHITECTS

KEY NOTES:

#	
1	4" WASTE UP TO 2-WAY CLEAN-OUT.
2	2" VENT UP.
3	3" GREASE WASTE UP TO FLOOR SINK.
4	3" GREASE WASTE UP TO FLOOR DRAIN.
5	3" WASTE UP TO FLOOR DRAIN.
6	3" STORM DRAIN UP.
7	4" SEWER. 5'-0" BELOW GRADE. POC TO CIVIL SEWER. SEE CIVIL DRAWINGS FOR CONTINUATION.
8	3" STORM DRAIN BELOW GRADE POC TO CIVIL. INVERT ELEVATION 16" BELOW FINISH GRADE. SEE CIVIL DRAWINGS FOR CONTINUATION.
9	2" WASTE UP.
10	2" CW. 18" BELOW FINISH FLOOR. POC TO CIVIL. SEE CIVIL DRAWINGS FOR CONTINUATION.
11	2" MPG POC TO EXISITING 2" MPG GAS LINE. -3'-0" BELOW FINISHED GRADE. PROVIDE NEW EMERGENCY GAS SHUT OFF VALVE AND SIGNAGE PER CPC 1210.9.3.

GENERAL NOTES:

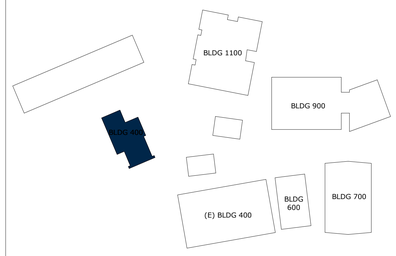

KEY PLAN NTS

GHS KITCHEN & WEIGHTROOM: 06/13/2022 DSA SUBMITTAL

PROJECT No. :1-30-55
6/20/2022 7:48:09 AM

DRAWN BY: CHECKED BY:

ISSUE No.	DATE	DESCRIPTION	REVISION No.	DATE	DESCRIPTION
ISSUE No.	DATE	DESCRIPTION	REVISION No.	DATE	DESCRIPTION
ISSUE No.	DATE	DESCRIPTION	REVISION No.	DATE	DESCRIPTION
ISSUE No.	DATE	DESCRIPTION	REVISION No.	DATE	DESCRIPTION

RUHNAUCLARKE.COM
3775 TENTH STREET, RIVERSIDE CALIFORNIA 92501 (951) 684 4664 / 5751 PALMER WAY, SUITE C, CARLSBAD CALIFORNIA 92010 (760) 438 5899

GHS KITCHEN & WEIGHTROOM
GROSSMONT HIGH SCHOOL
1100 MURRAY DR, EL CAJON, CA 92020
GROSSMONT UNION HIGH SCHOOL

PLUMBING KITCHEN UNDERGROUND PLAN

P2-2.1

1-30-55

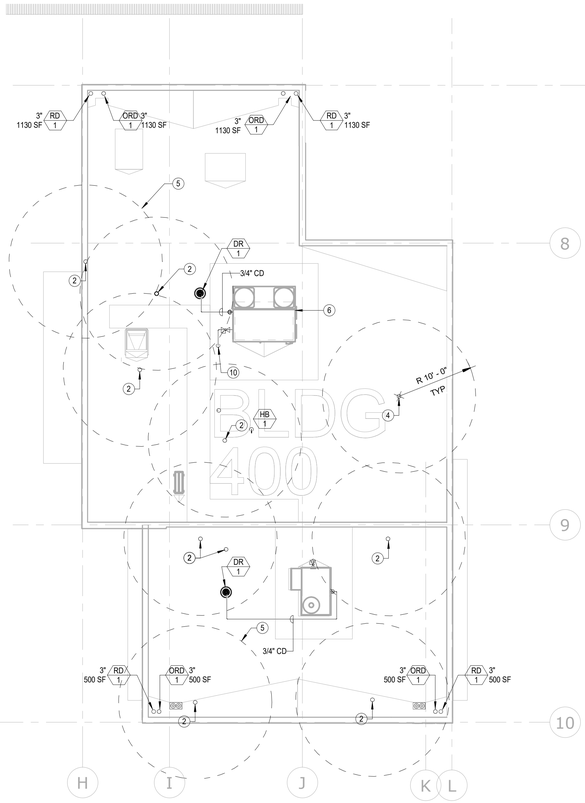

PLUMBING KITCHEN ROOF PLAN | SCALE: 1/8" = 1'-0" | 2

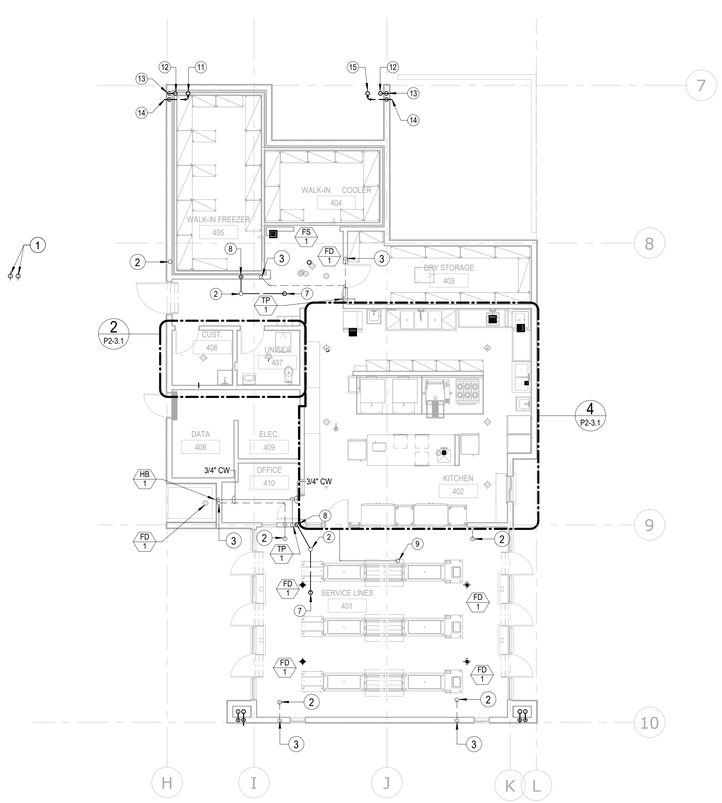

PLUMBING KITCHEN PLAN | SCALE: 1/8" = 1'-0" | 1

REGISTERED PROFESSIONAL ENGINEER
RODY C. CAMPBELL
Reg. M 025911
EXP. 6-30-23
MECHANICAL
STATE OF CALIFORNIA

LICENSED ARCHITECT
ROGER CLARKE
No. C-21365
Exp. 12-31-2023
STATE OF CALIFORNIA

STAMPS

IDENTIFICATION STAMP
DIV. OF THE STATE ARCHITECT
APP: 04-120895 INC:
REVIEWED FOR
SS ☑ FLS ☑ ACS ☑
DATE: 06/27/2022

AGENCY
FILE No.

CONSULTANT BRANDING

MA ENGINEERS
5160 Carroll Canyon Rd, Suite 200
San Diego, California 92121
Construction Management Engineers
T: 858 208-0030 www.ma-eng.com

RUHNAU CLARKE ARCHITECTS

KEY NOTES:

#	
1	4" WASTE UP TO 2-WAY CLEAN-OUT.
2	2" VTR.
3	2" VENT DOWN.
4	3" VTR.
5	10'-0" CLEARANCE FROM ANY INTAKE OR OPERABLE WINDOW.
6	MECHANICAL EQUIPMENT SHOWN FOR REFERENCE ONLY. SEE MECHANICAL DRAWINGS (TYP.)
7	2" WASTE UP TO DRAIN RECEPTOR.
8	2" WASTE DOWN.
9	1" GAS UP.
10	1" GAS DOWN.
11	3" OVERFLOW STORM DRAIN DOWN.
12	3" STORM DRAIN UP.
13	3" STORM DRAIN DOWN.
14	DAYLIGHT 3" OVERFLOW STORM DRAIN @+6" AFG.
15	3" OVERFLOW STORM DRAIN UP.

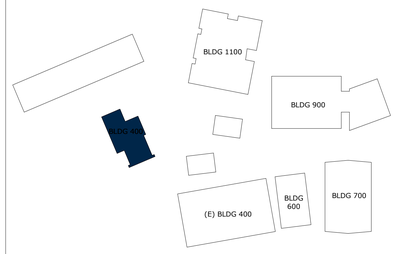

KEY PLAN NTS

GHS KITCHEN & WEIGHTROOM: 06/13/2022 DSA SUBMITTAL

PROJECT No. :1-30-55
6/20/2022 7:48:14 AM

DRAWN BY: CHECKED BY:

ISSUE No.____ DATE____ DESCRIPTION____
ISSUE No.____ DATE____ DESCRIPTION____
ISSUE No.____ DATE____ DESCRIPTION____
ISSUE No.____ DATE____ DESCRIPTION____

REVISION No.____ DATE____ DESCRIPTION____
REVISION No.____ DATE____ DESCRIPTION____
REVISION No.____ DATE____ DESCRIPTION____
REVISION No.____ DATE____ DESCRIPTION____

RUHNAUCLARKE.COM
3775 TENTH STREET, RIVERSIDE CALIFORNIA 92501 (951) 684 4664 / 5751 PALMER WAY, SUITE C, CARLSBAD CALIFORNIA 92010 (760) 438 5899

GHS KITCHEN & WEIGHTROOM
GROSSMONT HIGH SCHOOL
1100 MURRAY DR, EL CAJON, CA 92020
GROSSMONT UNION HIGH SCHOOL

PLUMBING KITCHEN FLOOR & ROOF PLAN

P2-2.2

1-30-55

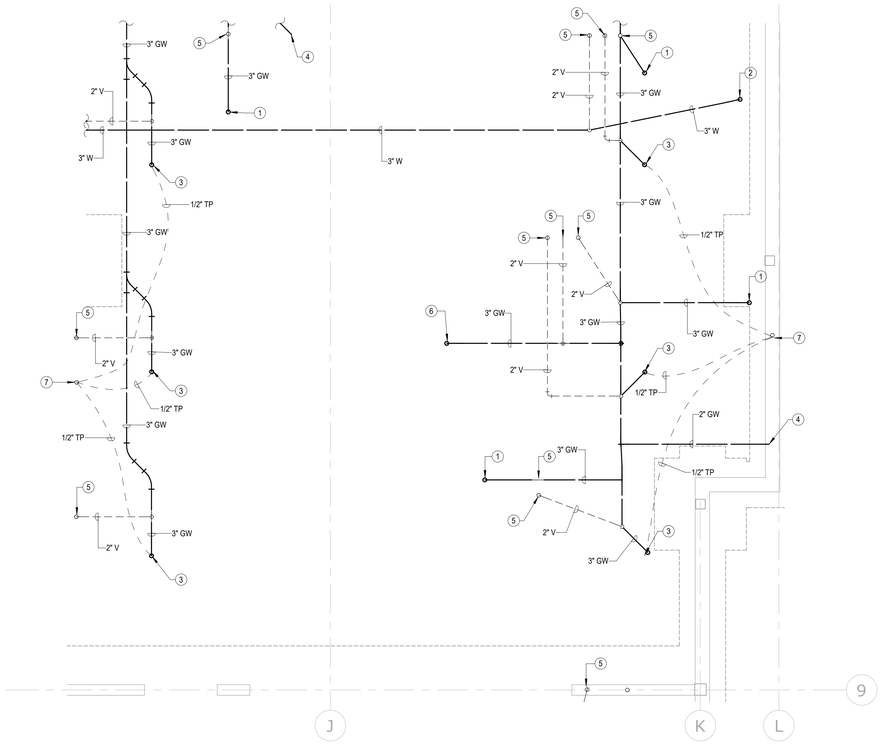

PLUMBING ENLARGED FOUNDATION PLAN - 402 SCALE: 3/8" = 1'-0" 3

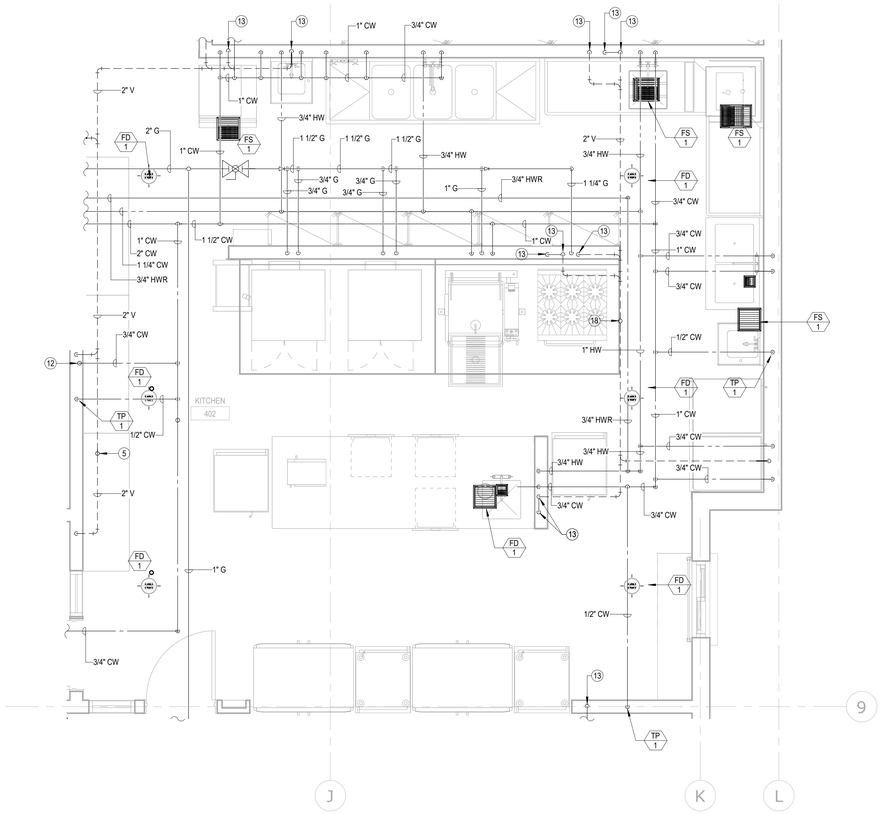

PLUMBING ENLARGED FOUNDATION PLAN - 402 SCALE: 3/8" = 1'-0" 4

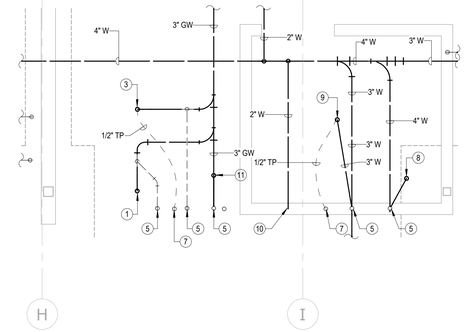

PLUMBING ENLARGED FOUNDATION PLAN - 406 & 407 SCALE: 3/8" = 1'-0" 1

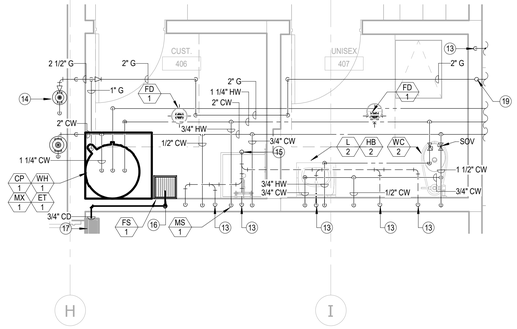

PLUMBING ENLARGED PLAN - 406 & 407 SCALE: 3/8" = 1'-0" 2

STAMPS

IDENTIFICATION STAMP
DIV. OF THE STATE ARCHITECT
APP: 04-120895 INC:
REVIEWED FOR
SS ☑ FLS ☑ ACS ☑
DATE: 06/27/2022

CONSULTANT BRANDING

MA ENGINEERS
5160 Carroll Canyon Rd, Suite 200
San Diego, California 92121
Consulting Mechanical Engineers
T: 858 200-0030 www.ma-engr.com

RUHNAU CLARKE ARCHITECTS

KEY NOTES:

#	
1	3" GREASE WASTE UP TO FLOOR SINK.
2	3" WASTE UP TO FLOOR SINK.
3	3" GREASE WASTE UP TO FLOOR DRAIN.
4	2" GREASE WASTE UP TO FIXTURE.
5	2" VENT UP.
6	3" GREASE WASTE UP.
7	1/2" CW UP TO TRAP PRIMER.
8	4" WASTE UP TO WATER CLOSET.
9	3" WASTE UP TO FLOOR DRAIN.
10	2" WASTE UP TO FIXTURE.
11	3" GREASE WASTE UP TO MOP SINK.
12	3/4" CW UP TO HOSE BIBB ON ROOF.
13	2" VENT DOWN.
14	GAS PRESSURE REGULATOR SEE DETAIL 1/P0-5.1.
15	2" VTR.
16	3/4" CONDENSATE DRAIN DOWN IN WALL AND DRAIN INDIRECT TO FLOOR SINK.
17	MECHANICAL EQUIPMENT SHOWN FOR REFERENCE ONLY. SEE MECHANICAL DRAWINGS (TYP.)
18	3" VTR.
19	1" GAS UP.

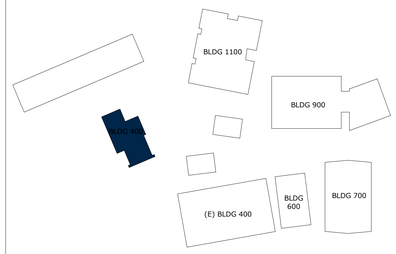

KEY PLAN NTS

GHS KITCHEN & WEIGHTROOM: 06/13/2022 DSA SUBMITTAL

PROJECT No. :1-30-55
6/20/2022 7:48:16 AM

DRAWN BY: CHECKED BY:

ISSUE No. DATE DESCRIPTION
ISSUE No. DATE DESCRIPTION
ISSUE No. DATE DESCRIPTION
ISSUE No. DATE DESCRIPTION
REVISION No. DATE DESCRIPTION
REVISION No. DATE DESCRIPTION
REVISION No. DATE DESCRIPTION
REVISION No. DATE DESCRIPTION

RUHNAUCLARKE.COM
3775 TENTH STREET, RIVERSIDE CALIFORNIA 92501 (951) 684 4664 / 5751 PALMER WAY, SUITE C, CARLSBAD CALIFORNIA 92010 (760) 438 5899

GHS KITCHEN & WEIGHTROOM
GROSSMONT HIGH SCHOOL
1100 MURRAY DR, EL CAJON, CA 92020
GROSSMONT UNION HIGH SCHOOL

PLUMBING ENLARGED PLANS

P2-3.1

1-30-55

ABBREVIATIONS

A	AMPERE (AMPS)
AC	ALTERNATING CURRENT
AF	AMPS-FRAME (RATING)
AIC	AMP INTERRUPTING CURRENT
AM	AMMETER
AS	AMP SWITCH (FUSED SWITCH RATING)
AT	AMPS-TRIP (RATING)
AWG	AMERICAN WIRE GAUGE
BC	BARE COPPER
BLDG	BUILDING
C	CONDUIT
CB	CIRCUIT BREAKER
CO	CONDUIT ONLY
CT	CURRENT TRANSFORMER
CU	COPPER
CFOI	CONTRACTOR FURNISHED OWNER INSTALLED
CFCI	CONTRACTOR FURNISHED CONTRACTOR INSTALLED
DPDT	DOUBLE POLE DOUBLE THROW
DPST	DOUBLE POLE SINGLE THROW
DWG	DRAWING
EX	EXISTING
FLA	FULL LOAD AMPS
FVR	FULL VOLTAGE REVERSING
FVNR	FULL VOLTAGE NON-REVERSING
GFI	GROUND FAULT INTERRUPTER
GRD/GND	GROUND
HID	HIGH INTENSITY DISCHARGE
HOA	HAND-OFF-AUTOMATIC
HP	HORSEPOWER
HPS	HIGH PRESSURE SODIUM
HZ	HERTZ
KW	KILOWATT
LCL	LONG CONTINUOUS LOAD
LRA	LOCKED ROTOR AMPS
LTG	LIGHTING
MCC	MOTOR CONTROL CENTER
MCM (KCM)	THOUSAND CIRCULAR MILS
MECH	MECHANICAL
NC	NORMALLY CLOSED
NF	NON-FUSED
NO	NORMALLY OPEN/NUMBER
OFCI	OWNER FURNISHED CONTRACTOR INSTALLED
OFOI	OWNER FURNISHED OWNER INSTALLED
P	POLE
PH	PHASE
POC	POINT OF CONNECTION
PRS	PVC COATED RIGID STEEL (CONDUIT)
PT	POTENTIAL TRANSFORMER
PVC	POLYVINYL CHLORIDE DUCT
SWBD	SWITCHBOARD
TYP	TYPICAL
UG	UNDERGROUND
UON	UNLESS OTHERWISE NOTED
V	VOLT
VA	VOLTAMPERES
VM	VOLTMETER
VL	VERIFY LOCATION
W	WIRE/WATTS
WP	WEATHERPROOF (NEMA TYPE 3R)
WT	WATERTIGHT
XP	EXPLOSION PROOF (RATED FOR AREA HAZARD)

ELECTRICAL SYMBOL LEGEND

LIGHTING

A	LIGHTING FIXTURE DESIGNATION
	LIGHTING FIXTURE, CEILING OR WALL MOUNTED AS SHOWN.
	LIGHT FIXTURE
	LIGHTING FIXTURE ON EMERGENCY CIRCUIT (LIGHTING INVERTER OR BATTERY PACK).
	EXIT SIGN WITH DIRECTION ARROWS AS INDICATED. SHADED QUADRANT INDICATES FACE.
b b	EMERGENCY LIGHTING UNIT. WALL MOUNTED 12" BELOW CEILING (U.O.N.) LETTER INDICATES CIRCUIT CONTROLLED. SEE DETAIL 5/E2.5
	STRIP LIGHT
Sa	SINGLE POLE SWITCH, SUBSCRIPT WHEN SHOWN INDICATES FIXTURES CONTROLLED +48" A.F.F. (U.O.N.) HEIGHT PER DETAILS #1/E1.0. WHERE USED IN CONJUCTION WITH OCCUPANCY SENSORS FOR SWITCH TYPE SEE DETAIL 3/E2.5
S3	THREE-WAY SWITCH +48" A.F.F. (U.O.N.) HEIGHT PER DETAILS #1/E1.0
S4	FOUR-WAY SWITCH +48" A.F.F. (U.O.N.) HEIGHT PER DETAILS #1/E1.0
SP	SWITCH WITH PILOT LIGHT +48" A.F.F. (U.O.N.) HEIGHT PER DETAILS #1/E1.0
S2	DOUBLE POLE SWITCH +48" A.F.F. (U.O.N.) HEIGHT PER DETAILS #1/E1.0
SWP	WEATHER PROOF SWITCH +48" A.F.F. (U.O.N.) HEIGHT PER DETAILS #1/E1.0
SK	KEY OPERATED SWITCH +48" A.F.F. (U.O.N.) HEIGHT PER DETAILS #1/E1.0
	SURFACE MOUNTED TRACK LIGHTING FIXTURES
	EXTERIOR SITE LIGHTING FIXTURE AND POLE
	EXTERIOR DECORATIVE SITE LIGHTING FIXTURE AND POLE
	LANDSCAPE LIGHTING FIXTURE
	SPORTSLIGHTING FIXTURES AND POLES
S ab	WALL MOUNTED OCCUPANCY SENSOR LIGHTING CONTROL +48" A.F.F. (U.O.N.) HEIGHT PER DETAILS #1/E1.0
S ab	CEILING MOUNTED (CORNER OF THE ROOM) OCCUPANCY SENSOR LIGHTING CONTROL 3/E2.5
S	CEILING MOUNTED OCCUPANCY SENSOR LIGHTING CONTROL 3/E2.5
S LV	LOW VOLTAGE LIGHT SWITCH. HEIGHT PER DETAILS #1/E1.0
A	DIGITAL LIGHTING CONTROL TYPICAL ROOM REQUIREMENTS. 1/E2.8
1	NUMBERED DEVICES ARE ADDITIONAL ITEMS SHOWN ON FLOOR PLAN IN ADDITION TO WHAT IS REQUIRED FOR THE TYPICAL ROOM REQUIREMENTS.
— —PZ— —	INDICATES PRIMARY DAYLIT ZONE
— —SZ— —	INCICATES SECONDARY DAYLIT ZONE

DISTRIBUTION EQUIPMENT

	DRAW OUT TYPE EQUIPMENT
	VACUUM CIRCUIT BREAKER, RATING AS NOTED.
	AIR INTERRUPTER SWITCH AND FUSE
	AIR INTERRUPTER
	FUSE
	POWER TRANSFORMER, RATING AS NOTED
	POWER CIRCUIT BREAKER DRAWOUT
	AUTOMATIC TRANSFER SWITCH. SEE SCHEDULE
A	AMMETER
V	VOLTMETER
	CIRCUIT BREAKER
200AF	200AMP FRAME
200AT	200AMP TRIP
3P	3 POLE
10,000AIC	10,000 AMPS INTERRUPTING CURRENT
	FUSED SWITCH
200AS	200AMP SWITCH
200AF	200AMP FUSE
3P	3 POLE
M	UTILITY COMPANY METER

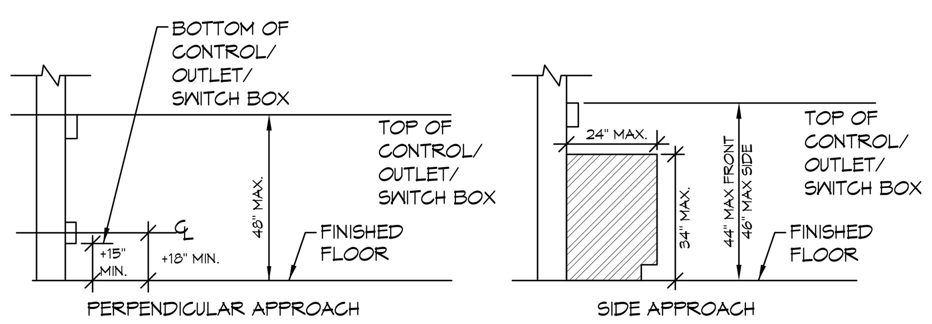

NOTE: MAINTAIN MINIMUM 30"X48" CLEAR FLOOR SPACE AT EACH APPROACH. FORWARD OR FRONT APPROACH FOR DEVICES MOUNTED ABOVE COUNTER ASSUMES THAT DIRECTLY BELOW THE DEVICE, THE COUNTER HAS A MINIMUM 30"W X 27"H X 19"D CLEAR OPENING.

MOUNTING HEIGHT OVER OBSTRUCTION (1/E1.0)

NO SCALE

POWER CONTINUED

	DUPLEX RECEPTACLE, FLOOR MOUNTED
	DUPLEX RECEPTACLE, WALL MOUNTED, +18" A.F.F. (U.O.N.)
HORZ.	RECEPTACLE, WALL MOUNTED HORIZONTALLY, +18" A.F.F. (U.O.N.)
	FOURPLEX RECEPTACLE, WALL MOUNTED, +18" A.F.F. (U.O.N.)
	RECEPTACLE MOUNTED +6" ABOVE COUNTER BACKSPLASH SEE ARCHITECTURAL PLANS FOR REQUIRED MOUNTING HEIGHT PRIOR TO ROUGH-IN.
LCD	PROVIDE (2) DUPLEX RECEPTACLE CEILING MOUNTED LOCATE ADJACENT TO PROJECTOR. FIELD VERIFY EXACT LOCATION PRIOR TO ROUGH-IN.
	SINGLE RECEPTACLE, WALL MOUNTED +18" A.F.F. (U.O.N.)
C	SINGLE RECEPTACLE (CLOCK HANGER TYPE) WALL MOUNTED +7'-0" A.F.F. (U.O.N.)
	SWITCH CONTROLLED DUPLEX RECEPTACLE +18" U.O.N.
a	CONTROLLED FOURPLEX RECEPTACLE +18" U.O.N. (1) DUPLEX, (1) HALF HOT CONTROLLED DUPLEX. SEE LIGHTING CONTROL DIAGRAMS FOR FURTHER INFO.
GFI	DUPLEX GROUND FAULT INTERRUPTING RECEPTACLE +18" A.F.F. (U.O.N.)
	DUPLEX RECEPTACLE ON EMERGENCY CIRCUIT +18" A.F.F. (U.O.N.)
WP	DUPLEX RECEPTACLE IN WEATHERPROOF ENCLOSURE +18" A.F.F. (U.O.N.)
WP/L	DUPLEX RECEPTACLE IN WEATHERPROOF "LOCKING" ENCLOSURE +18" A.F.F. (U.O.N.) (SEE TYPICAL DETAILS E3 SERIES SHEETS AND SPECIFICATIONS FOR REQUIRED TYPE).
IG	DUPLEX RECEPTACLE (ORANGE) ISOLATED GROUND WALL MOUNTED +18" A.F.F. (U.O.N.)
IG	FOURPLEX RECEPTACLE (ORANGE) ISOLATED GROUND WALL MOUNTED +18" A.F.F. (U.O.N.)
TP	DUPLEX RECEPTACLE SAFETY TYPE / TAMPER PROOF WALL MOUNTED +18" A.F.F. (U.O.N.)
	DUPLEX COMPUTER RECEPTACLE (GREY), WALL MOUNTED +18" A.F.F. (U.O.N.)
	DUPLEX COMPUTER RECEPTACLE (BLUE) ISOLATED GROUND, SURGE SUPPRESSION, WALL MOUNTED +18" A.F.F. (U.O.N.)
A	SINGLE RECEPTACLE 30 AMP, 250V, 4W, GROUNDING, WALL MOUNTED +18" A.F.F. (U.O.N.). FIELD VERIFY EXACT OUTLET CONFIGURATION WITH EQUIPMENT PRIOR TO ROUGH-IN.
B	SINGLE RECEPTACLE 50 AMP, 250V, 4W, GROUNDING, WALL MOUNTED +18" A.F.F. (U.O.N.). FIELD VERIFY EXACT OUTLET CONFIGURATION WITH EQUIPMENT PRIOR TO ROUGH-IN.
C	SINGLE RECEPTACLE 50 AMP, 250V, 3W, GROUNDING, WALL MOUNTED +18" A.F.F. (U.O.N.). FIELD VERIFY EXACT OUTLET CONFIGURATION WITH EQUIPMENT PRIOR TO ROUGH-IN.
E	SINGLE RECEPTACLE 30 AMP, 125V, 3W, GROUNDING, WALL MOUNTED +18" A.F.F. (U.O.N.). FIELD VERIFY EXACT OUTLET CONFIGURATION WITH EQUIPMENT PRIOR TO ROUGH-IN.
F	SINGLE RECEPTACLE 30 AMP, 250V, 3W, GROUNDING, WALL MOUNTED +18" A.F.F. (U.O.N.). FIELD VERIFY EXACT OUTLET CONFIGURATION WITH EQUIPMENT PRIOR TO ROUGH-IN.
G	SINGLE RECEPTACLE 30 AMP, 250V, 5W, GROUNDING, WALL MOUNTED +18" A.F.F. (U.O.N.). FIELD VERIFY EXACT OUTLET CONFIGURATION WITH EQUIPMENT PRIOR TO ROUGH-IN.
H	SINGLE RECEPTACLE 30 AMP, 480V, 5W, GROUNDING, WALL MOUNTED +18" A.F.F. (U.O.N.). FIELD VERIFY EXACT OUTLET CONFIGURATION WITH EQUIPMENT PRIOR TO ROUGH-IN.
S	SPECIAL PURPOSES AUTOSHOP EQUIPMENT RECEPTACLE. SEE KITCHEN PLANS FOR EXACT TYPE. FIELD VERIFY EXACT OUTLET CONFIGURATION/POWER CONNETION WITH EQUIPMENT SUPPLIER PRIOR TO ORDERING. SEE SNAP-ON PLANS FOR EXACT MOUNTING HEIGHT.
K	SPECIAL PURPOSES KITCHEN EQUIPMENT RECEPTACLE. SEE KITCHEN PLANS FOR EXACT TYPE. FIELD VERIFY EXACT OUTLET CONFIGURATION WITH EQUIPMENT SUPPLIER PRIOR TO ORDERING. SEE KITCHEN PLANS FOR EXACT MOUNTING HEIGHT.
FP	DUPLEX RECEPTACLE, WALL MOUNTED ADJACENT TO FLAT PANEL OUTLET, SEE SIGNAL PLAN FOR EXACT LOCATION.
CR	HEAVY GAUGE STEEL FRAME CORD REEL WITH 20A RECEPTACLE. REELCRAFT PART #L4545-123-9, 12/3 45' SO CORD.
	MULTI-OUTLET ASSEMBLY, "WIREMOLD" G-3000 SERIES WITH 20AMP DUPLEX RECEPTACLES ON 18" CENTERS, RECEPTACLES TO BE ALTERNATELY WIRED AND INSULATED GROUNDING CONDUCTOR PROVIDED TO EACH
J	JUNCTION BOX, FLOOR MOUNTED
J	JUNCTION BOX, CEILING OR WALL MOUNTED
HD	HAND DRYER CONNECTION, SEE ARCHITECTURAL FOR MOUNTING HEIGHT.
	FUSED DISCONNECT SWITCH, WHERE SHOWN NF = NON-FUSED.
S M	MANUAL MOTOR STARTER +48" A.F.F. OR ON EQUIPMENT (U.O.N.)
1	MOTOR CONNECTION, NUMERAL INDICATES HORSEPOWER.
AC 1	MECHANICAL EQUIPMENT TAG (SEE MECHANICAL DRAWINGS FOR DESCRIPTION)
	CONDUIT AND WIRE, CONCEALED IN CEILING OR WALL
	CONDUIT AND WIRE, CONCEALED IN OR UNDER FINISHED FLOOR OR UNDER FINISHED GRADE.
	FLEXIBLE CONDUIT CONNECTION
	BRANCH CIRCUIT HOMERUN TO PANEL. SLASHES INDICATE NUMBER OF CONDUCTORS. EQUIPMENT GROUND WIRE NOT INDICATED U.O.N. #12 CONDUCTORS ARE MINIMUM, NO HASH MARKS = MIN (2) #12
	3/4" CONDUIT STUBBED FROM DEVICE TO ABOVE ACCESSIBLE CEILING
#8	BRANCH CIRCUIT HOMERUN, NUMBER INDICATES INCREASED CONDUCTOR SIZE, CONDUCTORS SHALL REMAIN AS INDICATED FOR SIZE THROUGHOUT THE ENTIRE CIRCUIT.
	PANELBOARD, SURFACE MOUNTED.
	PANELBOARD, RECESSED
T	STEP-DOWN TRANSFORMER
	DISTRIBUTION SWITCHBOARD
—SR—	SURFACE MOUNTED RACEWAY SINGLE SECTION SERIES, NON METALLIC (WHITE)
—SR— 2	SURFACE MOUNTED RACEWAY TWO SECTION SERIES, NON METALLIC (WHITE)
—SR— 3	SURFACE MOUNTED RACEWAY THREE SECTION SERIES, NON METALLIC (WHITE)

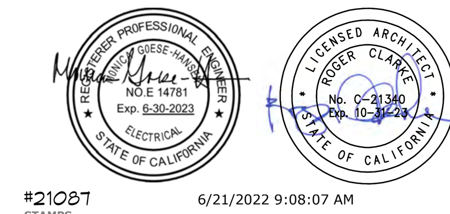

#21087 STAMPS 6/21/2022 9:08:07 AM

IDENTIFICATION STAMP
DIV. OF THE STATE ARCHITECT
APP: 04-120895 INC:
REVIEWED FOR
SS ☑ FLS ☑ ACS ☑
DATE: 06/27/2022

JOHNSON CONSULTING ENGINEERS, INC.
Power | Lighting | Multimedia
Communications | Data Networking
12875 Brookprinter Place, Suite 300
Poway, CA 92064
P 858.679.4030 | F 858.513.0559
www.jce-inc.com
CONSULTANT BRANDING

RUHNAU CLARKE ARCHITECTS

GENERAL PROJECT NOTES:

1. UNLESS WHERE OTHERWISE NOTED, ALL WORK INDICATED ON THESE DRAWINGS SHALL BE CONSIDERED NEW WORK.
2. UNLESS WHERE OTHERWISE NOTED, ALL DIMENSIONS ARE TO BE CENTERLINE OF THE DEVICE.
3. "GENERAL NOTES" SHOWN ON AN INDIVIDUAL DRAWING APPLY TO ALL WORK SHOWN ON THAT SHEET. "KEY NOTES" ONLY APPLY TO SPECIFIC ITEMS WHERE ANNOTATED AT SPECIFIC LOCATIONS. SOME KEY NOTES MAY NOT APPLY TO ANY SPECIFIC ITEMS.
4. FOR TWO STORY BUILDING CONSTRUCTION, NO CONDUITS SHALL BE ROUTED HORIZONTALLY WITHIN THE FLOOR SLAB OF THE SECOND FLOOR.
5. UNLESS SPECIFICALLY SHOWN ON THESE PLANS, NO STRUCTURAL MEMBER SHALL BE CUT, NEITHER DRILLED NOR NOTCHED WITHOUT PRIOR WRITTEN AUTHORIZATION FROM THE STRUCTURAL ENGINEER AND THE DIVISION OF THE STATE ARCHITECT.

GENERAL DEMOLITION NOTES:

1. ALL ELECTRICAL EQUIPMENT, EXPOSED RACEWAY AND CONDUIT, OUTLET BOXES AND RINGS, AND DEVICES ARE TO BE REMOVED, EXCEPT WHERE SHOWN TO REMAIN. EXISTING WIRING, WHETHER EXPOSED, IN CONDUIT OR RACEWAY IS TO BE REMOVED TO THE GREATEST EXTENT POSSIBLE.
2. THE ELECTRICAL CONTRACTOR IS TO DIRECT THE REMOVAL OF THE ABOVE LISTED WORK.

MEP COMPONENT ANCHORAGE NOTE:

ALL MECHANICAL, PLUMBING, AND ELECTRICAL COMPONENTS SHALL BE ANCHORED AND INSTALLED PER THE DETAILS ON THE DSA- APPROVED CONSTRUCTION DOCUMENTS. THE FOLLOWING COMPONENTS SHALL BE ANCHORED OR BRACED TO MEET THE FORCE AND DISPLACEMENT REQUIREMENTS PRESCRIBED IN THE 2019 CBC SECTIONS 1617A.1.18 THROUGH 1617A.1.26 AND ASCE 7- 16 CHAPTERS 13, 26, AND 30:

1. ALL PERMANENT EQUIPMENT AND COMPONENTS.
2. TEMPORARY, MOVABLE OR MOBILE EQUIPMENT THAT IS PERMANENTLY ATTACHED (E.G. HARD WIRED) TO THE BUILDING UTILITY SERVICES SUCH AS ELECTRICITY, GAS OR WATER. "PERMANENTLY ATTACHED" SHALL INCLUDE ALL ELECTRICAL CONNECTIONS EXCEPT PLUGS FOR 110/220 VOLT RECEPTACLES HAVING A FLEXIBLE CABLE.
3. TEMPORARY, MOVABLE OR MOBILE EQUIPMENT WHICH IS HEAVIER THAN 400 POUNDS OR HAS A CENTER OF MASS LOCATED 4 FEET OR MORE ABOVE THE ADJACENT FLOOR OR ROOF LEVEL THAT DIRECTLY SUPPORT THE COMPONENT IS REQUIRED TO BE RESTRAINED IN A MANNER APPROVED BY DSA.

THE FOLLOWING MECHANICAL AND ELECTRICAL COMPONENTS SHALL BE POSITIVELY ATTACHED TO THE STRUCTURE BUT NEED NOT DEMONSTRATE DESIGN COMPLIANCE WITH THE REFERENCES NOTED ABOVE. THESE COMPONENTS SHALL HAVE FLEXIBLE CONNECTIONS PROVIDED BETWEEN THE COMPONENT AND ASSOCIATED DUCTWORK, PIPING, AND CONDUIT. FLEXIBLE CONNECTIONS MUST ALLOW MOVEMENT IN BOTH TRANSVERSE AND LONGITUDINAL DIRECTIONS:

A. COMPONENTS WEIGHING LESS THAN 400 POUNDS AND HAVING A CENTER OF MASS LOCATED 4 FEET OR LESS ABOVE THE ADJACENT FLOOR OR ROOF LEVEL THAT DIRECTLY SUPPORT THE COMPONENT.
B. COMPONENTS WEIGHING LESS THAN 20 POUNDS, OR IN THE CASE OF DISTRIBUTED SYSTEMS, LESS THAN 5 POUNDS PER FOOT, WHICH ARE SUSPENDED FROM A ROOF OR FLOOR OR HUNG FROM A WALL.

THE ANCHORAGE OF ALL MECHANICAL, ELECTRICAL AND PLUMBING COMPONENTS SHALL BE SUBJECT TO THE APPROVAL OF THE DESIGN PROFESSIONAL IN GENERAL RESPONSIBLE CHARGE OR STRUCTURAL ENGINEER DELEGATED RESPONSIBILITY AND ACCEPTANCE BY DSA. THE PROJECT INSPECTOR WILL VERIFY THAT ALL COMPONENTS AND EQUIPMENT HAVE BEEN ANCHORED IN ACCORDANCE WITH THE ABOVE REQUIREMENTS.

PIPING, DUCTWORK, AND ELECTRICAL DISTRIBUTION SYSTEM BRACING NOTE

PIPING, DUCTWORK, AND ELECTRICAL DISTRIBUTION SYSTEMS SHALL BE BRACED TO COMPLY WITH THE FORCES AND DISPLACEMENTS PRESCRIBED IN ASCE 7-16 SECTION 13.3 AS DEFINED IN ASCE 7-16 SECTIONS 13.6.5, 13.6.6, 13.6.7, 13.6.8; AND 2019 CBC, SECTIONS 1617A.1.24, 1617A.1.25 AND 1617A.1.26.
THE METHOD OF SHOWING BRACING AND ATTACHMENTS TO THE STRUCTURE FOR THE IDENTIFIED DISTRIBUTION SYSTEM ARE AS NOTED BELOW. WHEN BRACING AND ATTACHMENTS ARE BASED ON A PREAPPROVED INSTALLATION GUIDE (E.G., OSHPD OPM FOR 2013 CBC OR LATER), COPIES OF THE BRACING SYSTEM INSTALLATION GUIDE OR MANUAL SHALL BE AVAILABLE ON THE JOBSITE PRIOR TO THE START OF AND DURING THE HANGING AND BRACING OF THE DISTRIBUTION SYSTEMS. THE STRUCTURAL ENGINEER OF RECORD SHALL VERIFY THE ADEQUACY OF THE STRUCTURE TO SUPPORT THE HANGER AND BRACE LOADS.
MECHANICAL PIPING (MP), MECHANICAL DUCTS (MD), PLUMBING PIPING (PP), ELECTRICAL DISTRIBUTION SYSTEMS (E):

MP☐ MD☐ PP☐ E☐ - OPTION 1: DETAILED ON THE APPROVED DRAWINGS WITH PROJECT SPECIFIC NOTES AND DETAILS.

MP☐ MD☐ PP☐ E■ - OPTION 2: SHALL COMPLY WITH THE APPLICABLE OSHPD PRE-APPROVED (OPM#) # 0052-13

FIRE RATED ASSEMBLIES NOTE:

1. REFER TO ARCHITECTURAL DRAWINGS FOR EXACT DESCRIPTION AND DETAIL OF ALL FIRE RATED ASSEMBLIES.

PROJECT No. :1-30-55
6/21/2022 9:08:07 AM

DRAWN BY: CHECKED BY:
ISSUE No.___ DATE___ DESCRIPTION___ (x4)
REVISION No.___ DATE___ DESCRIPTION___ (x4)

RUHNAUCLARKE.COM
3775 TENTH STREET, RIVERSIDE CALIFORNIA 92501 (951) 684 4664 / 5751 PALMER WAY, SUITE C, CARLSBAD CALIFORNIA 92010 (760) 438 5899

GHS KITCHEN & WEIGHTROOM MOD
GROSSMONT HIGH SCHOOL
1100 MURRAY DR, EL CAJON, CA 92020
GROSSMONT UNION HIGH SCHOOL

ELECTRICAL SYMBOLS, ABBREVIATIONS & NOTES

E1.0

1-30-55

GHS KITCHEN & WEIGHTROOM MOD:

OVERALL SITE PLAN | SCALE: 1" = 20'-0" | REF.: / | 1

PROJECT No. :1-30-55
6/21/2022 9:08:13 AM

DRAWN BY: CHECKED BY:

ISSUE No.	DATE	DESCRIPTION	REVISION No.	DATE	DESCRIPTION
ISSUE No.	DATE	DESCRIPTION	REVISION No.	DATE	DESCRIPTION
ISSUE No.	DATE	DESCRIPTION	REVISION No.	DATE	DESCRIPTION
ISSUE No.	DATE	DESCRIPTION	REVISION No.	DATE	DESCRIPTION

RUHNAUCLARKE.COM

3775 TENTH STREET, RIVERSIDE CALIFORNIA 92501 (951) 684 4664 / 5751 PALMER WAY, SUITE C, CARLSBAD CALIFORNIA 92010 (760) 438 5899

GHS KITCHEN & WEIGHTROOM MOD
GROSSMONT HIGH SCHOOL
1100 MURRAY DR, EL CAJON, CA 92020
GROSSMONT UNION HIGH SCHOOL

#21087
STAMPS
6/21/2022 9:08:13 AM

IDENTIFICATION STAMP
DIV. OF THE STATE ARCHITECT
APP: 04-120895 INC:
REVIEWED FOR
SS ☑ FLS ☑ ACS ☑
DATE: 06/27/2022
FOR DSA USE ONLY

JOHNSON
CONSULTING ENGINEERS, INC.
Power | Lighting | Multimedia
Communications | Data Networking
12875 Brookprinter Place, Suite 300
Poway, CA 92064
P 858.679.4030 | F 858.513.0559
www.jce-inc.com
CONSULTANT BRANDING

RUHNAU
CLARKE
ARCHITECTS

GENERAL NOTES:

1. FURNISH AND INSTALL ALL UTILITY CO. SERVICES TO THE SITE TO COMPLY WITH LOCAL UTILITY CO. REQUIREMENTS. VERIFY ALL REQUIREMENTS PRIOR TO INSTALLATION.

KEY NOTES:

1. PROVIDE CONDUIT FOR FUTURE NEW PRESS BOX. STUB AND CAP CONDUITS BELOW GRADE.
2. SEE FLOOR PLANS FOR EQUIPMENT/IDF ROOM REQUIREMENTS
3. REPLACE EXISTING MAIN SECURITY CONTROL PANEL IN THE EXISTING CAMPUS MDF ROOM IN OLD GYM/AUDITORIUM. REFER TO THE SPECIFICATIONS FOR REQUIREMENTS. CAMPUS SECURITY IN AREAS CONNECTED TO SECURITY CONTROL PANEL SHALL NOT LOSE PROTECTION AT ANY TIME AFTER SCHOOL HOURS.

GHS KITCHEN & WEIGHTROOM MOD:

OVERALL SITE PLAN

E1.1

1-30-55

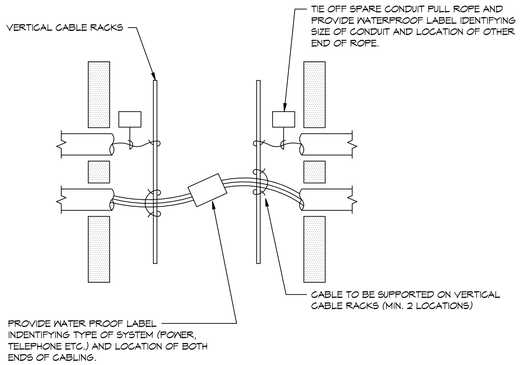

TYPICAL UNDERGROUND PULLBOX LABELING/SUPPORT DETAIL (1 / E1.2)
NO SCALE

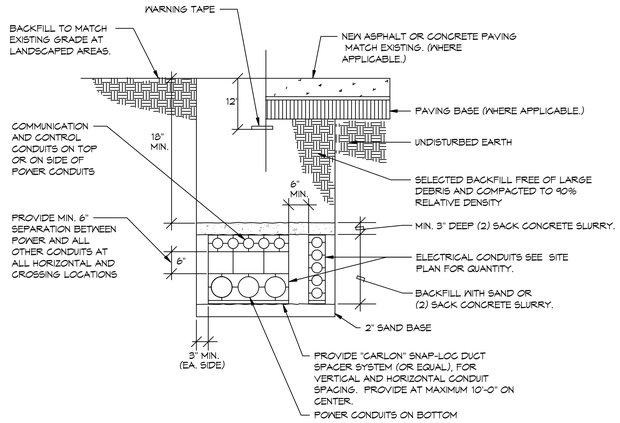

TYPICAL TRENCH DETAIL (2 / E1.2)
NO SCALE

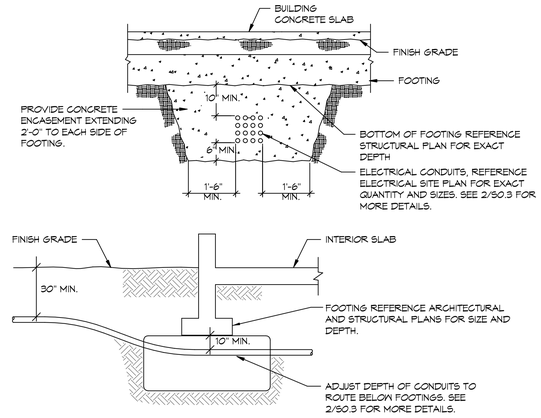

UNDERGROUND CONDUIT - INSTALLATION AT BUILDING FOOTING (3 / E1.2)
NO SCALE

#21087
STAMPS
6/21/2022 9:08:15 AM

IDENTIFICATION STAMP
DIV. OF THE STATE ARCHITECT
APP: 04-120895 INC:
REVIEWED FOR
SS ☑ FLS ☑ ACS ☑
DATE: 06/27/2022

JOHNSON CONSULTING ENGINEERS, INC.
Power | Lighting | Multimedia
Communications | Data Networking
12875 Brookprinter Place, Suite 300
Poway, CA 92064
P 858.679.4030 | F 858.513.0559
www.jce-inc.com
CONSULTANT BRANDING

RUHNAU CLARKE ARCHITECTS

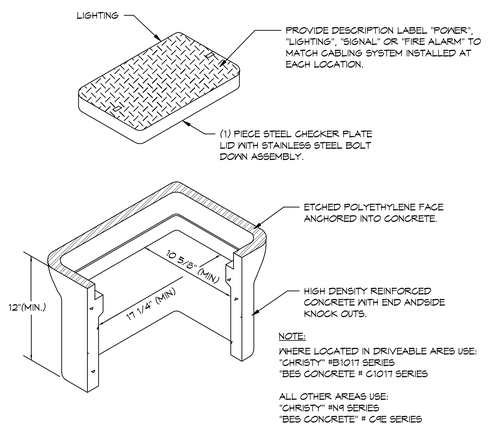

NOTE:
WHERE LOCATED IN DRIVEABLE ARES USE:
"CHRISTY" #B1017 SERIES
"BES CONCRETE # C1017 SERIES

ALL OTHER AREAS USE:
"CHRISTY" #N9 SERIES
"BES CONCRETE" # C9E SERIES

UNDERGROUND PULLBOX STYLE 'A' (5 / E1.2)
NO SCALE

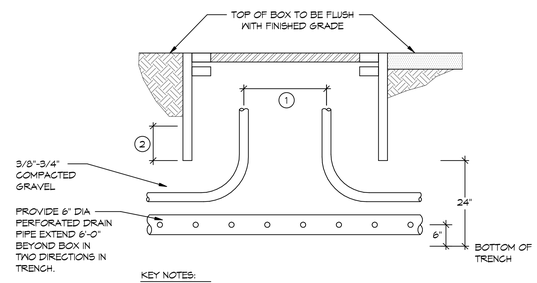

KEY NOTES:

1. WHERE CONDUITS SERVE INCOMING AND OUTGOING CIRCUITS KEEP RISERS SEPARATED INSIDE PULLBOX TO ALLOW FOR SLACK CONDUCTORS.
2. TOPS OF CONDUITS MUST NOT EXTEND INTO PULLBOX MORE THAN 1/3 OF THE TOTAL AVAILABLE INSIDE BOX HEIGHT. IN ORDER TO ALLOW ADEQUATE SPACE FOR CABLE SLACK.

UNDERGROUND PULLBOX STYLE 'A' OR 'B' TYP. INSTALLATION (6 / E1.2)
NO SCALE

GHS KITCHEN & WEIGHTROOM MOD:

PROJECT No. :1-30-55
6/21/2022 9:08:15 AM

DRAWN BY: CHECKED BY:
ISSUE No.____ DATE____ DESCRIPTION____
ISSUE No.____ DATE____ DESCRIPTION____
ISSUE No.____ DATE____ DESCRIPTION____
ISSUE No.____ DATE____ DESCRIPTION____
REVISION No.____ DATE____ DESCRIPTION____
REVISION No.____ DATE____ DESCRIPTION____
REVISION No.____ DATE____ DESCRIPTION____
REVISION No.____ DATE____ DESCRIPTION____

RUHNAUCLARKE.COM
3775 TENTH STREET, RIVERSIDE CALIFORNIA 92501(951) 684 4664 / 5751 PALMER WAY, SUITE C, CARLSBAD CALIFORNIA 92010(760) 438 5899

GHS KITCHEN & WEIGHTROOM MOD
GROSSMONT HIGH SCHOOL
1100 MURRAY DR, EL CAJON, CA 92020
GROSSMONT UNION HIGH SCHOOL

SITE ELECTRICAL DETAILS

E1.2

1-30-55

STATE OF CALIFORNIA
Indoor Lighting
NRCC-LTI-E (Created 01/20) — CALIFORNIA ENERGY COMMISSION

CERTIFICATE OF COMPLIANCE — NRCC-LTI-E

This document is used to demonstrate compliance with requirements in §110.9, §110.12(c), §130.0, §130.1, §140.6, and §141.0(b)2 for indoor lighting scopes using the prescriptive path.

Project Name:	Grossmont HS Weight Room Building	Report Page:	Page 1 of 6
Project Address:	1100 Murray Dr., El Cajon, CA 92020	Date Prepared:	2-25-2022

A. GENERAL INFORMATION

01	Project Location (city)	Encinitas	04	Total Conditioned Floor Area (ft²)	7,100
02	Climate Zone	10	05	Total Unconditioned Floor Area (ft²)	0
03	Occupancy Types Within Project (select all that apply):		06	# of Stories (Habitable Above Grade)	1

☐ Office ☐ Retail ☐ Warehouse ☐ Hotel/Motel ☑ School ☐ Support Areas
☐ Parking Garage ☐ High-Rise Residential ☐ Relocatable ☐ Healthcare ☐ Other (write in):

B. PROJECT SCOPE

Table Instructions: Include any lighting systems that are within the scope of the permit application and are demonstrating compliance using the prescriptive path outlined in §140.6 or §141.0(b)2 for alterations. WARNING: Changing the Calculation Method in this table will result in the deletion of data previously input. If you need to change the calculation method, please open a new form or use "Save As".

Scope of Work	Conditioned Spaces		Unconditioned Spaces	
01	02	03	04	05
My Project Consists of (check all that apply):	Calculation Method	Area (ft²)	Calculation Method	Area (ft²)
☑ New Lighting System	Complete Building	7,100		
☐ Altered Lighting System				
Total Area of Work (ft²)	7,100			

C. COMPLIANCE RESULTS

Table Instructions: If any cell on this table says "DOES NOT COMPLY" or "COMPLIES with Exceptional Conditions" refer to Table D. for guidance.

Lighting in conditioned and unconditioned spaces must not be combined for compliance per §140.6(b)1.	01 Complete Building §140.6(c)1	02 Area Category §140.6(c)2	03 Area Category Additional §140.6(c)2G (+)	04 Tailored §140.6(c)3 (+)	=	05 Total Allowed (Watts)	≥	06 Total Designed (Watts)	07 Adjustments PAF Control Credits §140.6(a)2 (-)	=	08 Total Adjusted (Watts) *Includes Adjustments	09 Compliance Results: 05 Must be ≥ 08 §140.6
	(See Table I)	(See Table I)	(See Table J)	(See Table K)				(See Table F)	(See Table P)			
Conditioned:	4,615				=	4,615	≥	4,264		=	4,264	COMPLIES
Unconditioned:					=		≥			=		

Table Continued

STATE OF CALIFORNIA
Indoor Lighting
NRCC-LTI-E (Created 01/20) — CALIFORNIA ENERGY COMMISSION

CERTIFICATE OF COMPLIANCE — NRCC-LTI-E

Project Name:	Grossmont HS Weight Room Building	Report Page:	Page 2 of 6
Project Address:	1100 Murray Dr., El Cajon, CA 92020	Date Prepared:	2-25-2022

Controls Compliance (See Table H for Details)	
Rated Power Reduction Compliance (See Table Q for Details)	Not Applicable

D. EXCEPTIONAL CONDITIONS

This table is auto-filled with uneditable comments because of selections made or data entered in tables throughout the form.

Selections made in Table U have been changed by the permit applicant. See Table E. Additional Remarks for permit applicant's explanation.

E. ADDITIONAL REMARKS

This table includes remarks made by the permit applicant to the Authority Having Jurisdiction.

F. INDOOR LIGHTING FIXTURE SCHEDULE

Table Instructions: Include all permanent designed lighting and all portable lighting in offices.

Designed Wattage: Conditioned Spaces

01 Name or Item Tag	02 Complete Luminaire Description	03 Modular (Track) Fixture	04 Small Aperture & Color Change[1]	05 Watts per luminaire[2]	06 How Wattage is determined	07 Total number luminaires	08 Exempt per §140.6(a)3	09 Design Watts	10 Field Inspector Pass	Fail
A1,A1E	2X4 LED GRID	☐	☐	46	Mfr. Spec[2]	6	☐	276	☐	☐
A2, A2E	2X2 LED GRID	☐	☐	46	Mfr. Spec[2]	52	☐	2,392	☐	☐
C	1X4 RETROFIT	☐	☐	38	Mfr. Spec[2]	42	☐	1,596	☐	☐
						Total Designed Watts CONDITIONED SPACES:		4,264		

[1] *FOOTNOTE: Design Watts for small aperture and color changing luminaires which qualify per §140.6(a)4B is adjusted to be 75% of their rated wattage. Table F automatically makes this adjustment, the permit applicant should enter full rated wattage in column 05.*
[2] *Authority Having Jurisdiction may ask for Luminaire cut sheets to confirm wattage used for compliance per §130.0(c) Wattage used must be the maximum rated for the luminaire, not the lamp.*

G. MODULAR LIGHTING SYSTEMS

This Section Does Not Apply

STATE OF CALIFORNIA
Indoor Lighting
NRCC-LTI-E (Created 01/20) — CALIFORNIA ENERGY COMMISSION

CERTIFICATE OF COMPLIANCE — NRCC-LTI-E

Project Name:	Grossmont HS Weight Room Building	Report Page:	Page 3 of 6
Project Address:	1100 Murray Dr., El Cajon, CA 92020	Date Prepared:	2-25-2022

H. INDOOR LIGHTING CONTROLS (Not Including PAFs)

This Section Does Not Apply

I. LIGHTING POWER ALLOWANCE: COMPLETE BUILDING OR AREA CATEGORY METHODS

Table Instructions: Complete the table for each area complying using the Complete Building or Area Category Methods per §140.6(b). Indicate if additional lighting power allowances per §140.6(c) or adjustments per §140.6(a) are being used.

Conditioned Spaces

01 Area Description	02 Complete Building or Area Category Primary Function Area	03 Allowed Density (W/ft²)	04 Area (ft²)	05 Allowed Wattage (Watts)	06 Additional Allowances / Adjustment: Area Category	PAF
	School Building	0.65	7,100	4,615	☐	☐
		TOTAL:	7,100	4,615	See Tables J or P for detail	

J. ADDITIONAL LIGHTING ALLOWANCE: AREA CATEGORY METHOD QUALIFYING LIGHTING SYSTEM

This Section Does Not Apply

K. TAILORED METHOD GENERAL LIGHTING POWER ALLOWANCE

This Section Does Not Apply

L. ADDITIONAL LIGHTING ALLOWANCE: TAILORED WALL DISPLAY

This Section Does Not Apply

M. ADDITIONAL LIGHTING ALLOWANCE: TAILORED FLOOR AND TASK LIGHTING

This Section Does Not Apply

N. ADDITIONAL LIGHTING ALLOWANCE: TAILORED ORNAMENTAL/SPECIAL EFFECTS

This Section Does Not Apply

O. ADDITIONAL LIGHTING ALLOWANCE: TAILORED VERY VALUABLE MERCHANDISE

This Section Does Not Apply

STATE OF CALIFORNIA
Indoor Lighting
NRCC-LTI-E (Created 01/20) — CALIFORNIA ENERGY COMMISSION

CERTIFICATE OF COMPLIANCE — NRCC-LTI-E

Project Name:	Grossmont HS Weight Room Building	Report Page:	Page 4 of 6
Project Address:	1100 Murray Dr., El Cajon, CA 92020	Date Prepared:	2-25-2022

P. POWER ADJUSTMENT: LIGHTING CONTROL CREDIT (POWER ADJUSTMENT FACTOR (PAF))

This Section Does Not Apply

Q. RATED POWER REDUCTION COMPLIANCE FOR ALTERATIONS

This Section Does Not Apply

R. 80% LIGHTING POWER FOR ALTERATIONS - CONTROLS EXCEPTIONS

This Section Does Not Apply

S. DAYLIGHT DESIGN POWER ADJUSTMENT FACTOR (PAF)

This Section Does Not Apply

T. DECLARATION OF REQUIRED CERTIFICATES OF INSTALLATION

Table Instructions: Selections have been made based on information provided in previous tables of this document. If any selection needs to be changed, please explain why in Table E. Additional Remarks. These documents must be provided to the building inspector during construction and can be found online at https://ww2.energy.ca.gov/title24/2019standards/2019_compliance_documents/Nonresidential_Documents/NRCI/

YES	NO	Form/Title	Field Inspector Pass	Fail
◉	○	NRCI-LTI-01-E - Must be submitted for all buildings	☐	☐
○	◉	NRCI-LTI-02-E - Must be submitted for a lighting control system, or for an Energy Management Control System (EMCS), to be recognized for compliance.	☐	☐
○	◉	NRCI-LTI-04-E - Must be submitted for two interlocked systems serving an auditorium, a convention center, a conference room, a multipurpose room, or a theater to be recognized for compliance.	☐	☐
○	◉	NRCI-LTI-05-E - Must be submitted for a Power Adjustment Factor (PAF) to be recognized for compliance.	☐	☐
○	◉	NRCI-LTI-06-E - Must be submitted for additional wattage installed in a video conferencing studio to be recognized for compliance.	☐	☐

REGISTERED PROFESSIONAL ENGINEER — MONICA GOESE-HANSEN — NO.E 14781 — Exp. 6-30-2023 — ELECTRICAL — STATE OF CALIFORNIA

LICENSED ARCHITECT — ROGER CLARKE — No. C-21340 — Exp. 10-31-23 — STATE OF CALIFORNIA

#21087
STAMPS
6/21/2022 9:08:16 AM

IDENTIFICATION STAMP
DIV. OF THE STATE ARCHITECT
APP: 04-120895 INC:
REVIEWED FOR
SS ☑ FLS ☑ ACS ☑
DATE: 06/27/2022

JOHNSON CONSULTING ENGINEERS, INC.
Power | Lighting | Multimedia
Communications | Data Networking
12875 Brookprinter Place, Suite 300
Poway, CA 92064
P 858.679.4030 | F 858.513.0559
www.jce-inc.com
CONSULTANT BRANDING

RUHNAU CLARKE ARCHITECTS

STATE OF CALIFORNIA
Indoor Lighting
NRCC-LTI-E (Created 01/20) — CALIFORNIA ENERGY COMMISSION

CERTIFICATE OF COMPLIANCE — NRCC-LTI-E

Project Name:	Grossmont HS Weight Room Building	Report Page:	Page 5 of 6
Project Address:	1100 Murray Dr., El Cajon, CA 92020	Date Prepared:	2-25-2022

U. DECLARATION OF REQUIRED CERTIFICATES OF ACCEPTANCE

Table Instructions: Selections have been made based on information provided in previous tables of this document. If any selection needs to be changed, please explain why in Table E. Additional Remarks. These documents must be provided to the building inspector during construction and any with "-A" in the form name must be completed through an Acceptance Test Technician Certification Provider (ATTCP). For more information visit: http://www.energy.ca.gov/title24/attcp/providers.html

YES	NO	Form/Title	Field Inspector Pass	Fail
◉	○	NRCA-LTI-02-A - Must be submitted for occupancy sensors and automatic time switch controls.	☐	☐
◉	○	NRCA-LTI-03-A - Must be submitted for automatic daylight controls.	☐	☐
○	◉	NRCA-LTI-04-A - Must be submitted for demand responsive lighting controls.	☐	☐
○	◉	NRCA-LTI-05-A - Must be submitted for institutional tuning power adjustment factor (PAF).	☐	☐
○	◉	NRCA-ENV-03-F - Must be submitted for daylighting design power adjustment factors (PAF).	☐	☐

STATE OF CALIFORNIA
Indoor Lighting
NRCC-LTI-E (Created 01/20) — CALIFORNIA ENERGY COMMISSION

CERTIFICATE OF COMPLIANCE — NRCC-LTI-E

Project Name:	Grossmont HS Weight Room Building	Report Page:	Page 6 of 6
Project Address:	1100 Murray Dr., El Cajon, CA 92020	Date Prepared:	2-25-2022

DOCUMENTATION AUTHOR'S DECLARATION STATEMENT

I certify that this Certificate of Compliance documentation is accurate and complete

Documentation Author Name:	Monica Hansen	Documentation Author Signature:	[signature]
Company:	Johnson Consulting Engineers, Inc	Signature Date:	2-25-2022
Address:	12875 Brookprinter Place Suite 300	CEA/ HERS Certification Identification (if applicable):	E14781
City/State/Zip:	Poway/CA/92064	Phone:	858-679-4030

RESPONSIBLE PERSON'S DECLARATION STATEMENT

I certify the following under penalty of perjury, under the laws of the State of California:
1. **The information provided on this Certificate of Compliance is true and correct.**
2. **I am eligible under Division 3 of the Business and Professions Code to accept responsibility for the building design or system design identified on this Certificate of Compliance (responsible designer)**
3. **The energy features and performance specifications, materials, components, and manufactured devices for the building design or system design identified on this Certificate of Compliance conform to the requirements of Title 24, Part 1 and Part 6 of the California Code of Regulations.**
4. **The building design features or system design features identified on this Certificate of Compliance are consistent with the information provided on other applicable compliance documents, worksheets, calculations, plans and specifications submitted to the enforcement agency for approval with this building permit application.**
5. **I will ensure that a completed signed copy of this Certificate of Compliance shall be made available with the building permit(s) issued for the building, and made available to the enforcement agency for all applicable inspections. I understand that a completed signed copy of this Certificate of Compliance is required to be included with the documentation the builder provides to the building owner at occupancy.**

Responsible Designer Name:	Monica Hansen	Responsible Designer Signature:	[signature]
Company :	Johnson Consulting Engineers, Inc	Date Signed:	2-25-2022
Address:	12875 Brookprinter Place Suite 300	License:	E14781
City/State/Zip:	Poway/CA/92064	Phone:	858-679-4030

STATE OF CALIFORNIA
Indoor Lighting
NRCC-LTI-E (Created 01/20) — CALIFORNIA ENERGY COMMISSION

CERTIFICATE OF COMPLIANCE — NRCC-LTI-E

This document is used to demonstrate compliance with requirements in §110.9, §110.12(c), §130.0, §130.1, §140.6, and §141.0(b)2 for indoor lighting scopes using the prescriptive path.

Project Name:	Grossmont HS Kitchen Building	Report Page:	Page 1 of 6
Project Address:	1100 Murray Dr. El Cajon, CA 92020	Date Prepared:	2-25-2022

A. GENERAL INFORMATION

01	Project Location (city)	El Cajon	04	Total Conditioned Floor Area (ft²)	7,100
02	Climate Zone	10	05	Total Unconditioned Floor Area (ft²)	0
03	Occupancy Types Within Project (select all that apply):		06	# of Stories (Habitable Above Grade)	1

☐ Office ☐ Retail ☐ Warehouse ☐ Hotel/Motel ☑ School ☐ Support Areas
☐ Parking Garage ☐ High-Rise Residential ☐ Relocatable ☐ Healthcare ☐ Other (write in):

B. PROJECT SCOPE

Table Instructions: Include any lighting systems that are within the scope of the permit application and are demonstrating compliance using the prescriptive path outlined in §140.6 or §141.0(b)2 for alterations. WARNING: Changing the Calculation Method in this table will result in the deletion of data previously input. If you need to change the calculation method, please open a new form or use "Save As".

Scope of Work	Conditioned Spaces		Unconditioned Spaces	
01	02	03	04	05
My Project Consists of (check all that apply):	Calculation Method	Area (ft²)	Calculation Method	Area (ft²)
☑ New Lighting System	Complete Building	7,100		
☐ Altered Lighting System				
Total Area of Work (ft²)	7,100			

C. COMPLIANCE RESULTS

Table Instructions: If any cell on this table says "DOES NOT COMPLY" or "COMPLIES with Exceptional Conditions" refer to Table D. for guidance.

Lighting in conditioned and unconditioned spaces must not be combined for compliance per §140.6(b)1.	01 Complete Building §140.6(c)1	02 Area Category §140.6(c)2	03 Area Category Additional §140.6(c)2G (+)	04 Tailored §140.6(c)3 (+)	=	05 Total Allowed (Watts)	≥	06 Total Designed (Watts)	07 Adjustments PAF Control Credits §140.6(a)2 (-)	=	08 Total Adjusted (Watts) *Includes Adjustments	09 Compliance Results: 05 Must be ≥ 08 §140.6
	(See Table I)	(See Table I)	(See Table J)	(See Table K)				(See Table F)	(See Table P)			
Conditioned:	4,615				=	4,615	≥	4,264		=	4,264	COMPLIES
Unconditioned:					=		≥			=		

Table Continued

STATE OF CALIFORNIA
Indoor Lighting
NRCC-LTI-E (Created 01/20) — CALIFORNIA ENERGY COMMISSION

CERTIFICATE OF COMPLIANCE — NRCC-LTI-E

Project Name:	Grossmont HS Kitchen Building	Report Page:	Page 2 of 6
Project Address:	1100 Murray Dr. El Cajon, CA 92020	Date Prepared:	2-25-2022

Controls Compliance (See Table H for Details)	
Rated Power Reduction Compliance (See Table Q for Details)	Not Applicable

D. EXCEPTIONAL CONDITIONS

This table is auto-filled with uneditable comments because of selections made or data entered in tables throughout the form.

Selections made in Table U have been changed by the permit applicant. See Table E. Additional Remarks for permit applicant's explanation.

E. ADDITIONAL REMARKS

This table includes remarks made by the permit applicant to the Authority Having Jurisdiction.

F. INDOOR LIGHTING FIXTURE SCHEDULE

Table Instructions: Include all permanent designed lighting and all portable lighting in offices.

Designed Wattage: Conditioned Spaces

01 Name or Item Tag	02 Complete Luminaire Description	03 Modular (Track) Fixture	04 Small Aperture & Color Change[1]	05 Watts per luminaire[2]	06 How Wattage is determined	07 Total number luminaires	08 Exempt per §140.6(a)3	09 Design Watts	10 Field Inspector Pass	Fail
A1,A1E	2X4 LED GRID	☐	☐	46	Mfr. Spec[2]	6	☐	276	☐	☐
A2, A2E	2X2 LED GRID	☐	☐	46	Mfr. Spec[2]	52	☐	2,392	☐	☐
C	1X4 RETROFIT	☐	☐	38	Mfr. Spec[2]	42	☐	1,596	☐	☐
						Total Designed Watts CONDITIONED SPACES:		4,264		

[1] *FOOTNOTE: Design Watts for small aperture and color changing luminaires which qualify per §140.6(a)4B is adjusted to be 75% of their rated wattage. Table F automatically makes this adjustment, the permit applicant should enter full rated wattage in column 05.*
[2] *Authority Having Jurisdiction may ask for Luminaire cut sheets to confirm wattage used for compliance per §130.0(c) Wattage used must be the maximum rated for the luminaire, not the lamp.*

G. MODULAR LIGHTING SYSTEMS

This Section Does Not Apply

STATE OF CALIFORNIA
Indoor Lighting
NRCC-LTI-E (Created 01/20) — CALIFORNIA ENERGY COMMISSION

CERTIFICATE OF COMPLIANCE — NRCC-LTI-E

Project Name:	Grossmont HS Kitchen Building	Report Page:	Page 3 of 6
Project Address:	1100 Murray Dr. El Cajon, CA 92020	Date Prepared:	2-25-2022

H. INDOOR LIGHTING CONTROLS (Not Including PAFs)

This Section Does Not Apply

I. LIGHTING POWER ALLOWANCE: COMPLETE BUILDING OR AREA CATEGORY METHODS

Table Instructions: Complete the table for each area complying using the Complete Building or Area Category Methods per §140.6(b). Indicate if additional lighting power allowances per §140.6(c) or adjustments per §140.6(a) are being used.

Conditioned Spaces

01 Area Description	02 Complete Building or Area Category Primary Function Area	03 Allowed Density (W/ft²)	04 Area (ft²)	05 Allowed Wattage (Watts)	06 Additional Allowances / Adjustment: Area Category	PAF
	School Building	0.65	7,100	4,615	☐	☐
		TOTAL:	7,100	4,615	See Tables J or P for detail	

J. ADDITIONAL LIGHTING ALLOWANCE: AREA CATEGORY METHOD QUALIFYING LIGHTING SYSTEM

This Section Does Not Apply

K. TAILORED METHOD GENERAL LIGHTING POWER ALLOWANCE

This Section Does Not Apply

L. ADDITIONAL LIGHTING ALLOWANCE: TAILORED WALL DISPLAY

This Section Does Not Apply

M. ADDITIONAL LIGHTING ALLOWANCE: TAILORED FLOOR AND TASK LIGHTING

This Section Does Not Apply

N. ADDITIONAL LIGHTING ALLOWANCE: TAILORED ORNAMENTAL/SPECIAL EFFECTS

This Section Does Not Apply

O. ADDITIONAL LIGHTING ALLOWANCE: TAILORED VERY VALUABLE MERCHANDISE

This Section Does Not Apply

STATE OF CALIFORNIA
Indoor Lighting
NRCC-LTI-E (Created 01/20) — CALIFORNIA ENERGY COMMISSION

CERTIFICATE OF COMPLIANCE — NRCC-LTI-E

Project Name:	Grossmont HS Kitchen Building	Report Page:	Page 4 of 6
Project Address:	1100 Murray Dr. El Cajon, CA 92020	Date Prepared:	2-25-2022

P. POWER ADJUSTMENT: LIGHTING CONTROL CREDIT (POWER ADJUSTMENT FACTOR (PAF))

This Section Does Not Apply

Q. RATED POWER REDUCTION COMPLIANCE FOR ALTERATIONS

This Section Does Not Apply

R. 80% LIGHTING POWER FOR ALTERATIONS - CONTROLS EXCEPTIONS

This Section Does Not Apply

S. DAYLIGHT DESIGN POWER ADJUSTMENT FACTOR (PAF)

This Section Does Not Apply

T. DECLARATION OF REQUIRED CERTIFICATES OF INSTALLATION

Table Instructions: Selections have been made based on information provided in previous tables of this document. If any selection needs to be changed, please explain why in Table E. Additional Remarks. These documents must be provided to the building inspector during construction and can be found online at https://ww2.energy.ca.gov/title24/2019standards/2019_compliance_documents/Nonresidential_Documents/NRCI/

YES	NO	Form/Title	Field Inspector Pass	Fail
◉	○	NRCI-LTI-01-E - Must be submitted for all buildings	☐	☐
○	◉	NRCI-LTI-02-E - Must be submitted for a lighting control system, or for an Energy Management Control System (EMCS), to be recognized for compliance.	☐	☐
○	◉	NRCI-LTI-04-E - Must be submitted for two interlocked systems serving an auditorium, a convention center, a conference room, a multipurpose room, or a theater to be recognized for compliance.	☐	☐
○	◉	NRCI-LTI-05-E - Must be submitted for a Power Adjustment Factor (PAF) to be recognized for compliance.	☐	☐
○	◉	NRCI-LTI-06-E - Must be submitted for additional wattage installed in a video conferencing studio to be recognized for compliance.	☐	☐

STATE OF CALIFORNIA
Indoor Lighting
NRCC-LTI-E (Created 01/20) — CALIFORNIA ENERGY COMMISSION

CERTIFICATE OF COMPLIANCE — NRCC-LTI-E

Project Name:	Grossmont HS Kitchen Building	Report Page:	Page 5 of 6
Project Address:	1100 Murray Dr. El Cajon, CA 92020	Date Prepared:	2-25-2022

U. DECLARATION OF REQUIRED CERTIFICATES OF ACCEPTANCE

Table Instructions: Selections have been made based on information provided in previous tables of this document. If any selection needs to be changed, please explain why in Table E. Additional Remarks. These documents must be provided to the building inspector during construction and any with "-A" in the form name must be completed through an Acceptance Test Technician Certification Provider (ATTCP). For more information visit: http://www.energy.ca.gov/title24/attcp/providers.html

YES	NO	Form/Title	Field Inspector Pass	Fail
◉	○	NRCA-LTI-02-A - Must be submitted for occupancy sensors and automatic time switch controls.	☐	☐
◉	○	NRCA-LTI-03-A - Must be submitted for automatic daylight controls.	☐	☐
○	◉	NRCA-LTI-04-A - Must be submitted for demand responsive lighting controls.	☐	☐
○	◉	NRCA-LTI-05-A - Must be submitted for institutional tuning power adjustment factor (PAF).	☐	☐
○	◉	NRCA-ENV-03-F - Must be submitted for daylighting design power adjustment factors (PAF).	☐	☐

STATE OF CALIFORNIA
Indoor Lighting
NRCC-LTI-E (Created 01/20) — CALIFORNIA ENERGY COMMISSION

CERTIFICATE OF COMPLIANCE — NRCC-LTI-E

Project Name:	Grossmont HS Kitchen Building	Report Page:	Page 6 of 6
Project Address:	1100 Murray Dr. El Cajon, CA 92020	Date Prepared:	2-25-2022

DOCUMENTATION AUTHOR'S DECLARATION STATEMENT

I certify that this Certificate of Compliance documentation is accurate and complete

Documentation Author Name:	Monica Hansen	Documentation Author Signature:	[signature]
Company:	Johnson Consulting Engineers, Inc	Signature Date:	2-25-2022
Address:	12875 Brookprinter Place Suite 300	CEA/ HERS Certification Identification (if applicable):	E14781
City/State/Zip:	Poway/CA/92064	Phone:	858-679-4030

RESPONSIBLE PERSON'S DECLARATION STATEMENT

I certify the following under penalty of perjury, under the laws of the State of California:
1. **The information provided on this Certificate of Compliance is true and correct.**
2. **I am eligible under Division 3 of the Business and Professions Code to accept responsibility for the building design or system design identified on this Certificate of Compliance (responsible designer)**
3. **The energy features and performance specifications, materials, components, and manufactured devices for the building design or system design identified on this Certificate of Compliance conform to the requirements of Title 24, Part 1 and Part 6 of the California Code of Regulations.**
4. **The building design features or system design features identified on this Certificate of Compliance are consistent with the information provided on other applicable compliance documents, worksheets, calculations, plans and specifications submitted to the enforcement agency for approval with this building permit application.**
5. **I will ensure that a completed signed copy of this Certificate of Compliance shall be made available with the building permit(s) issued for the building, and made available to the enforcement agency for all applicable inspections. I understand that a completed signed copy of this Certificate of Compliance is required to be included with the documentation the builder provides to the building owner at occupancy.**

Responsible Designer Name:	Monica Hansen	Responsible Designer Signature:	[signature]
Company :	Johnson Consulting Engineers, Inc	Date Signed:	2-25-2022
Address:	12875 Brookprinter Place Suite 300	License:	E14781
City/State/Zip:	Poway/CA/92064	Phone:	858-679-4030

STATE OF CALIFORNIA
Outdoor Lighting
NRCC-LTO-E (Created 11/19) — CALIFORNIA ENERGY COMMISSION

CERTIFICATE OF COMPLIANCE — NRCC-LTO-E

This document is used to demonstrate compliance with requirements in §110.9, §130.0, §130.2, §140.7, and §141.0(b)2L for outdoor lighting scopes using the prescriptive path.

Project Name:	Grossmont HS Kitchen and Weight Room Buildings	Report Page:	Page 1 of 6
Project Address:	1100 Murray Dr., El Cajon, CA 92020	Date Prepared:	2-25-2022

A. GENERAL INFORMATION

01	Project Location (city)	Encinitas	04	Total Illuminated Hardscape Area (ft²)	2,000
02	Climate Zone	10			
03	Outdoor Lighting Zone per Title 24, Part 1 §10-114 or as designated by Authority Having Jurisdiction (AHJ):				

☐ LZ-0: Very Low - Undeveloped Parkland ☐ LZ-2: Moderate - Rural Areas ☐ LZ-4: High - Must be reviewed by CA Energy Commission for Approval
☐ LZ-1: Low - Developed Parkland ☑ LZ-3: Moderately High - Urban Areas

B. PROJECT SCOPE

Table Instructions: Include any outdoor lighting systems that are within the scope of the permit application and are demonstrating compliance using the prescriptive path outlined in §140.7 or §141.0(b)2L for alterations.

My project consists of:

01	02	
☑ New Lighting System	Must Comply with Allowances from §140.7.	
☐ Altered Lighting System	Is your alteration increasing the connected lighting load (Watts)?	○ Yes ○ No
03	04	05
% of Existing Luminaires Being Altered[1]	Sum Total of Luminaires Being Added or Altered	Calculation Method

[1] *FOOTNOTES: % of Existing Luminaires Being Altered = (Sum Total of Luminaires Being Added or Altered / Existing Luminaires within the Scope of the Permit Application) x 100*

C. COMPLIANCE RESULTS

Table Instructions: If any cell on this table says "DOES NOT COMPLY" or "COMPLIES with Exceptional Conditions" refer to Table D. for guidance.

Calculation of Total Allowed Lighting Power (Watts) §140.7 or §141.0(b)2L — Compliance Results

01 General Hardscape Allowance §140.7(d)1	+	02 Per Application §140.7(d)2	+	03 Sales Frontage §140.7(d)2	+	04 Ornamental §140.7(d)2	+	05 Per Specific Area §140.7(d)2	OR	06 Existing Power §141.0(b)2L	=	07 Total Allowed (Watts)	≥	08 Total Actual (Watts)	09 07 Must be ≥ 08
(See Table I)		(See Table J)		(See Table K)		(See Table L)		(See Table M)		(See Table N)				(See Table F)	
458	+	76	+		+		+		OR		=	534	≥	168	COMPLIES
Cutoff Compliance (See Table G for Details)														Not Applicable	
Controls Compliance (See Table H for Details)														COMPLIES	

STATE OF CALIFORNIA
Outdoor Lighting
NRCC-LTO-E (Created 11/19) — CALIFORNIA ENERGY COMMISSION

CERTIFICATE OF COMPLIANCE — NRCC-LTO-E

Project Name:	Grossmont HS Kitchen and Weight Room Buildings	Report Page:	Page 2 of 6
Project Address:	1100 Murray Dr., El Cajon, CA 92020	Date Prepared:	2-25-2022

D. EXCEPTIONAL CONDITIONS

This table is auto-filled with uneditable comments because of selections made or data entered in tables throughout the form.

No exceptional conditions apply to this project.

E. ADDITIONAL REMARKS

This table includes remarks made by the permit applicant to the Authority Having Jurisdiction.

F. OUTDOOR LIGHTING FIXTURE SCHEDULE

Table Instructions: For new or altered lighting systems demonstrating compliance with §140.7 (ie Table I has expanded for input), include all luminaires being installed and any existing luminaires remaining or being moved within the spaces covered by the permit application in the Table below. For altered lighting systems using the Existing Power method per §141.0(b)2L (ie Table N has expanded for input), include only new luminaires being installed and replacement luminaires being installed as part of the project scope (ie, do not include existing luminaires remaining or existing luminaires being moved).

Designed Wattage:

01 Name or Item Tag	02 Complete Luminaire Description		03 Watts per luminaire[1,2]	04 How Wattage is determined	05 Total number luminaires[2]	06 Luminaire Status[3]	07 Excluded per §140.7(a)	08 Design Watts	09 Cutoff Req. ≥ 6,200 initial lumen output §130.2(b)[4]	10 Field Inspector Pass	Fail
G10		☐ Linear	42		4	New	☐	168		☐	☐
							Total Designed Watts:	168			

* NOTES: Selections with a * require a note in the space below explaining how compliance is achieved.
EX: Luminaire is lighting a statue; EXCEPTION 2 to §130.2(b).

[1] *FOOTNOTES: Authority Having Jurisdiction may ask for Luminaire cut sheets to confirm wattage used for compliance per §130.0(c)*
[2] *For linear luminaires, wattage should be indicated as W/lf instead of Watts/luminaire. Total linear feet for the luminaire should be indicated in column 05 instead of number of luminaires.*
[3] *Select "New" for new luminaires in a new outdoor lighting project or for added luminaires in an alteration. Select "Altered" for replacement luminaires in an alteration. Select "Existing to Remain" for existing luminaires within the project scope that are not being altered and are remaining. Select "Existing Reinstalled" for existing luminaires which are being removed and reinstalled as part of the project scope*
[4] *Compliance with mandatory cutoff requirements is required for luminaires with initial lumen output ≥ 6,200 unless exempted by §130.2(b).*

STATE OF CALIFORNIA
Outdoor Lighting
NRCC-LTO-E (Created 11/19) — CALIFORNIA ENERGY COMMISSION

CERTIFICATE OF COMPLIANCE — NRCC-LTO-E

Project Name:	Grossmont HS Kitchen and Weight Room Buildings	Report Page:	Page 3 of 6
Project Address:	1100 Murray Dr., El Cajon, CA 92020	Date Prepared:	2-25-2022

G. CUTOFF REQUIREMENTS (BUG)

This Section Does Not Apply

H. OUTDOOR LIGHTING CONTROLS

Table Instructions: Complete this table demonstrating compliance with controls requirements for all new or altered luminaires installed as part of the permit application. For alteration projects, luminaires which are existing to remain (ie untouched) and luminaires which are removed and reinstalled (wiring only) do not need to be included in this table even if they are within the spaces covered by the permit application.
*When an option having a * is selected, the notes section of this table must be completed. The lighting controls section of the Compliance Summary Table on the first page will show "DOES NOT COMPLY" if the notes are left blank. For each requirement in columns 02 through 04, do not leave the field blank, instead select NA or Exempt* from the dropdown list to indicate not applicable or an exemption.*

Mandatory Controls

01 Area Description	02 Shut-Off §130.2(c)1	03 Auto-Schedule §130.2(c)2	04 Motion Sensor §130.2(c)3	05 Field Inspector Pass	Fail
site	Astronomical Timer	Yes - EMCS	Yes	☐	☐

*NOTES: Controls with a * require a note in the space below explaining how compliance is achieved.
EX: Not permitted by health & safety to be turned off; EXCEPTION 1 to §130.2(c).

I. LIGHTING POWER ALLOWANCE (per §140.7)

Table Instructions: Please complete this table for areas using the allowance calculations per §140.7. General Hardscape Allowance is per Table 140.7-A while "Use it or lost it" Allowances are per Table 140.7-B. Indicate which allowances are being used to expand sections for user input. Luminaires that qualify for one of the "Use it or lose it" allowances shall not qualify for another "Use it or lose it" allowance.

01				
☑ General Hardscape Allowance	"Use it or lose it" Allowances (select all that apply): ☑ Per Application	☐ Sales Frontage	☐ Ornamental	☐ Per Specific Area
Table I (below)	Table J	Table K	Table L	Table M

Calculated General Hardscape Lighting Power Allowance per Table 140.7-A (LZ 2 & 3)

02 Area Description	03 Surface Type	04 Area Wattage Allowance (AWA): Illuminated Area (ft²)	05 Allowed Density (W/ft²)	06 Area Allowance (Watts)	07 Linear Wattage Allowance (LWA): Perimeter Length (lf)	08 Allowed Density (W/lf)	09 Linear Allowance (Watts)	10 Total General AWA + LWA (Watts)

Table Continued

STATE OF CALIFORNIA
Outdoor Lighting
NRCC-LTO-E (Created 11/19) — CALIFORNIA ENERGY COMMISSION

CERTIFICATE OF COMPLIANCE — NRCC-LTO-E

Project Name:	Grossmont HS Kitchen and Weight Room Buildings	Report Page:	Page 4 of 6
Project Address:	1100 Murray Dr., El Cajon, CA 92020	Date Prepared:	2-25-2022

Site Hardscape	Concrete	2,000	0.03	60	120	0.4	48	108
						Initial Wattage Allowance for Entire Site (Watts):		350
						Total General Hardscape Allowance (Watts):		458

J. LIGHTING ALLOWANCE: PER APPLICATION

Table Instructions: Please complete this table for areas using the wattage allowance per application from Table-140.7-B.

01 Area Description	02 Application per Table 140.7-B[1]	03 # of Locations	04 Allowance per Location[2] (Watts)	05 Extra Allowance (Watts)	06 Luminaire Name or Item Tag	07 Watts per Luminaire[3]	08 # of Luminaires[3]	09 Design Watts	10 Additional Allowance (Watts)
	Bldg Entrance/ Exit	4	19	76	G10	25	4	100	
						Total Design Watts for this Area:		100	76
						Total Allowance (Watts) All Areas:			76

(Columns 03–05: CALCULATED ALLOWANCE (Watts); columns 06–09: DESIGN WATTS)

[1] *FOOTNOTES: Primary entrance applications are only available for senior care facilities, healthcare facilities, police stations, hospitals, fire stations, and emergency vehicle facilities.*
[2] *The Allowance per Location for ATMs is 100W for the first ATM and 35W for each additional per Table 140.7-B.*
[3] *For luminaires indicated in Table F as linear, wattage in column 07 is W/lf instead of Watts/luminaire. Total linear feet for the luminaire should be indicated in column 08 instead of number of luminaires.*

K. LIGHTING ALLOWANCE: SALES FRONTAGE

This Section Does Not Apply

L. LIGHTING ALLOWANCE: ORNAMENTAL

This Section Does Not Apply

M. LIGHTING ALLOWANCE: PER SPECIFIC AREA

This Section Does Not Apply

N. EXISTING CONDITIONS POWER ALLOWANCE (alterations only)

This Section Does Not Apply

STATE OF CALIFORNIA
Outdoor Lighting
NRCC-LTO-E (Created 11/19) — CALIFORNIA ENERGY COMMISSION

CERTIFICATE OF COMPLIANCE — NRCC-LTO-E

Project Name:	Grossmont HS Kitchen and Weight Room Buildings	Report Page:	Page 5 of 6
Project Address:	1100 Murray Dr., El Cajon, CA 92020	Date Prepared:	2-25-2022

O. DECLARATION OF REQUIRED CERTIFICATES OF INSTALLATION

Table Instructions: Selections have been made based on information provided in previous tables of this document. If any selection needs to be changed, please explain why in Table E. Additional Remarks. These documents must be provided to the building inspector during construction and can be found online at https://www.energy.ca.gov/title24/2019standards/2019_compliance_documents/Nonresidential_Documents/NRCI/

YES	NO	Form/Title	Field Inspector Pass	Fail
◉	○	NRCI-LTO-01-E - Must be submitted for all buildings.	☐	☐
◉	○	NRCI-LTO-02-E - Must be submitted for a lighting control system; or for an Energy Management Control System (EMCS), to be recognized for compliance.	☐	☐

P. DECLARATION OF REQUIRED CERTIFICATES OF ACCEPTANCE

Table Instructions: Selections have been made based on information provided in previous tables of this document. If any selection needs to be changed, please explain why in Table E. Additional Remarks. These documents must be provided to the building inspector during construction and must be completed through an Acceptance Test Technician Certification Provider (ATTCP). For more information visit: http://www.energy.ca.gov/title24/attcp/providers.html

YES	NO	Form/Title	Field Inspector Pass	Fail
◉	○	NRCA-LTO-02-A - Must be submitted for all outdoor lighting controls except for alterations where controls area added to ≤ 20 luminaires.	☐	☐

STATE OF CALIFORNIA
Outdoor Lighting
NRCC-LTO-E (Created 11/19) — CALIFORNIA ENERGY COMMISSION

CERTIFICATE OF COMPLIANCE — NRCC-LTO-E

Project Name:	Grossmont HS Kitchen and Weight Room Buildings	Report Page:	Page 6 of 6
Project Address:	1100 Murray Dr., El Cajon, CA 92020	Date Prepared:	2-25-2022

DOCUMENTATION AUTHOR'S DECLARATION STATEMENT

I certify that this Certificate of Compliance documentation is accurate and complete

Documentation Author Name:	Monica Hansen	Documentation Author Signature:	[signature]
Company:	Johnson Consulting Engineers, Inc.	Signature Date:	2-25-2022
Address:	12875 Brookprinter Place Suite 300	CEA/ HERS Certification Identification (if applicable):	E14781
City/State/Zip:	Poway/CA/92064	Phone:	858-679-4030

RESPONSIBLE PERSON'S DECLARATION STATEMENT

I certify the following under penalty of perjury, under the laws of the State of California:
1. **The information provided on this Certificate of Compliance is true and correct.**
2. **I am eligible under Division 3 of the Business and Professions Code to accept responsibility for the building design or system design identified on this Certificate of Compliance (responsible designer)**
3. **The energy features and performance specifications, materials, components, and manufactured devices for the building design or system design identified on this Certificate of Compliance conform to the requirements of Title 24, Part 1 and Part 6 of the California Code of Regulations.**
4. **The building design features or system design features identified on this Certificate of Compliance are consistent with the information provided on other applicable compliance documents, worksheets, calculations, plans and specifications submitted to the enforcement agency for approval with this building permit application.**
5. **I will ensure that a completed signed copy of this Certificate of Compliance shall be made available with the building permit(s) issued for the building, and made available to the enforcement agency for all applicable inspections. I understand that a completed signed copy of this Certificate of Compliance is required to be included with the documentation the builder provides to the building owner at occupancy.**

Responsible Designer Name:	Monica Hansen	Responsible Designer Signature:	[signature]
Company :	Johnson Consulting Engineers, Inc	Date Signed:	2-25-2022
Address:	12875 Brookprinter Place Suite 300	License:	E14781
City/State/Zip:	Poway/CA/92064	Phone:	858-679-4030

PROJECT No. :1-30-55
6/21/2022 9:08:16 AM

DRAWN BY: CHECKED BY:
ISSUE No.______ DATE________ DESCRIPTION________ REVISION No.______ DATE________ DESCRIPTION________
ISSUE No.______ DATE________ DESCRIPTION________ REVISION No.______ DATE________ DESCRIPTION________
ISSUE No.______ DATE________ DESCRIPTION________ REVISION No.______ DATE________ DESCRIPTION________
ISSUE No.______ DATE________ DESCRIPTION________ REVISION No.______ DATE________ DESCRIPTION________

RUHNAUCLARKE.COM
3775 TENTH STREET, RIVERSIDE CALIFORNIA 92501 (951) 684 4664 / 5751 PALMER WAY, SUITE C, CARLSBAD CALIFORNIA 92010 (760) 438 5899

GHS KITCHEN & WEIGHTROOM MOD
GROSSMONT HIGH SCHOOL
1100 MURRAY DR, EL CAJON, CA 92020
GROSSMONT UNION HIGH SCHOOL

TITLE 24

E2.0

1-30-55

GHS KITCHEN & WEIGHTROOM MOD:

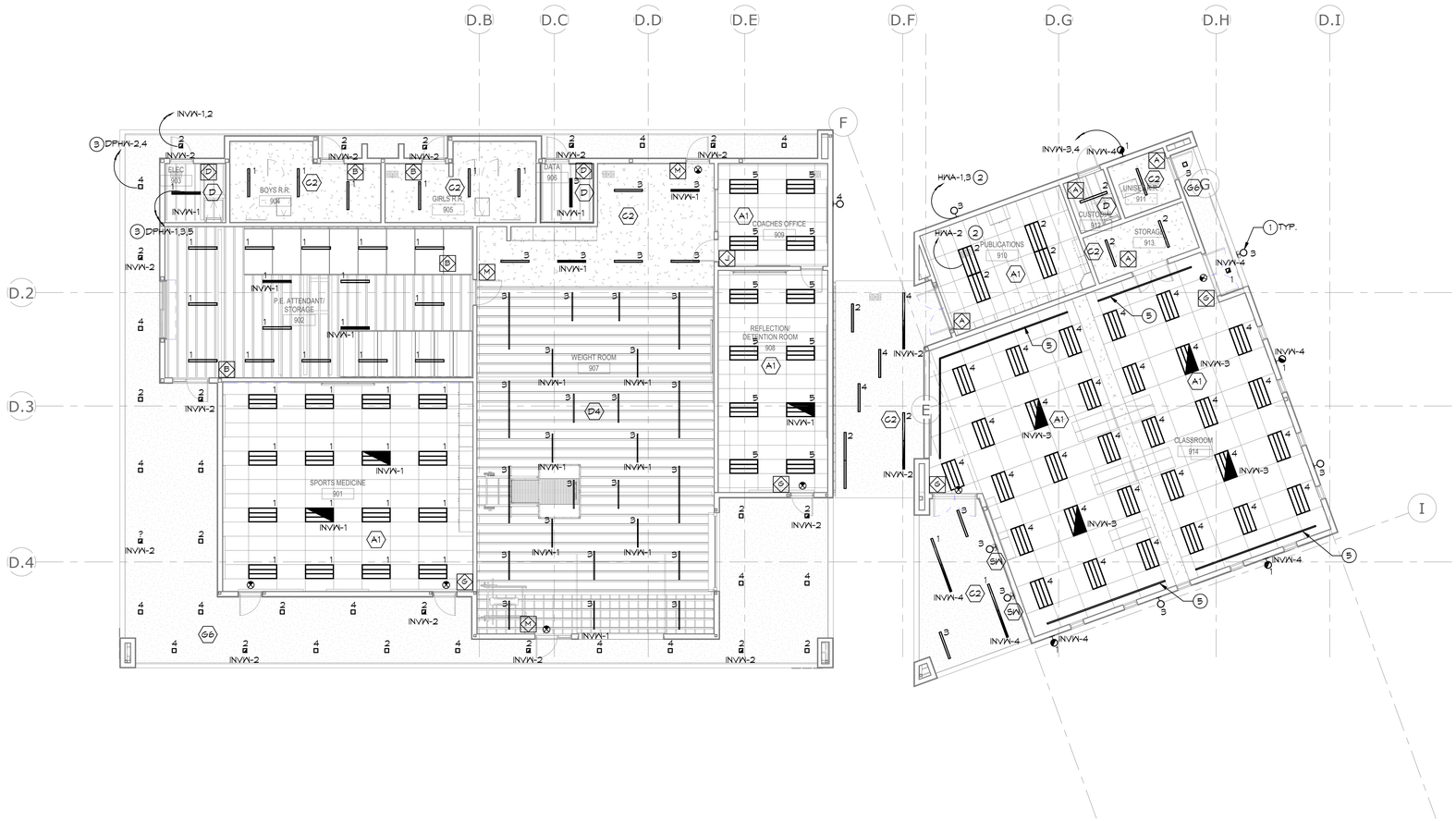

NORTH

BLDG 900 FLOOR PLAN - LIGHTING

SCALE: 1/8" = 1'-0"

REF.: /

1

PROJECT No. :1-30-55
6/21/2022 9:08:20 AM

DRAWN BY: CHECKED BY:

ISSUE No.____ DATE____ DESCRIPTION____
ISSUE No.____ DATE____ DESCRIPTION____
ISSUE No.____ DATE____ DESCRIPTION____
ISSUE No.____ DATE____ DESCRIPTION____

REVISION No.____ DATE____ DESCRIPTION____
REVISION No.____ DATE____ DESCRIPTION____
REVISION No.____ DATE____ DESCRIPTION____
REVISION No.____ DATE____ DESCRIPTION____

RUHNAUCLARKE.COM

3775 TENTH STREET, RIVERSIDE CALIFORNIA 92501 (951) 684 4664 / 5751 PALMER WAY, SUITE C, CARLSBAD CALIFORNIA 92010 (760) 438 5899

GHS KITCHEN & WEIGHTROOM MOD

GROSSMONT HIGH SCHOOL
1100 MURRAY DR, EL CAJON, CA 92020
GROSSMONT UNION HIGH SCHOOL

BLDG 900 FLOOR PLAN - LIGHTING

E2.1

1-30-55

GHS KITCHEN & WEIGHTROOM MOD:

#21087
STAMPS

6/21/2022 9:08:20 AM

IDENTIFICATION STAMP
DIV. OF THE STATE ARCHITECT
APP: 04-120895 INC:
REVIEWED FOR
SS ☑ FLS ☑ ACS ☑
DATE: 06/27/2022

AGENCY
File No.

JOHNSON
CONSULTING ENGINEERS, INC.

Power | Lighting | Multimedia
Communications | Data Networking

12875 Brookprinter Place, Suite 300
Poway, CA 92064
P 858.679.4030 | F 858.513.0559
www.jce-inc.com

CONSULTANT BRANDING

RUHNAU CLARKE ARCHITECTS

GENERAL NOTES:

1. REFERENCE ARCHITECTURAL REFLECTED CEILING PLANS FOR EXACT LOCATION OF ALL LIGHTING FIXTURES.
2. REFERENCE E2 SERIES SHEETS FOR ALL FIXTURE TYPES AND FOR TYPICAL DETAILS.
3. REFERENCE E8 SERIES SHEETS FOR TYPICAL CONDUIT AND BACKBOX INSTALLATION DETAILS.
4. LETTERS IN OR ADJACENT TO EACH FIXTURE OR FIXTURE ROW INDICATES SWITCH AND OR OCCUPANCY SENSOR WHICH CONTROLS THE LIGHTING FIXTURE.
5. CIRCUIT HOMERUNS ARE INDICATED TO SHOW THE LOCATION AND NUMBER OF CIRCUITS TO BE GROUPED TOGETHER.
6. PROVIDE MINIMUM 3/4" CONDUIT AND #12 CIRCUIT CONDUCTORS AS REQUIRED TO CONNECT EACH LIGHTING FIXTURES TO THEIR INDICATED CONTROL DEVICES. (U.O.N.)

KEY NOTES:

1. SEE ARCHITECTURAL PLANS FOR MOUNTING HEIGHT.
2. 2 #12 (HOT), 1 #10 (NEUTRAL), 1 #12 (GND), 3/4"C.
3. 3 #12 (HOT), 1 #10 (NEUTRAL), 1 #12 (GND), 3/4"C.
4. 4 #12 (HOT), 2 #10 (NEUTRAL), 1 #12 (GND), 3/4"C.
5. PROVIDE TRACK LIGHTING WITH MEDIUM FLOOD 4000K LIGHTING FIXTURE EVERY 8' AS MANUFACTURED BY TARGETTI #FORTYEIGHT LABEL 4. PROVIDE SEPARATE LIGHT SWITCH TO CONTROL ONLY THE TRACK LIGHTING.

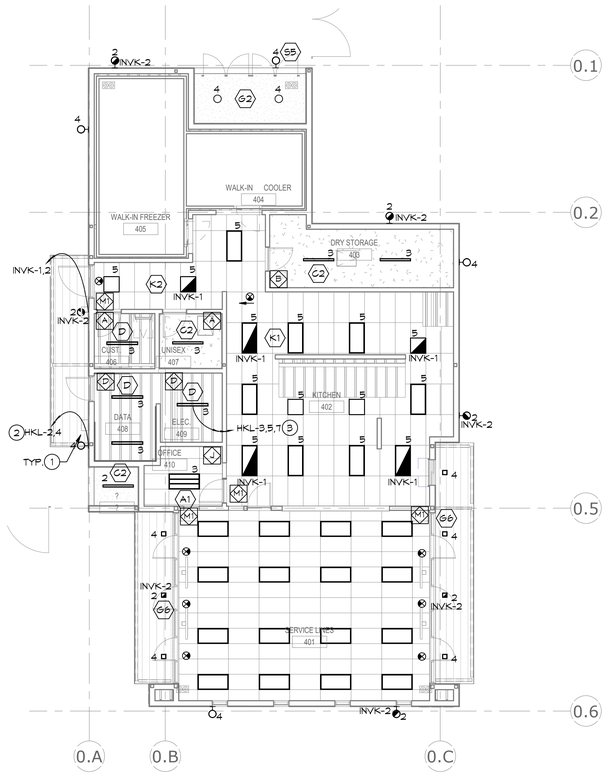

KITCHEN FLOOR PLAN - LIGHTING

SCALE: 1/8" = 1'-0"
REF. /
1

NORTH

#21087
STAMPS

6/21/2022 9:08:23 AM

IDENTIFICATION STAMP
DIV. OF THE STATE ARCHITECT
APP: 04-120895 INC:
REVIEWED FOR
SS ☑ FLS ☑ ACS ☑
DATE: 06/27/2022
AGENCY
FILE

JOHNSON
CONSULTING ENGINEERS, INC.
Power | Lighting | Multimedia
Communications | Data Networking
12875 Brookprinter Place, Suite 300
Poway, CA 92064
P 858.679.4030 | F 858.513.0559
www.jce-inc.com
CONSULTANT BRANDING

RUHNAU
CLARKE
ARCHITECTS

GENERAL NOTES:

1. REFERENCE ARCHITECTURAL REFLECTED CEILING PLANS FOR EXACT LOCATION OF ALL LIGHTING FIXTURES.
2. REFERENCE E2 SERIES SHEETS FOR ALL FIXTURE TYPES AND FOR TYPICAL DETAILS.
3. REFERENCE E3 SERIES SHEETS FOR TYPICAL CONDUIT AND BACKBOX INSTALLATION DETAILS.
4. LETTERS IN OR ADJACENT TO EACH FIXTURE OR FIXTURE ROW INDICATES SWITCH AND OR OCCUPANCY SENSOR WHICH CONTROLS THE LIGHTING FIXTURE.
5. CIRCUIT HOMERUNS ARE INDICATED TO SHOW THE LOCATION AND NUMBER OF CIRCUITS TO BE GROUPED TOGETHER.
6. PROVIDE MINIMUM 3/4" CONDUIT AND #12 CIRCUIT CONDUCTORS AS REQUIRED TO CONNECT EACH LIGHTING FIXTURES TO THEIR INDICATED CONTROL DEVICES. (U.O.N.)

KEY NOTES:

1. SEE ARCHITECTURAL PLANS FOR MOUNTING HEIGHT.
2. 2 #12 (HOT), 1 #10 (NEUTRAL), 1 #12 (GND), 3/4"C.
3. 3 #12 (HOT), 1 #10 (NEUTRAL), 1 #12 (GND), 3/4"C.
4. 4 #12 (HOT), 2 #10 (NEUTRAL), 1 #12 (GND), 3/4"C.

GHS KITCHEN & WEIGHTROOM MOD:

PROJECT No. :1-30-55
6/21/2022 9:08:23 AM

DRAWN BY: CHECKED BY:

ISSUE No.____	DATE_____	DESCRIPTION_____	REVISION No.____	DATE_____	DESCRIPTION_____
ISSUE No.____	DATE_____	DESCRIPTION_____	REVISION No.____	DATE_____	DESCRIPTION_____
ISSUE No.____	DATE_____	DESCRIPTION_____	REVISION No.____	DATE_____	DESCRIPTION_____
ISSUE No.____	DATE_____	DESCRIPTION_____	REVISION No.____	DATE_____	DESCRIPTION_____

RUHNAUCLARKE.COM
3775 TENTH STREET, RIVERSIDE CALIFORNIA 92501(951) 684 4664 / 5751 PALMER WAY, SUITE C, CARLSBAD CALIFORNIA 92010(760) 438 5899

GHS KITCHEN & WEIGHTROOM MOD
GROSSMONT HIGH SCHOOL
1100 MURRAY DR, EL CAJON, CA 92020
GROSSMONT UNION HIGH SCHOOL

KITCHEN FLOOR PLAN - LIGHTING

E2.2

1-30-55

LIGHTING FIXTURE SCHEDULE

Mark	Approved Manufacturer's (See Key Note No. 1)	Catalog Series Type (See Key Note No. 2)	FIXTURE: Incandescent	Fluorescent	Metal Halide	High Pressure Sodium	Low Pressure Sodium	LED	Volts	Lamps Watts / Fixture Watts	LAMP: No.	Type	MOUNTING: Recessed / Ceiling	Surface / Ceiling	Wall	Recessed / Wall	Pendant	Surface / Wall	Pole	Description
S5	LITHONIA LIGHTING	WST LED SERIES	☐	☐	☐	☐	☐	■	■120				☐	☐	☐	☐	☐	■	☐	
	HUBBELL	GEOPAK SERIES TRP2							☐208											TRAPEZOIDAL WALL SCONCE WITH INTEGRAL PHOTOCELL MIN. 3000 LUMENS
	MCGRAW EDISON	IST SERIES							■277	30w										
	VISIONR	PGAS SERIES							☐480											☐ Provide Emergency Ballast Type 'EM' ☐ Provide Custom Color Finish, to be selected at time submittal ☐ See Detail
	GARDCO	101 SERIES																		
SP	ARCH AREA LTG	LARGENT SERIES	☐	☐	☐	☐	☐	■	■120				☐	☐	☐	☐	☐	☐	■	
	NLS LIGHTING	NOVA2 SERIES							☐208											POST TOP POLE MOUNTED FIXTURE, 25" DIAMETER HEAD WITH 3 ARMS RISING UP TO HEAD FROM POLE, MINIMUM 7,000 LUMEN, 4000 KELVIN, 0-10v DIMMING TYPE 5, CAST ALUMINUM, MOUNTED ON 10'-0" ALUMINUM POLE DESIGNED FOR 115 MPH WIND SPEED WITH MOTION SENSOR AND METALLIC SILVER FINISH.
	INVUE	MSA SERIES							■277	76										
	VISION	PRE SERIES							☐480											☐ Provide Emergency Ballast Type 'EM' ☐ Provide Custom Color Finish, to be selected at time submittal ■ See Detail 1/E2.7
	GARDCO	PPT SERIES																		
SW	ELECTRIX	MHIGH SERIES	☐	☐	☐	☐	☐	■	■120				☐	☐	☐	☐	☐	■	☐	
	OR EQUAL								☐208											RECTANGULAR WALL WASH SCONCE, MIN. 1500 LUMENS, 4000K COLOR TEMPERATURE, VERIFY COLOR WITH ARCHITECT.
									■277	23w										
									☐480											☐ Provide Emergency Ballast Type 'EM' ☐ Provide Custom Color Finish, to be selected at time submittal ☐ See Detail
X	LIGHT OLIER	TE SERIES	☐	☐	☐	☐	☐	■	■120				☐	■	☐	☐	☐	☐	☐	
	ISOLITE	SLX-60 SERIES							☐208											SELF LUMINOUS EXIT SIGN WITH GREEN LETTERING. NUMBER OF FACES AS REQUIRED. SURFACE MOUNT ABOVE DOOR OR CEILING MOUNT AS REQUIRED. 20 YR LIFE AND PLASTIC WHITE FRAME
	MERIT	P180 SERIES							■277	N/A										
	LIGHTOLIER	TE SERIES							☐480											☐ Provide Emergency Ballast Type 'EM' ☐ Provide Custom Color Finish, to be selected at time submittal ☐ See Detail
	EVENLITE	LIFELINE LEX SERIES																		

LIGHTING FIXTURE SCHEDULE

Mark	Approved Manufacturer's (See Key Note No. 1)	Catalog Series Type (See Key Note No. 2)	FIXTURE: Incandescent	Fluorescent	Metal Halide	High Pressure Sodium	Low Pressure Sodium	LED	Volts	Lamps Watts / Fixture Watts	LAMP: No.	Type	MOUNTING: Recessed / Ceiling	Surface / Ceiling	Wall	Recessed / Wall	Pendant	Surface / Wall	Pole	Description
A1	DAY-BRITE	EVO GRID 2X4	☐	☐	☐	☐	☐	■	■120				■	☐	☐	☐	☐	☐	☐	Provide Ballast Type
	COLUMBIA	LTGR24							☐208											2'X4' T-GRID FIXTURE WITH CENTER BASKET/CURVED DIFFUSER. MINIMUM 5000 LUMENS AT A CCT OF 4000 KELVIN. DRIVER VOLTAGE UNIVERSAL. 0-10v DIMMING.
	LITHONIA	2BLT							■277	42w										
	CRUZE	ST							☐480											☐ Provide Emergency Ballast Type 'EM' ☐ Provide Custom Color Finish, to be selected at time submittal ☐ See Detail
C2	PINNACLE ARCH. LIGHTING	EDGE EV3A SERIES	☐	☐	☐	☐	☐	■	■120				■	☐	☐	☐	☐	☐	☐	
	PHILIPS LEDALITE	TRUGROOVE STANDALONE							☐208											LINEAR FLANGED FIXTURE. 3"W X 5 1/8"D X 47"L. MINIMUM 2568 LUMENS AT A CCT OF 4000 KELVIN. MATTE WHITE FINISH. 0-10v DIM.
	LUMENWERX	VIA 3 LED (RECESSED)							■277	34.4w										
	AXIS LIGHTING	BEAM3 LED SERIES							☐480											☐ Provide Emergency Ballast Type 'EM' ☐ Provide Custom Color Finish, to be selected at time submittal ☐ See Detail
	NEO-RAY	DEFINE 3 RECESSED																		
D	LITHONIA LIGHTING	ZL1N SERIES	☐	☐	☐	☐	☐	■	■120				☐	■	☐	☐	☐	☐	☐	
	DAY-BRITE	FLUXSTREAM							☐208											LINEAR SURFACE STRIP FIXTURE. 3 3/8"W X 3 1/4"H X 48 1/8"L. MINIMUM 5000 LUMENS AT A CCT OF 5000 KELVIN. 0-10v DIM.
	COLUMBIA	LCL SERIES							■277	45w										
	WILLIAMS	75 LED SERIES							☐480											☐ Provide Emergency Ballast Type 'EM' ☐ Provide Custom Color Finish, to be selected at time submittal ☐ See Detail
	METALUX	SNLED																		
D4	CORONET	LS1 LED UP/DN SERIES	☐	☐	☐	☐	☐	■	■120				☐	☐	☐	☐	■	☐	☐	
	BIRCHWOOD	BW165 SERIES							☐208											LINEAR PENDANT FIXTURE WITH UP AND DOWNLIGHT, 4.135"H X 1.895"W, SEE FLOOR PLANS FOR EXACT LENGTH, 5 WATTS PER FOOT UPLIGHT, 5 WATTS PER FOOT DOWNLIGHT, 430 LM/FT DOWNLIGHT, 380 LM/FT UPLIGHT, 4000 KELVIN. WHITE FINISH. 0-10v DIMMING
									■277	40										
									☐480											☐ Provide Emergency Ballast Type 'EM' ☐ Provide Custom Color Finish, to be selected at time submittal ■ See Detail 7/E2.6
G2	GOTHAM	6" EVO SERIES	☐	☐	☐	☐	☐	■	■120				■	☐	☐	☐	☐	☐	☐	
	COVENTRY	6LB79VWL SERIES							☐208											6 INCH DIAMETER MINIMUM 3000 LUMENS AT A CCT OF 400 KELVIN. WET LOCATION LISTED. VANDAL RESISITANT PRISMATIC POLYCARBONATE LENS.
	PHILIPS LIGHTOLIER	CALCULITE LED GEN3							■277	30w										
	FAIL-SAFE	LD6B							☐480											☐ Provide Emergency Ballast Type 'EM' ☐ Provide Custom Color Finish, to be selected at time submittal ☐ See Detail
G6	ALPHABET	NU6" SERIES	☐	☐	☐	☐	☐	■	■120				■	☐	☐	☐	☐	☐	☐	
									☐208											6 INCH SQUARE DOWNLIGHT, MINIMUM 1500 LUMENS AT A CCT OF 4000 KELVIN. WET LOCATION LISTED. VANDAL RESISITANT SMOOTH CLEAR LENS, WHITE FINISH.
	PHILIPS LIGHTOLIER	P6S SERIES							■277	17w										
									☐480											☐ Provide Emergency Ballast Type 'EM' ☐ Provide Custom Color Finish, to be selected at time submittal ☐ See Detail
G7	3G LIGHTING	3G-PDL45RF	☐	☐	☐	☐	☐	■	■120				■	☐	☐	☐	☐	☐	☐	
	NAL	EC-HLC SERIES							☐208											4.5 INCH DIAMETER PENDANT CYLINDER, 7" HIGH, MINIMUM 1500 LUMENS AT A CCT OF 4000 KELVIN, WHITE FINISH.
									■277	17w										
									☐480											☐ Provide Emergency Ballast Type 'EM' ☐ Provide Custom Color Finish, to be selected at time submittal ■ See Detail 5/E2.6
K1	KURTZON	WL RECESSED 2'X4'	☐	☐	☐	☐	☐	■	■120				■	☐	☐	☐	☐	☐	☐	
	KENALL	CSED024 SERIES							☐208											ENCLOSED AND GASKETED 2'X4' RECESSED MOUNT FIXTURE. .125" PRISMATIC ACRYLIC LENS (INVERTED) AND FLUSH ALUMINUM WHITE DOOR FRAME, PROVIDE LENS AND FRAME NEOPRENE GASKETING, MINIMUM 5000 LUMENS AT A CCT OF 5000 KELVIN. DRIVER VOLTAGE UNIVERSAL. 0-10v DIMMING.
	FAIL-SAFE	GRW							■277	50										
	LA LTG	GWL320							☐480											☐ Provide Emergency Ballast Type 'EM' ☐ Provide Custom Color Finish, to be selected at time submittal ☐ See Detail
	NEWSTAR	57R SERIES																		
K2	KURTZON	WL RECESSED 2'X2'	☐	☐	☐	☐	☐	■	■120				■	☐	☐	☐	☐	☐	☐	
	KENALL	CSED022 SERIES							☐208											ENCLOSED AND GASKETED 2'X2' RECESSED MOUNT FIXTURE. .125" PRISMATIC ACRYLIC LENS (INVERTED) AND FLUSH ALUMINUM WHITE DOOR FRAME, PROVIDE LENS AND FRAME NEOPRENE GASKETING, MINIMUM 5000 LUMENS AT A CCT OF 5000 KELVIN. DRIVER VOLTAGE UNIVERSAL. 0-10v DIMMING.
	FAIL-SAFE	GRW							■277	50										
	LA LTG	GWL320							☐480											☐ Provide Emergency Ballast Type 'EM' ☐ Provide Custom Color Finish, to be selected at time submittal ☐ See Detail
	NEWSTAR	57R SERIES																		

LIGHTING FIXTURE SCHEDULE KEY NOTES:

1. ALTERNATE MANUFACTURER'S TO THOSE SPECIFIED MAY BE SUBMITTED FOR APPROVAL. ALTERNATE MANUFACTURER'S MUST MEET THE MINIMUM CRITERIA INDICATED IN THE DESCRIPTION AND OPTIONS COLUMNS OF THIS SCHEDULE, AND MUST BE EQUAL TO THE SPECIFIED FIXTURE AS DETERMINED BY THE SPECIFYING ENGINEER. (ALTERNATE FIXTURES MUST BE APPROVED PRIOR TO BID, ALLOW 72 HOURS FOR ENGINEER REVIEW AND APPROVED). WHERE 'NO KNOWN EQUAL' IS INDICATED THE FIXTURE DOES NOT HAVE AN EQUAL TO MEET THE PROJECT REQUIREMENTS, AND ALTERNATE SELECTIONS WILL NOT BE ACCEPTED.
2. COMPLETE CATALOG NUMBERS HAVE NOT BEEN PROVIDED, REFERENCE THE DESCRIPTION AND OPTIONS COLUMNS OF THIS SCHEDULE FOR COMPLETE FIXTURE REQUIREMENTS.
3. EMERGENCY POWER FOR LIGHTING IS SUPPLIED BY EM GENERATOR.

REGISTERED PROFESSIONAL ENGINEER GOESE-HANSEN NO.E 14781 Exp. 6-30-2023 ELECTRICAL STATE OF CALIFORNIA

LICENSED ARCHITECT ROGER CLARKE No. C-21340 Exp. 10-31-23 STATE OF CALIFORNIA

#21087
STAMPS
6/21/2022 9:08:25 AM

IDENTIFICATION STAMP
DIV. OF THE STATE ARCHITECT
APP: 04-120895 INC:
REVIEWED FOR
SS ☑ FLS ☑ ACS ☑
DATE: 06/27/2022

JOHNSON CONSULTING ENGINEERS, INC.
Power | Lighting | Multimedia
Communications | Data Networking
12875 Brookprinter Place, Suite 300
Poway, CA 92064
P 858.679.4030 | F 858.513.0559
www.jce-inc.com
CONSULTANT BRANDING

RUHNAU CLARKE ARCHITECTS

PROJECT No. :1-30-55
6/21/2022 9:08:25 AM

DRAWN BY: CHECKED BY:
ISSUE No.____ DATE____ DESCRIPTION____ (×4)
REVISION No.____ DATE____ DESCRIPTION____ (×4)

RUHNAUCLARKE.COM
3775 TENTH STREET, RIVERSIDE CALIFORNIA 92501 (951) 684 4664 / 5751 PALMER WAY, SUITE C, CARLSBAD CALIFORNIA 92010 (760) 438 5899

GHS KITCHEN & WEIGHTROOM MOD
GROSSMONT HIGH SCHOOL
1100 MURRAY DR, EL CAJON, CA 92020
GROSSMONT UNION HIGH SCHOOL

FIXTURE SCHEDULE

E2.3

1-30-55

GHS KITCHEN & WEIGHTROOM MOD:

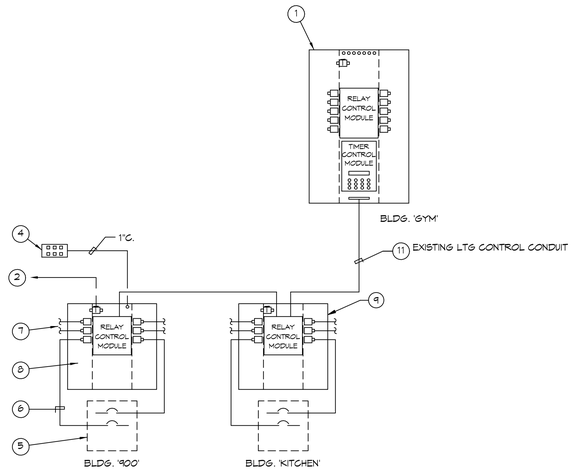

KEY NOTES:

1. EXISTING MASTER LIGHTING CONTROLLER.
2. 120 VOLT POWER CONNECTION TO CONTROL POWER TRANSFORMER.
3. PHOTOCELL MOUNTED ON ROOF, NUMBER OF CONDUCTORS AS REQUIRED BY MANUFACTURER.
4. REMOTE OVERRIDE CONTROL STATION SEE SCHEDULE FOR QUANTITY AND LOCATION.
5. BUILDING ELECTRICAL PANELBOARD.
6. PROVIDE (1) 3/4"C. AND WIRING AS REQUIRED BY MANUFACTURER FOR EVERY (3) CIRCUITS CONTROLLED FROM EACH PANEL. SEE ZONE SCHEDULE FOR QUANTITY.
7. SEE ZONE SCHEDULE FOR QUANTITY OF RELAYS REQUIRED.
8. REMOTE BUILDING LIGHTING CONTROL PANEL.
9. SEE BUILDING '900' FOR TYPICAL REMOTE BUILDING NOTES AND REQUIREMENTS.
10. PROGRAMMABLE CONTROLLER WITH PUSH BUTTON KEY PAD AND LCD ALPHANUMERIC DISPLAY. ALL RELAYS TO BE INDIVIDUALLY OR GROUP TIME SCHEDULED PER DISTRICT PROVIDED SCHEDULE. INCLUDE ASTRONOMICAL, HOLIDAY SCHEDULING AND DAYLIGHT SAVINGS PROGRAMMING.
11. PROVIDE CONTROL WIRING AS REQUIRED BY MANUFACTURER.
12. 3/4"C. AND WIRING AS REQUIRED BY MANUFACTURER TO TELEPHONE SYSTEM.
13. PROVIDE TELEPHONE INTERFACE MODULE.
14. DURING 'OFF' TIME PERIODS THE OVERRIDE STATION WHEN PUSHED WILL TURN ON THE ZONE FOR A PERIOD OF 5 HOURS.
15. PROVIDE ENGRAVED ZONE DESCRIPTION IDENTIFICATIONS FOR EACH SWITCH TO MATCH DESCRIPTION SHOWN IN ZONE SCHEDULE.'
16. PROVIDE 1"C. AND 2 # 18 FOR EACH ZONE CONTROL SWITCH PLUS 1 # 12 COMMON FOR EVERY (6) ZONE CONTROL SWITCHES. VERIFY EXACT NUMBER OF CONDUCTORS AT TIME OF SUBMITTAL. ABC = (3) ZONES AND (3) SEPARATE ON-OFF SWITCHES, AB = (2) ZONES AND (2) SEPARATE ON-OFF SWITCHES, ETC-
17. PROVIDE IN FLUSH MOUNTED BOX WITH KEY LOCKING COVER.

MASTER LIGHTING CONTROL ZONE SCHEDULE

ZONE	ZONE DESCRIPTION	BLDG. 900	BLDG. KITCHEN									
		PANELBOARD CIRCUITS CONTROLLED										
A	EXTERIOR LIGHTING	DPHA-2 HAA-1	HKL-2									
B	EXTERIOR LIGHTING	DPHA-4 HAA-3	HKL-4									
C	STUDENT RESTROOMS											
D	WALKWAY LIGHTS	HAL-6	HKL-6									
E	WALKWAY LIGHTS											

REMOTE OVERRIDE CONTROL STATION

BLDG.	SWITCH LOCATED IN	ZONES CONTROLLED	CONDUIT / WIRE TO CONTROL PANEL	SWITCH IDENTIFICATION
BLDG '11'	CUSTODIAN ROOM	ALL ZONES INDIVIDUALLY	SEE NOTE 14 15 16 17	SLV-11
		A,B,C,D,E,F,G,H,S,T		

#21087
STAMPS
6/21/2022 9:08:26 AM

IDENTIFICATION STAMP
DIV. OF THE STATE ARCHITECT
APP: 04-120895 INC:
REVIEWED FOR
SS ☑ FLS ☑ ACS ☑
DATE: 06/27/2022
FOR TRACKING PURPOSES ONLY

JOHNSON CONSULTING ENGINEERS, INC.
Power | Lighting | Multimedia
Communications | Data Networking
12875 Brookprinter Place, Suite 300
Poway, CA 92064
P 858.679.4030 | F 858.513.0559
www.jce-inc.com
CONSULTANT BRANDING

RUHNAU CLARKE ARCHITECTS

GHS KITCHEN & WEIGHTROOM MOD:

PROJECT No. :1-30-55
6/21/2022 9:08:26 AM

DRAWN BY: CHECKED BY:
ISSUE No.____ DATE____ DESCRIPTION____
ISSUE No.____ DATE____ DESCRIPTION____
ISSUE No.____ DATE____ DESCRIPTION____
ISSUE No.____ DATE____ DESCRIPTION____
REVISION No.____ DATE____ DESCRIPTION____
REVISION No.____ DATE____ DESCRIPTION____
REVISION No.____ DATE____ DESCRIPTION____
REVISION No.____ DATE____ DESCRIPTION____

RUHNAUCLARKE.COM
3775 TENTH STREET, RIVERSIDE CALIFORNIA 92501(951) 684 4664 / 5751 PALMER WAY, SUITE C, CARLSBAD CALIFORNIA 92010(760) 438 5899

GHS KITCHEN & WEIGHTROOM MOD
GROSSMONT HIGH SCHOOL
1100 MURRAY DR, EL CAJON, CA 92020
GROSSMONT UNION HIGH SCHOOL

LIGHTING CONTROL DIAGRAM

E2.4

1-30-55

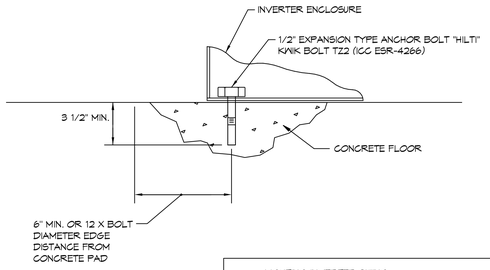

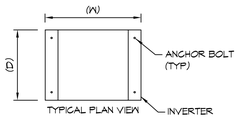

LIGHTING INVERTER SIZING	WIDTH (W)	DEPTH (D)	HEIGHT (H)	WEIGHT (MAX)
D	26"	10"	50"	607#

LIGHTING INVERTER ANCHORAGE (2 / E2.5)
NO SCALE

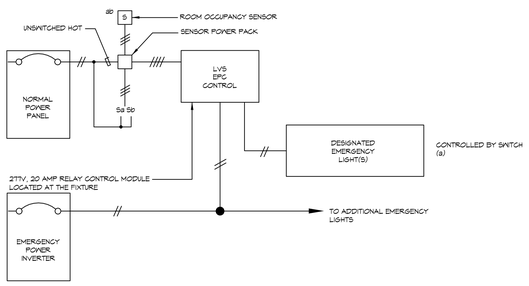

FIXTURE WIRING DIAGRAM (ROOM SENSOR AND/OR LOCAL SWITCH) (3 / E2.5)
NO SCALE

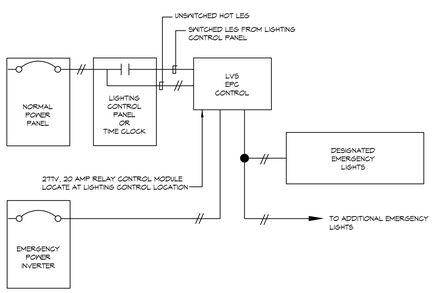

FIXTURE WIRING DIAGRAM (LOW VOLTAGE CONTROL SYSTEM) (4 / E2.5)
NO SCALE

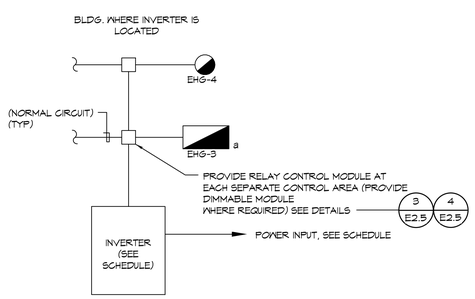

INVERTER CONFIGURATION DIAGRAM (5 / E2.5)
NO SCALE

INTERIOR NEMA1 SINGLE PHASE							
		INPUT BREAKER		OUTPUT BREAKER			
TYPE I.D.	KVA	120V SIZE/LOAD	277V SIZE/LOAD	MAXIMUM SPACE	CABINET SIZE	BTU OUTPUT	WEIGHT LBS
INV15	1.5	30/1,900	15/1,900	4-20AMP-1 POLE	C	102	494

PROJECT INVERTER SCHEDULE			
INVERTER LOCATION	INVERTER NAME	INVERTER TYPE	NOTES
KITCHEN BLDG IDF ROOM	INVK	INV15	REFERENCE FLOOR/SITE PLANS FOR NUMBER OF CIRCUITS REQUIRED.
900 BLDG IDF ROOM	INVN	INV15	REFERENCE FLOOR/SITE PLANS FOR NUMBER OF CIRCUITS REQUIRED.

GENERAL NOTES:

1. ALL DIMENSIONS INDICATED ARE BASED ON PRODUCTS MADE BY 'MYERS EMERGENCY POWER SYSTEMS'. ALTERNATE PRODUCTS MAY NOT EXCEED DIMENSIONS OR WEIGHTS INDICATED.
2. REFERENCE (2 / E2.5) FOR ANCHORAGE DETAIL.
3. REFERENCE (3 / E2.5) FOR TYPICAL WIRING DIAGRAM FOR ROOM CONTROLS.
4. REFERENCE (4 / E2.5) FOR TYPICAL WIRING DIAGRAM FOR LOW VOLTAGE RELAY CONTROLS.
5. REFERENCE (5 / E2.5) FOR TYPICAL RELAY MODULE WIRING DIAGRAM.

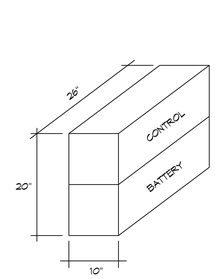

CABINET 'A'

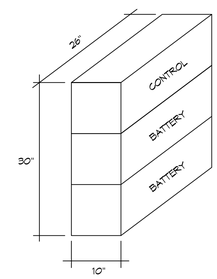

CABINET 'B'

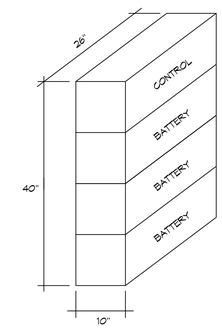

CABINET 'C'

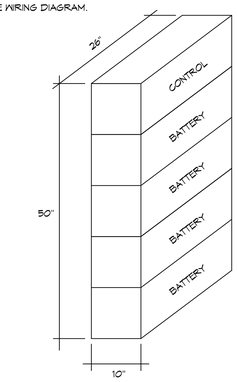

CABINET 'D'

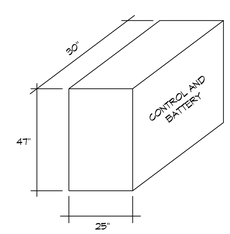

CABINET 'E'

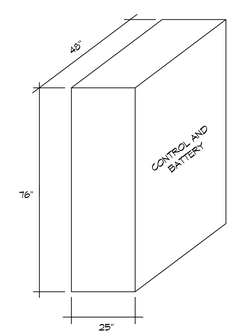

CABINET 'F'

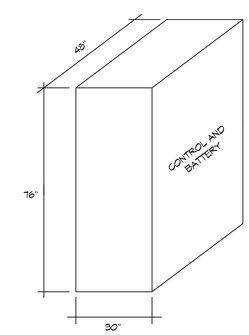

CABINET 'G'

INVERTER SIZING AND DETAILS (1 / E2.5)
NO SCALE

#21087
STAMPS
6/21/2022 9:08:28 AM

IDENTIFICATION STAMP
DIV. OF THE STATE ARCHITECT
APP: 04-120895 INC:
REVIEWED FOR
SS ☑ FLS ☑ ACS ☑
DATE: 06/27/2022
AGENCY
FILE NUMBER

JOHNSON CONSULTING ENGINEERS, INC.
Power | Lighting | Multimedia
Communications | Data Networking
12875 Brookprinter Place, Suite 300
Poway, CA 92064
P 858.679.4030 | F 858.513.0559
www.jce-inc.com
CONSULTANT BRANDING

RUHNAU CLARKE ARCHITECTS

GHS KITCHEN & WEIGHTROOM MOD:

PROJECT No. :1-30-55
6/21/2022 9:08:28 AM

DRAWN BY: CHECKED BY:

ISSUE No.____	DATE_____	DESCRIPTION_____	REVISION No.____	DATE_____	DESCRIPTION_____
ISSUE No.____	DATE_____	DESCRIPTION_____	REVISION No.____	DATE_____	DESCRIPTION_____
ISSUE No.____	DATE_____	DESCRIPTION_____	REVISION No.____	DATE_____	DESCRIPTION_____
ISSUE No.____	DATE_____	DESCRIPTION_____	REVISION No.____	DATE_____	DESCRIPTION_____

RUHNAUCLARKE.COM
3775 TENTH STREET, RIVERSIDE CALIFORNIA 92501(951) 684 4664 / 5751 PALMER WAY, SUITE C, CARLSBAD CALIFORNIA 92010(760) 438 5899

GHS KITCHEN & WEIGHTROOM MOD
GROSSMONT HIGH SCHOOL
1100 MURRAY DR, EL CAJON, CA 92020
GROSSMONT UNION HIGH SCHOOL

EMERGENCY LIGHTING DETAILS

E2.5

1-30-55

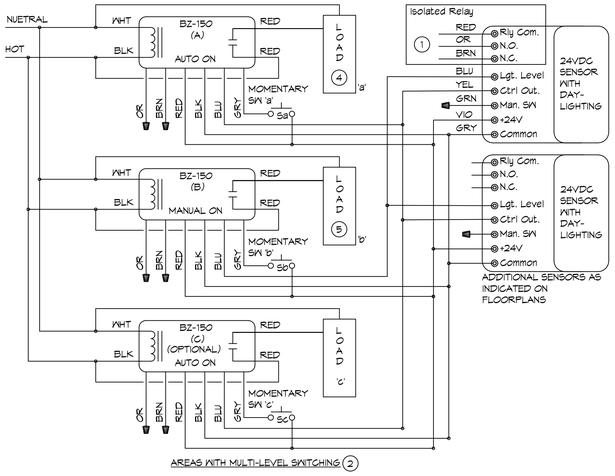

AREAS WITH MULTI-LEVEL SWITCHING (2)

GENERAL NOTES:

1. PROVISIONS FOR FUTURE HVAC SYSTEM LOW VOLTAGE CONTROL POWER CONNECTION
2. THIS DIAGRAM APPLIES TO ALL AREAS WHERE THESE SYMBOLS OCCUR. SEE FLOOR PLANS FOR LOCATION.
3. THIS DIAGRAM APPLIES TO ALL AREAS WHERE THESE SYMBOLS OCCUR. SEE FLOOR PLANS FOR LOCATION.
4. FOR 3 LAMP FIXTURES SWITCH 'a' SHALL BE AN OVERRIDE SWITCH FOR THE TWO OUTSIDE LAMPS IN CEILING FLUORESCENT FIXTURES. SEE FLOOR PLANS FOR OTHER SWITCHING REQ.
5. FOR 3 LAMP FIXTURES SWITCH 'b' SHALL BE AN OVERRIDE SWITCH FOR THE CENTER LAMP. SET LIGHT LEVEL SENSITIVITY TO 50 FC, LIGHT TO REMAIN OFF WHEN AMBIENT LIGHT IS ABOVE 50 FC.

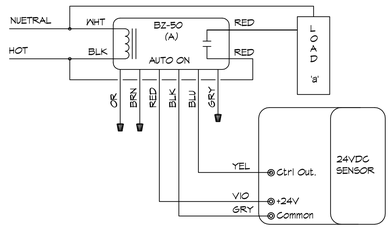

AREAS WITH OCCUPANCY SENSOR ONLY (3)

GENERAL NOTES:

1. FIELD WIRE SENSOR FOR THE FOLLOWING: "LIGHTS ON" - BY EITHER TECHNOLOGY "REMAIN ON" - BY BOTH TECHNOLOGIES "LIGHTS OFF" - BY BOTH TECHNOLOGIES

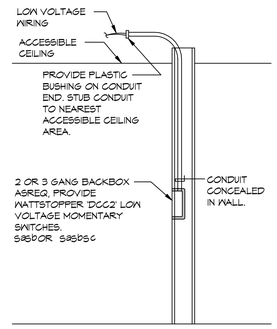

SWITCH INSTALLATION DETAIL

OCCUPANCY SENSOR CONTROL DIAGRAM (1 / E2.6)

NO SCALE

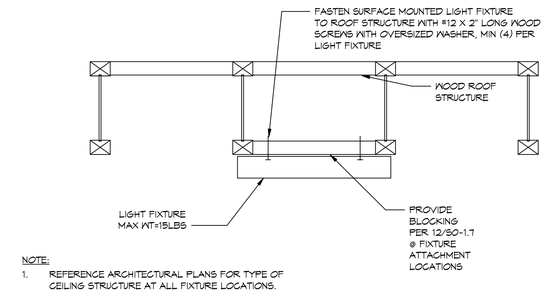

NOTE:

1. REFERENCE ARCHITECTURAL PLANS FOR TYPE OF CEILING STRUCTURE AT ALL FIXTURE LOCATIONS.

SURFACE MOUNTED FIXTURE MOUNTING DETAIL (2 / E2.6)

NO SCALE

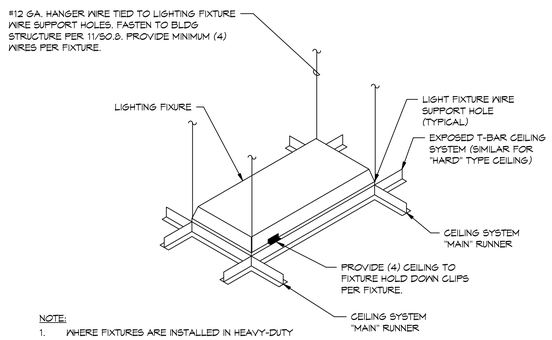

NOTE:

1. WHERE FIXTURES ARE INSTALLED IN HEAVY-DUTY TYPE LAY-IN CEILINGS AND THE TOTAL WEIGHT OF THE FIXTURE IS LESS THAN 56 LBS. REDUCE THE QUANTITY OF HANGER WIRES TO (2) BLACK WIRES AT DIAGONAL CORNERS.
2. REFERENCE ARCHITECTURAL PLANS FOR ADDITIONAL CEILING ANCHORAGE REQUIREMENTS.

FLUORESCENT FIXTURE SEISMIC RESTRAINT DETAIL (3 / E2.6)

NO SCALE

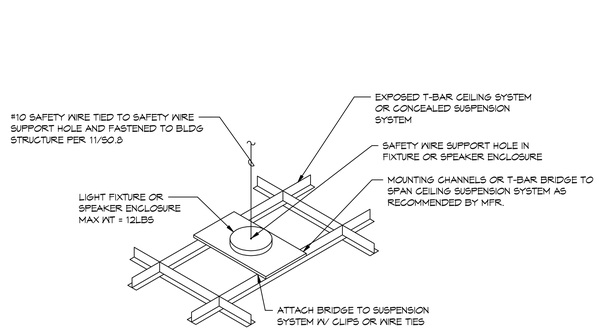

LUMINAIRE AND SPEAKER ENCLOSURE SEISMIC RESTRAINT DETAIL (4 / E2.6)

NO SCALE

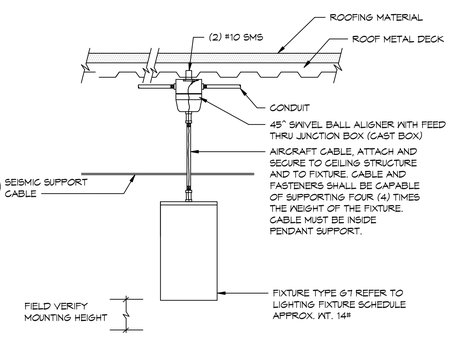

PENDANT MOUNTED LIGHTING FIXTURE DETAIL (5 / E2.6)

NO SCALE

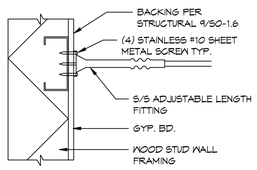

WALL ATTACHMENT (A)

NO SCALE

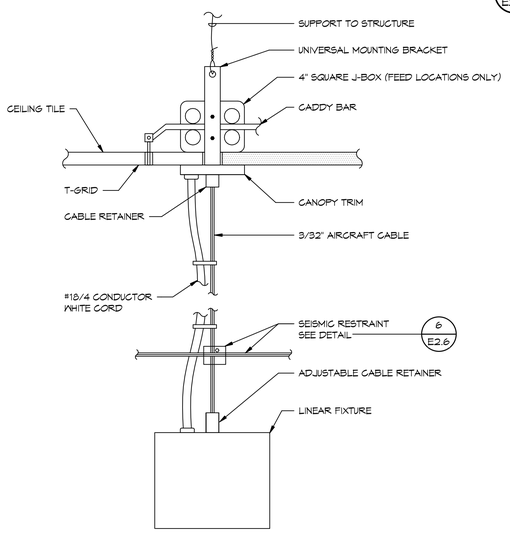

PENDANT HUNG LINEAR FIXTURE MOUNTING (7 / E2.6)

NO SCALE

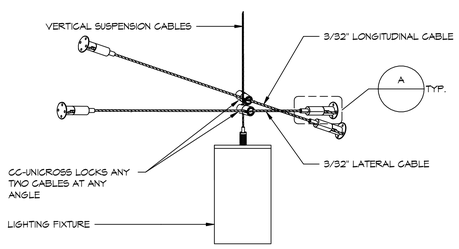

PENDANT HUNG FIXTURE SEISMIC RESTRAINT (6 / E2.6)

NO SCALE

#21087 STAMPS 6/21/2022 9:08:30 AM

IDENTIFICATION STAMP
DIV. OF THE STATE ARCHITECT
APP: 04-120895 INC:
REVIEWED FOR
SS ☑ FLS ☑ ACS ☑
DATE: 06/27/2022

JOHNSON CONSULTING ENGINEERS, INC.
Power | Lighting | Multimedia
Communications | Data Networking
12875 Brookprinter Place, Suite 300
Poway, CA 92064
P 858.679.4030 | F 858.513.0559
www.jce-inc.com

RUHNAU CLARKE ARCHITECTS

GHS KITCHEN & WEIGHTROOM MOD:

PROJECT No. :1-30-55
6/21/2022 9:08:30 AM

DRAWN BY: CHECKED BY:

ISSUE No.	DATE	DESCRIPTION	REVISION No.	DATE	DESCRIPTION
ISSUE No.	DATE	DESCRIPTION	REVISION No.	DATE	DESCRIPTION
ISSUE No.	DATE	DESCRIPTION	REVISION No.	DATE	DESCRIPTION
ISSUE No.	DATE	DESCRIPTION	REVISION No.	DATE	DESCRIPTION

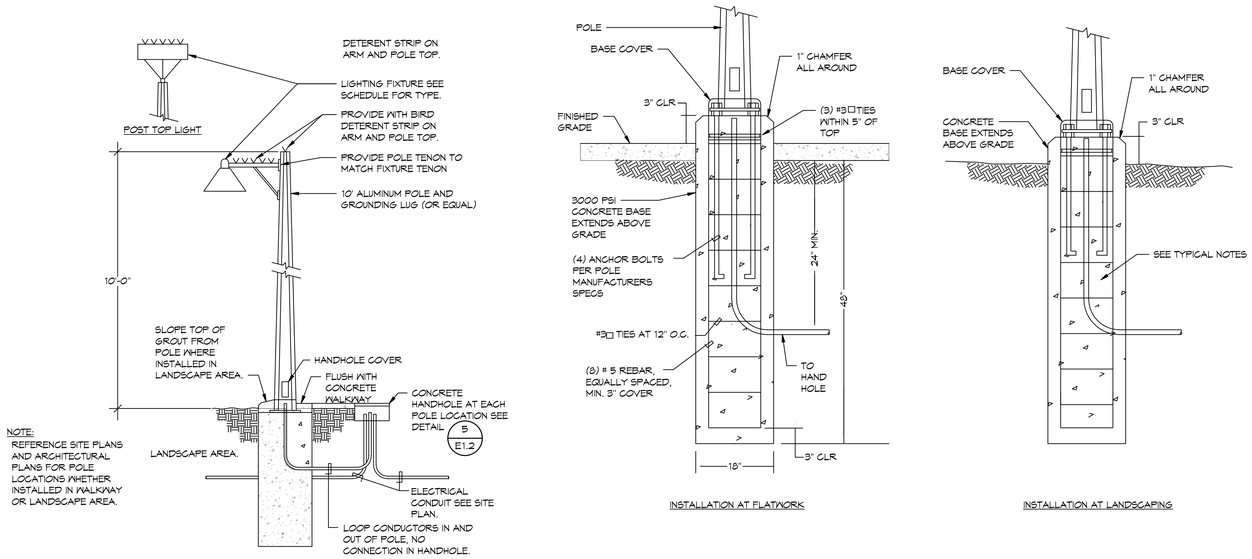

CONCRETE POLE DETAIL (NOT FOR DSA REVIEW) 1 E2.7

NO SCALE

#21087 6/21/2022 9:08:31 AM

IDENTIFICATION STAMP
DIV. OF THE STATE ARCHITECT
APP: 04-120895 INC:
REVIEWED FOR
SS ☑ FLS ☑ ACS ☑
DATE: 06/27/2022

JOHNSON CONSULTING ENGINEERS, INC.
Power | Lighting | Multimedia
Communications | Data Networking
12875 Brookprinter Place, Suite 300
Poway, CA 92064
P 858.679.4030 | F 858.513.0559
www.jce-inc.com

RUHNAU CLARKE ARCHITECTS

GHS KITCHEN & WEIGHTROOM MOD:

PROJECT No. :1-30-55
6/21/2022 9:08:31 AM

DRAWN BY: CHECKED BY:
ISSUE No. DATE DESCRIPTION
ISSUE No. DATE DESCRIPTION
ISSUE No. DATE DESCRIPTION
ISSUE No. DATE DESCRIPTION
REVISION No. DATE DESCRIPTION
REVISION No. DATE DESCRIPTION
REVISION No. DATE DESCRIPTION
REVISION No. DATE DESCRIPTION

RUHNAUCLARKE.COM
3775 TENTH STREET, RIVERSIDE CALIFORNIA 92501 (951) 684 4664 / 5751 PALMER WAY, SUITE C, CARLSBAD CALIFORNIA 92010 (60) 438 5899

GHS KITCHEN & WEIGHTROOM MOD
GROSSMONT HIGH SCHOOL
1100 MURRAY DR, EL CAJON, CA 92020
GROSSMONT UNION HIGH SCHOOL

LIGHTING DETAILS

E2.7

1-30-55

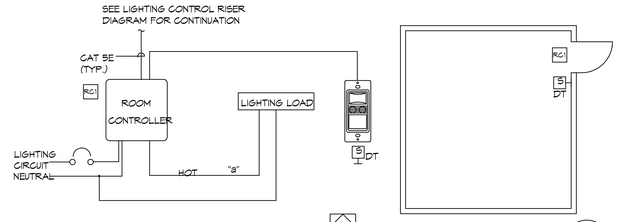

TYPICAL ROOM TYPE - STORAGE/RESTROOM (A)

NO SCALE

1 / E2.8

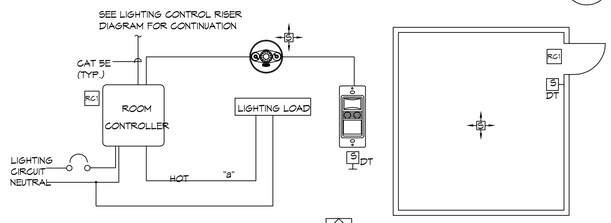

TYPICAL ROOM TYPE - STORAGE/RESTROOM (B)

NO SCALE

2 / E2.8

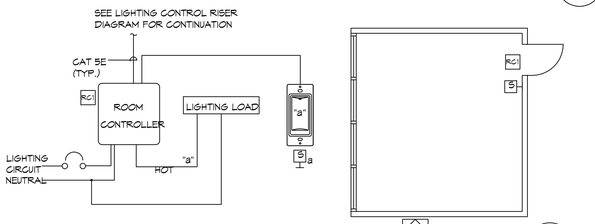

TYPICAL ROOM TYPE - ELECTRICAL/EQUIPMENT ROOM (D)

NO SCALE

3 / E2.8

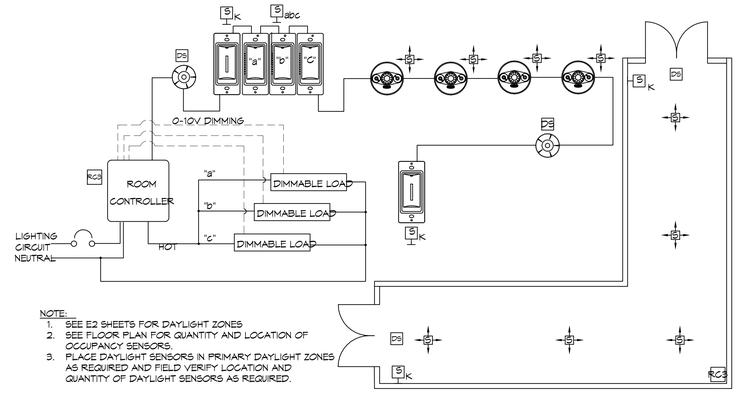

NOTE:
1. SEE E2 SHEETS FOR DAYLIGHT ZONES
2. SEE FLOOR PLAN FOR QUANTITY AND LOCATION OF OCCUPANCY SENSORS.
3. PLACE DAYLIGHT SENSORS IN PRIMARY DAYLIGHT ZONES AS REQUIRED AND FIELD VERIFY LOCATION AND QUANTITY OF DAYLIGHT SENSORS AS REQUIRED.

TYPICAL ROOM TYPE - CORRIDOR (N)

NO SCALE

9 / E2.8

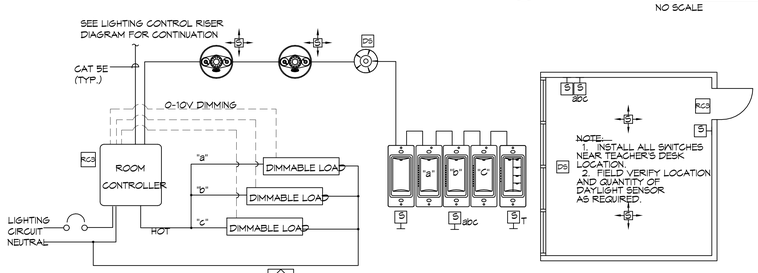

TYPICAL ROOM TYPE - CLASSROOM (G)

NO SCALE

4 / E2.8

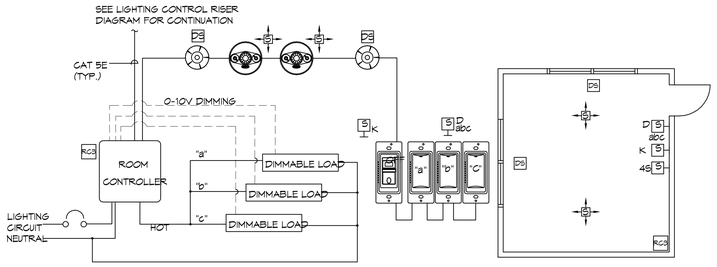

NOTE:
1. SEE LIGHTING FLOOR PLAN FOR LOCATION ADN QUANTITY OF OCCUPANCY SENSORS.
2. FIELD VERIFY EXACT LOCATION OF ROOM CONTROLLER PRIOR TO ROUGH-IN. LOCATION SHALL BE ACCESSIBLE.

TYPICAL ROOM TYPE - MPR (M)

NO SCALE

10 / E2.8

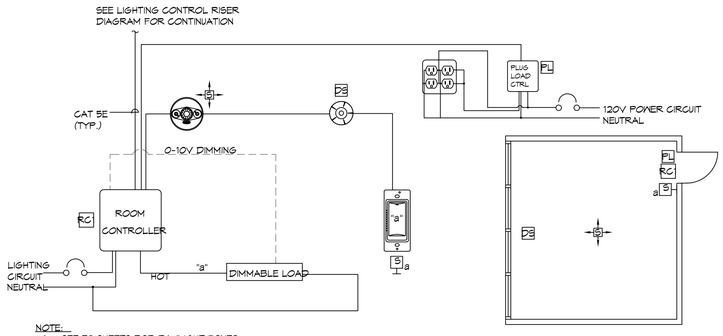

NOTE:
1. SEE E2 SHEETS FOR DAYLIGHT ZONES
2. SEE FLOOR PLAN FOR QUANTITY AND LOCATION OF OCCUPANCY SENSORS

TYPICAL ROOM TYPE - OFFICE W/ 1 ZONE (J)

NO SCALE

5 / E2.8

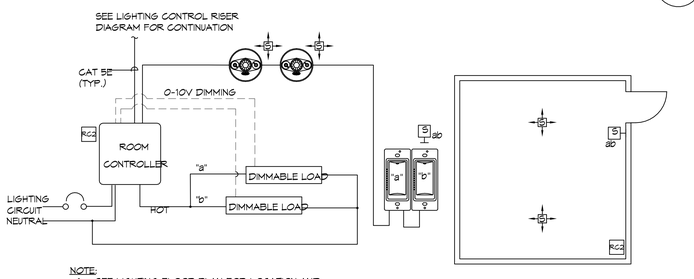

NOTE:
1. SEE LIGHTING FLOOR PLAN FOR LOCATION AND QUANTITY OF OCCUPANCY SENSORS.

TYPICAL ROOM TYPE - KITCHEN/MPR STAGE (M1)

NO SCALE

11 / E2.8

SYMBOL LENGEND

S	WALL MOUNTED MANUAL ON AND OFF SWITCH +48" U.O.N.
S DT	WALL MOUNTED DUAL TECH OCCUPANCY SENSOR WITH MANUAL ON AND OFF 48" U.O.N.
S	CEILING MOUNTED OCCUPANCY SENSOR (DUAL TECHNOLOGY)
S	WALL MOUNTED OCCUPANCY SENSOR (DUAL TECH) +84" U.O.N.
RC1	SINGLE CIRCUIT ROOM CONTROLLER FOR ROOMS WITH ONE DIMMING ZONE.
RC2	SINGLE CIRCUIT ROOM CONTROLLER FOR ROOMS WITH TWO DIMMING ZONES.
RC3	SINGLE CIRCUIT ROOM CONTROLLER FOR ROOMS WITH THREE DIMMING ZONES.
PL	PLUG LOAD CONTROLLER
DS	DAYLIGHT SENSOR
S 4S	4 SCENE DIMMING CONTROL STATION
S K	MANUAL ON AND OFF KEY SWITCH
S a	MAIN ENTRY MANUAL ON AND OFF WITH DIMMER FOR ZONE 'a'
S ab	MAIN ENTRY MANUAL ON AND OFF WITH DIMMER FOR ZONE 'a'&'b'
S abc	MAIN ENTRY MANUAL ON AND OFF WITH DIMMER FOR ZONE 'a'&'b'&'c'
S abc	MAIN ENTRY MANUAL DIMMERS FOR ZONE 'a', 'b' & 'c'

GENERAL NOTES

1. REFERENCE SPECIFICATION SECTION 260923 DIGITAL LIGHTING CONTROL SYSTEM FOR ADDITIONAL SCOPE OF WORK.
2. ITEMS RC1 RC2 RC3 PL TO BE WALL MOUNTED ABOVE THE ROOM ENTRY DOOR, ABOVE THE CEILING IN ALL ROOMS WITH T-BAR CEILINGS.
3. ITEMS RC1 RC2 RC3 PL TO BE LOCATED WITHIN A 24" x 24" RECESSED ENCLOSURE WITH HINGED LOCKING COVER LOCATED ABOVE THE ROOM ENTRY DOOR IN ALL ROOMS WITH INACCESSIBLE CEILINGS.
4. ALL 0-10V WIRING AND CAT 5E WIRING MAY BE INSTALLED AS OPEN WIRE WHERE ABOVE ACCESSIBLE CEILINGS. WHERE ABOVE INACCESSIBLE OR EXPOSED CEILINGS IT SHALL BE INSTALLED IN CONDUIT.
5. S WHERE CEILING HEIGHT EXCEED 11'-0" OR ROOM HAS EXPOSED CEILING PROVIDE S TYPE SENSOR MOUNTED ON WALL IN PLACE OF CEILING SENSOR.
6. REFERENCE 5 / E2.5 FOR LIGHTING ON EMERGENCY SYSTEM.

REGISTERED PROFESSIONAL ENGINEER JEFF CLARKE NO.E 14781 Exp. 9-30-2023 ELECTRICAL STATE OF CALIFORNIA

LICENSED ARCHITECT TODDER CLARKE No. C-21340 Exp. 12-31-2023 STATE OF CALIFORNIA

#21087
STAMPS

6/21/2022 9:08:33 AM

IDENTIFICATION STAMP
DIV. OF THE STATE ARCHITECT
APP: 04-120895 INC:
REVIEWED FOR
SS ☑ FLS ☑ ACS ☑
DATE: 06/27/2022
AS NOTED
FOR TRACKING PURPOSES ONLY

JOHNSON CONSULTING ENGINEERS, INC.
Power | Lighting | Multimedia
Communications | Data Networking
12875 Brookprinter Place, Suite 300
Poway, CA 92064
P 858.679.4030 | F 858.513.0559
www.jce-inc.com
CONSULTANT BRANDING

RUHNAU CLARKE ARCHITECTS

GHS KITCHEN & WEIGHTROOM MOD:

PROJECT No. :1-30-55
6/21/2022 9:08:33 AM

DRAWN BY: CHECKED BY:

ISSUE No.____	DATE_____	DESCRIPTION_____	REVISION No.____	DATE_____	DESCRIPTION_____
ISSUE No.____	DATE_____	DESCRIPTION_____	REVISION No.____	DATE_____	DESCRIPTION_____
ISSUE No.____	DATE_____	DESCRIPTION_____	REVISION No.____	DATE_____	DESCRIPTION_____
ISSUE No.____	DATE_____	DESCRIPTION_____	REVISION No.____	DATE_____	DESCRIPTION_____

RUHNAUCLARKE.COM
3775 TENTH STREET, RIVERSIDE CALIFORNIA 92501(951) 684 4664 / 5751 PALMER WAY, SUITE C, CARLSBAD CALIFORNIA 92010(760) 438 5899

GHS KITCHEN & WEIGHTROOM MOD
GROSSMONT HIGH SCHOOL
1100 MURRAY DR, EL CAJON, CA 92020
GROSSMONT UNION HIGH SCHOOL

LIGHTING CONTROL DIAGRAMS

E2.8

1-30-55

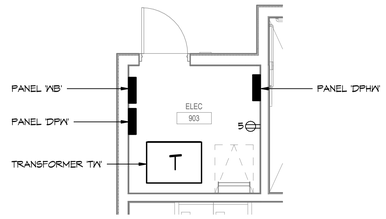

ENLARGED ELECTRICAL 151 ROOM PLAN | SCALE: 1/4" = 1'-0" | REF.: 1/E3.1 | 2

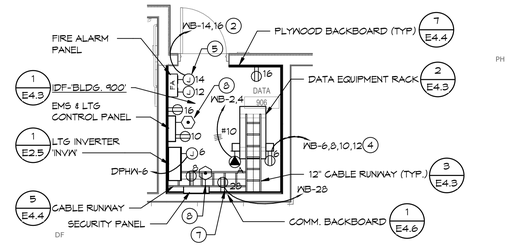

ENLARGED IDF 906 ROOM PLAN | SCALE: 1/4" = 1'-0" | REF.: 1/E3.1 | 3

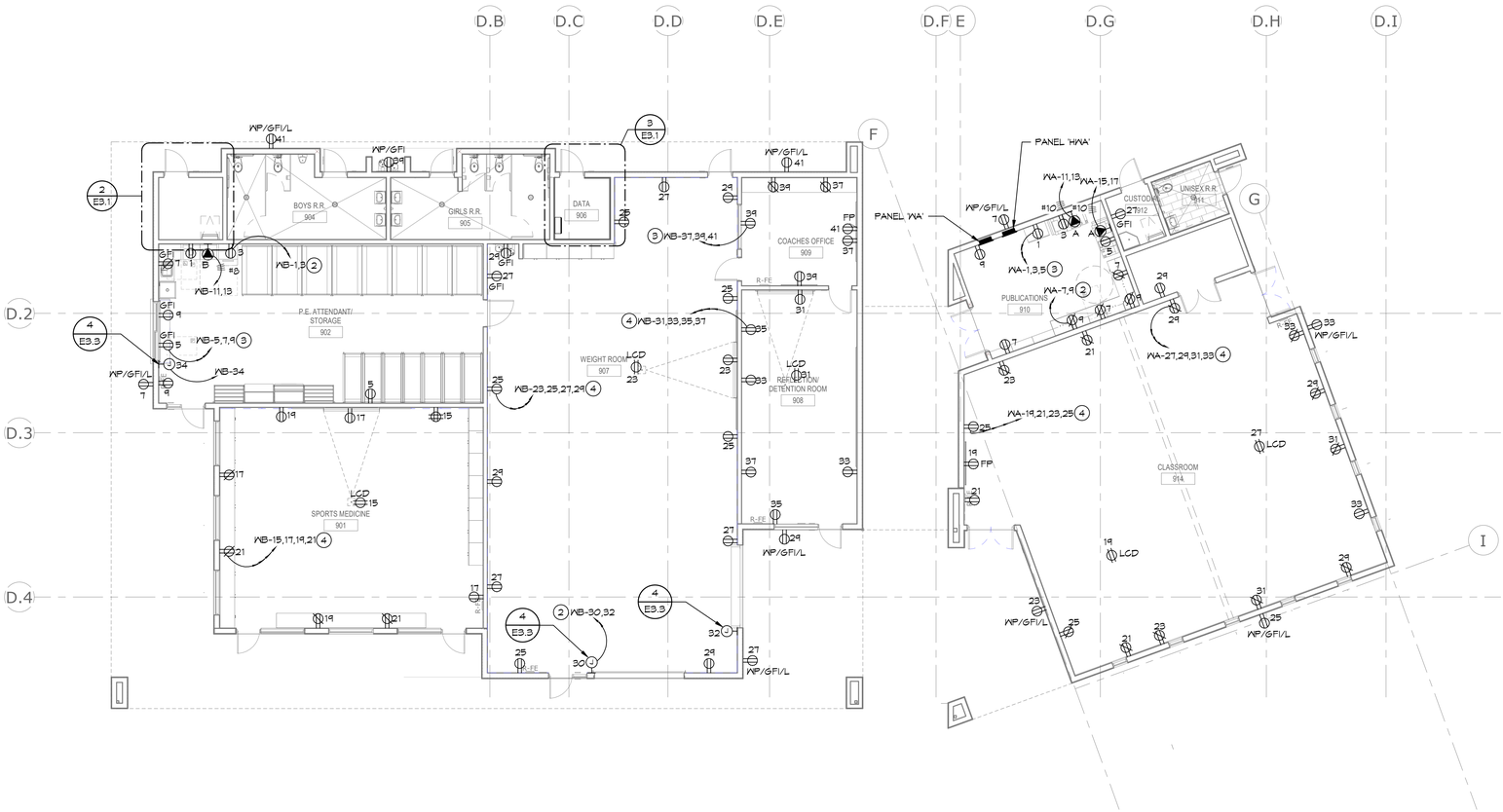

BLDG 900 FLOOR PLAN - POWER | SCALE: 1/8" = 1'-0" | REF.: / | 1

GENERAL NOTES:

1. REFERENCE ARCHITECTURAL INTERIOR ELEVATIONS FOR EXACT LOCATION OF ALL WALL MOUNTED POWER DEVICES WHERE INDICATED AT MOUNTING HEIGHTS OTHER THAN +18".
2. REFERENCE SHEET E6 SERIES SHEETS FOR MECHANICAL EQUIPMENT SCHEDULE.
3. REFERENCE E3 AND E6 SERIES SHEETS FOR TYPICAL CONDUIT AND BACKBOX INSTALLATION DETAILS.
4. NUMBERS ADJACENT TO EACH POWER DEVICE INDICATES THE CIRCUIT NUMBER TO WHICH THE DEVICE IS TO BE CONNECTED.
5. CIRCUIT HOMERUNS ARE INDICATED TO SHOW THE LOCATION AND NUMBER OF CIRCUITS TO BE GROUPED TOGETHER.
6. PROVIDE MINIMUM 3/4" CONDUIT AND #12 CIRCUIT CONDUCTORS AS REQUIRED TO CONNECT EACH POWER DEVICE TO THEIR INDICATED CIRCUIT (U.O.N.).
7. FIELD VERIFY EXACT ROUTING LOCATION FOR CONCEALED CONDUITS AND RECEPTACLES PRIOR TO ROUGH-IN.

KEY NOTES:

1. FIELD VERIFY EXACT LOCATION PRIOR TO ROUGH-IN.
2. 2 #12 (HOT), 1 #10 (NEUTRAL), 1 #12 (GND), 3/4"C.
3. 3 #12 (HOT), 1 #10 (NEUTRAL), 1 #12 (GND), 3/4"C.
4. 4 #12 (HOT), 2 #10 (NEUTRAL), 1 #12 (GND), 3/4"C.
5. EXTEND CIRCUIT WB-14 TO ALL FIRE SMOKE DAMPERS. SEE E5 SERIES FLOOR PLANS FOR EXACT QUANTITIES AND LOCATIONS OF DAMPERS.
6. NOT USED
7. ELECTRICAL OUTLET FOR COMMUNICATIONS BACKBOARD @+42" AFF (U.O.N.).
8. DATA OUTLET AT CONTROL PANEL. COORDINATE WITH LOW VOLTAGE SYSTEM CONTRACTOR FOR PLACEMENT.

#21087 STAMPS
6/21/2022 9:08:38 AM

IDENTIFICATION STAMP
DIV. OF THE STATE ARCHITECT
APP: 04-120895 INC:
REVIEWED FOR
SS ☑ FLS ☑ ACS ☑
DATE: 06/27/2022
ADD'L REQ'D

JOHNSON CONSULTING ENGINEERS, INC.
Power | Lighting | Multimedia
Communications | Data Networking
12875 Brookprinter Place, Suite 300
Poway, CA 92064
P 858.679.4030 | F 858.513.0559
www.jce-inc.com
CONSULTANT BRANDING

RUHNAU CLARKE ARCHITECTS

GHS KITCHEN & WEIGHTROOM MOD:

PROJECT No. :1-30-55
6/21/2022 9:08:38 AM

DRAWN BY: CHECKED BY:

ISSUE No.	DATE	DESCRIPTION
ISSUE No.	DATE	DESCRIPTION
ISSUE No.	DATE	DESCRIPTION
ISSUE No.	DATE	DESCRIPTION

REVISION No.	DATE	DESCRIPTION
REVISION No.	DATE	DESCRIPTION
REVISION No.	DATE	DESCRIPTION
REVISION No.	DATE	DESCRIPTION

RUHNAUCLARKE.COM
3775 TENTH STREET, RIVERSIDE CALIFORNIA 92501 (951) 684 4664 / 5751 PALMER WAY, SUITE C, CARLSBAD CALIFORNIA 92010 (760) 438 5899

GHS KITCHEN & WEIGHTROOM MOD
GROSSMONT HIGH SCHOOL
1100 MURRAY DR, EL CAJON, CA 92020
GROSSMONT UNION HIGH SCHOOL

BLDG 900 FLOOR PLAN - POWER

E3.1

1-30-55

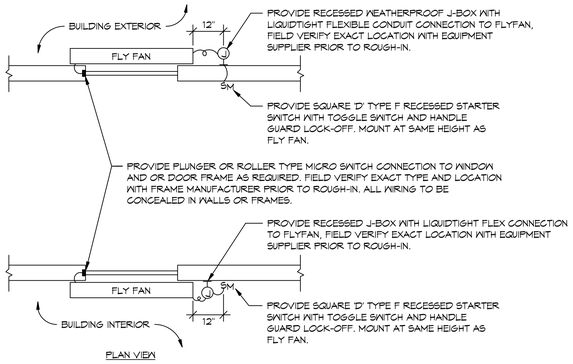

NOTES:

1. REFERENCE KITCHEN AND OR MECHANICAL PLANS FOR FAN LOCATIONS, AND REFERENCE ARCHITECTURAL PLANS FOR DOOR OR WINDOW TYPE.

FLY FAN CONNECTION DETAIL

NO SCALE

2 / E3.2

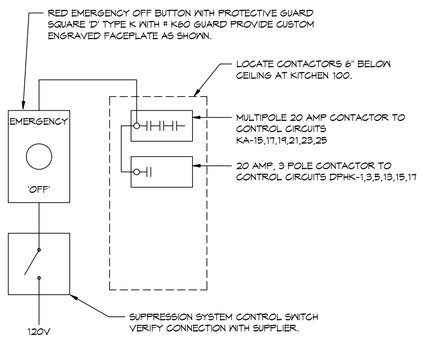

KITCHEN EMERGENCY SHUTOFF DIAGRAM HOOD

NO SCALE

3 / E3.2

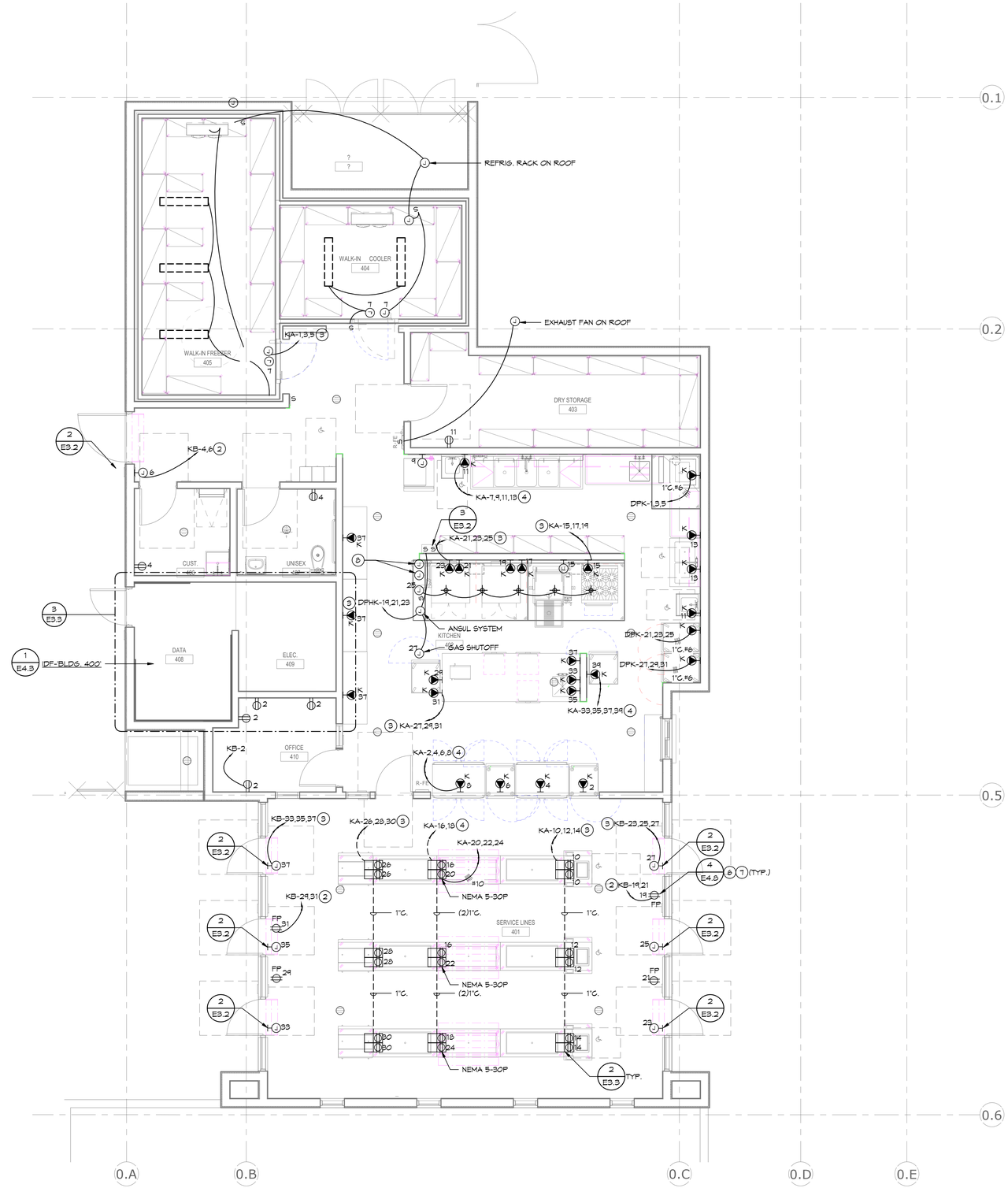

KITCHEN FLOOR PLAN - POWER

SCALE: 1/4" = 1'-0"

REF: /

1

NORTH

GENERAL NOTES:

1. REFERENCE FOODSERVICE DRAWINGS FOR ALL DEVICE HEIGHTS.
2. ALL GENERAL USE RECEPTACLES SHALL BE GFCI TYPE IN KITCHEN AREAS.
3. VERIFY ALL LOCATIONS AND REQUIREMENTS WITH FOODSERVICE DRAWINGS.
4. REFER TO FOODSERVICE DRAWINGS FOR ADDITIONAL ELECTRICAL REQUIREMENTS.
5. REFERENCE ARCHITECTURAL INTERIOR ELEVATIONS FOR EXACT LOCATION OF ALL WALL MOUNTED POWER DEVICES WHERE INDICATED AT MOUNTING HEIGHTS OTHER THAN +18".
6. REFERENCE SHEET E6 SERIES SHEETS FOR MECHANICAL EQUIPMENT SCHEDULE.
7. REFERENCE E3 AND E6 SERIES SHEETS FOR TYPICAL CONDUIT AND BACKBOX INSTALLATION DETAILS.
8. NUMBERS ADJACENT TO EACH POWER DEVICE INDICATES THE CIRCUIT NUMBER TO WHICH THE DEVICE IS TO BE CONNECTED.
9. CIRCUIT HOMERUNS ARE INDICATED TO SHOW THE LOCATION AND NUMBER OF CIRCUITS TO BE GROUPED TOGETHER.
10. PROVIDE MINIMUM 3/4" CONDUIT AND #12 CIRCUIT CONDUCTORS AS REQUIRED TO CONNECT EACH POWER DEVICE TO THEIR INDICATED CIRCUIT (U.O.N.).

KEY NOTES:

1. FIELD VERIFY EXACT LOCATION PRIOR TO ROUGH-IN.
2. 2 #12 (HOT), 1 #10 (NEUTRAL), 1 #12 (GND), 3/4"C.
3. 3 #12 (HOT), 1 #10 (NEUTRAL), 1 #12 (GND), 3/4"C.
4. 4 #12 (HOT), 2 #10 (NEUTRAL), 1 #12 (GND), 3/4"C.
5. FIELD VERIFY EXACT ROUTING LOCATION FOR CONCEALED CONDUITS AND RECEPTACLES PRIOR TO ROUGH-IN.
6. PROVIDE RECEPTACLE MOUNTED FLUSH IN CEILING.
7. REFER TO MENU BOARD FLAT PANEL DETAIL FOR ELECTRICAL OUTLET REQUIREMENTS AT CEILING MOUNTED FLAT PANEL — 4 / E4.8
8. PROVIDE POWER CONNECTION UP TO ROOF FOR EXHAUST FAN AND MUA. EXHAUST & MUA TO BE INTERLOCKED TO TURN ON WITH A SINGLE SWITCH. SEE ROOF PLANS FOR CIRCUITING INFORMATION FOR EXHAUST FAN AND MUA.

#21087
STAMPS

6/21/2022 9:08:41 AM

IDENTIFICATION STAMP
DIV. OF THE STATE ARCHITECT
APP: 04-120895 INC:
REVIEWED FOR
SS ☑ FLS ☑ ACS ☑
DATE: 06/27/2022

JOHNSON CONSULTING ENGINEERS, INC.
Power | Lighting | Multimedia
Communications | Data Networking
12875 Brookprinter Place, Suite 300
Poway, CA 92064
P 858.679.4030 | F 858.513.0559
www.jce-inc.com
CONSULTANT BRANDING

RUHNAU CLARKE ARCHITECTS

GHS KITCHEN & WEIGHTROOM MOD:

PROJECT No. :1-30-55
6/21/2022 9:08:41 AM

DRAWN BY: CHECKED BY:

ISSUE No.____ DATE____ DESCRIPTION____
ISSUE No.____ DATE____ DESCRIPTION____
ISSUE No.____ DATE____ DESCRIPTION____
ISSUE No.____ DATE____ DESCRIPTION____

REVISION No.____ DATE____ DESCRIPTION____
REVISION No.____ DATE____ DESCRIPTION____
REVISION No.____ DATE____ DESCRIPTION____
REVISION No.____ DATE____ DESCRIPTION____

RUHNAUCLARKE.COM
3775 TENTH STREET, RIVERSIDE CALIFORNIA 92501(951) 684 4664 / 5751 PALMER WAY, SUITE C, CARLSBAD CALIFORNIA 92010(760) 438 5899

GHS KITCHEN & WEIGHTROOM MOD
GROSSMONT HIGH SCHOOL
1100 MURRAY DR, EL CAJON, CA 92020
GROSSMONT UNION HIGH SCHOOL

KITCHEN FLOOR PLAN - POWER

E3.2

1-30-55

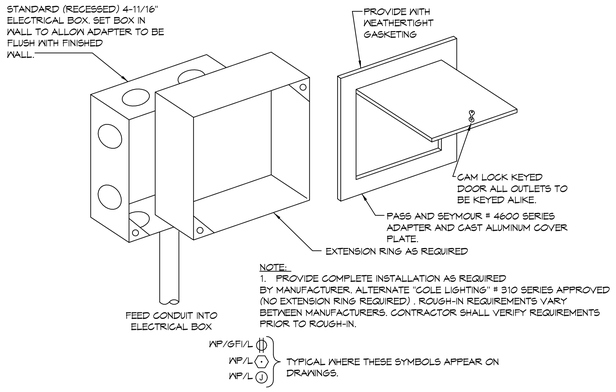

NOTE:
1. PROVIDE COMPLETE INSTALLATION AS REQUIRED BY MANUFACTURER. ALTERNATE "COLE LIGHTING" # 310 SERIES APPROVED (NO EXTENSION RING REQUIRED) . ROUGH-IN REQUIREMENTS VARY BETWEEN MANUFACTURERS. CONTRACTOR SHALL VERIFY REQUIREMENTS PRIOR TO ROUGH-IN.

TYPICAL WEATHERPROOF/LOCKING RECEPTACLE COVER

NO SCALE

1 / E3.3

NOTES:
1. PROVIDE FSR INC. #FL-710 SERIES FLOOR BOX 5" DEEP. SEE FLOOR PLAN FOR FLOOR BOX PLACEMENT.
2. FIELD VERIFY EDGING THICKNESS PRIOR TO INSTALLATION.
3. PROVIDE COVER WITH 1/4" ALUMINUM EDGE FLANGE WITH SCRUBWATER RATING MODEL #FL-710-SSQ-C. CONFIRM FLOORING TYPE PRIOR TO ORDERING.
4. PROVIDE SCRUB WATER RATED COVER FOR TILE AND POLISHED CONCRETE FLOOR LOCATIONS.

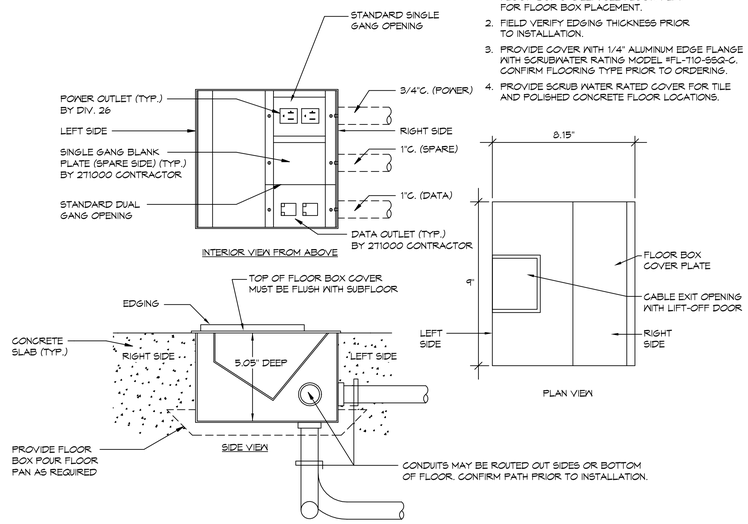

TYPICAL FLOOR BOX

NO SCALE

2 / E3.3

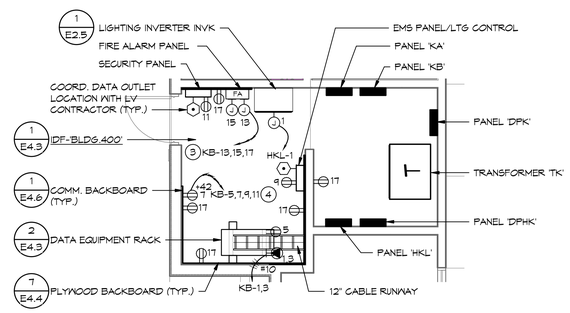

ENLARGED FLOOR PLAN - KITCHEN IDF/ELECTRICAL ROOMS

SCALE: 1/4" = 1'-0" REF: 1/E3.2 | 3

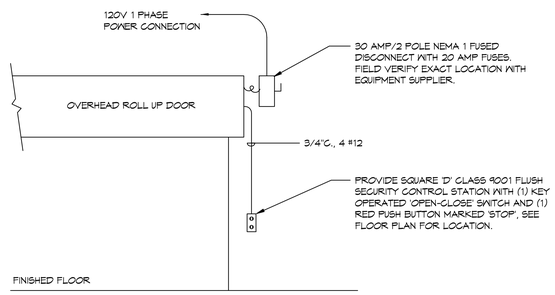

ROLL-UP WIRING DIAGRAM

NO SCALE

4 / E3.3

#21087 STAMPS 6/21/2022 9:08:44 AM

IDENTIFICATION STAMP
DIV. OF THE STATE ARCHITECT
APP: 04-120895 INC:
REVIEWED FOR
SS ☑ FLS ☑ ACS ☑
DATE: 06/27/2022
DSA
AS NOTED
FOR TRACKING PURPOSES ONLY

JOHNSON CONSULTING ENGINEERS, INC.
Power | Lighting | Multimedia
Communications | Data Networking
12875 Brookprinter Place, Suite 300
Poway, CA 92064
P 858.679.4030 | F 858.513.0559
www.jce-inc.com
CONSULTANT BRANDING

RUHNAU CLARKE ARCHITECTS

GHS KITCHEN & WEIGHTROOM MOD:

PROJECT No. :1-30-55
6/21/2022 9:08:44 AM

DRAWN BY: CHECKED BY:

ISSUE No.	DATE	DESCRIPTION	REVISION No.	DATE	DESCRIPTION
ISSUE No.	DATE	DESCRIPTION	REVISION No.	DATE	DESCRIPTION
ISSUE No.	DATE	DESCRIPTION	REVISION No.	DATE	DESCRIPTION
ISSUE No.	DATE	DESCRIPTION	REVISION No.	DATE	DESCRIPTION

RUHNAUCLARKE.COM
3775 TENTH STREET, RIVERSIDE CALIFORNIA 92501(951) 684 4664 / 5751 PALMER WAY, SUITE C, CARLSBAD CALIFORNIA 92010(760) 438 5899

GHS KITCHEN & WEIGHTROOM MOD
GROSSMONT HIGH SCHOOL
1100 MURRAY DR, EL CAJON, CA 92020
GROSSMONT UNION HIGH SCHOOL

POWER DETAILS

E3.3

1-30-55

BACKBOX AND RING LEGEND

TYPE	DESCRIPTION
'B1'	4 11/16" square 2 1/8" deep box with single gang ring.
'B2'	4 11/16" square 2 1/8" deep box with dual gang ring.
'B3'	4" square 1 1/2" deep box with single gang ring.
'B4'	Single gang box, 2 1/8" deep.
'B5'	4-11/16" Square 3" deep box with dual gang ring.

'C1'	Provided by 27 10 00 contractor.
'C3'	Provided by 27 20 00 contractor.
'C5'	Provided by 28 13 00 contractor.
'C6'	Provided by 28 23 00 contractor.
'C7'	Provided by xx xx xx contractor.

FACEPLATE LEGEND

TYPE	DESCRIPTION
'AR'	As required to accommodate the number of ports designated.
'BP'	Blank faceplate.
'BP/WP'	Blank faceplate - weather-proof with gasket.

'C1'	Provided by 27 10 00 contractor.
'C3'	Provided by 27 20 00 contractor.
'C5'	Provided by 28 13 00 contractor.
'C6'	Provided by 28 23 00 contractor.
'C7'	Provided by xx xx xx contractor.

CONDUIT / RACEWAY LEGEND

TYPE	DESCRIPTION
'3/4-S'	3/4" conduit stubbed from box into accessible ceiling space, unless detailed otherwise on drawings.
'1-S'	1" conduit stubbed from box into accessible ceiling space, unless detailed otherwise on drawings.
'11/4-S'	1 1/4" conduit stubbed from box into accessible ceiling space, unless detailed otherwise on drawings.

TECHNOLOGY SYMBOL LEGEND

SYMBOL	DESCRIPTION	BACKBOX & RING	FACE PLATE	CONDUIT / RACEWAY
	Single port data outlet, +18" A.F.F. (U.O.N.)	Type 'B1'	Type 'AR'	Type '1-S'
2P	Dual port data outlet, +18" A.F.F. (U.O.N.)	Type 'B1'	Type 'AR'	Type '1-S'
3P	Triple port data outlet, +18" A.F.F. (U.O.N.)	Type 'B1'	Type 'AR'	Type '1-S'
4P	Quad port data outlet, +18" A.F.F. (U.O.N.)	Type 'B1'	Type 'AR'	Type '1-S'
LO 2P (2)	Audio-visual local origination (AV) with dual port data outlet (D) @+18" A.F.F. (U.O.N.)	Type 'B1' (D/V) Type 'B5' (LO) side by side. (1)	Type 'AR' (D/V) Type 'C3' (LO)	Type '1-S' (D/V) Type '11/4-S' (LO)
	Same device as required on legend, mounted +6" above backsplash (U.O.N.)	Same as required for device indicated on legend.	Same as required for device indicated on legend.	Same as required for device indicated on legend.
S	Same device as required on legend, except surface mounted box.	Same as required for device indicated on legend.	Same as required for device indicated on legend.	Same as required for device indicated on legend.
2P LCD	Dual port data outlet, mounted in ceiling at projector location.	Type 'B1' Provide Box with Ceiling Grid Hangar.	Type 'AR'	Type '1-S' Not required in accessible ceiling.
2P AV	Dual port data outlet for Audio-Visual equipment in accessible ceiling.	Type 'B1' Provide Box with Ceiling Grid Hangar.	Type 'C1'	Type '3/4-S'
2P AV	Dual port data outlet for Audio-Visual Equipment. Wall mounted. See AV Details for outlet location.	Type 'B1'	Type 'C1'	Type '1-S'
AP 2P	Dual port data outlet at wireless access point location mounted in accessible ceiling (U.O.N.)	Type 'C1' See Detail 1/E4.7	Type 'C1' See Detail 1/E4.7	Not required in accessible ceiling.
AP 2P	Dual port data outlet at wireless access point wall mounted @+8'-0" AFF (U.O.N.)	Type 'B1' See Detail 1/E4.7	Type 'C1'	Type '1-S'
2P WP AP (2)	Dual port data outlet for exterior WAP Location @ height per floor plans. See detail for additional requirements.	Type 'B1' See Detail 3/E4.7	Type 'C1' See Detail 3/E4.7	Type '1-S' Not required in accessible ceiling.
LC (2)	Audio-Visual Control Panel outlet with single port data outlet @+48" A.F.F. (U.O.N.) Refer to Drawing Details.	Type 'B1'	Type 'C3'	Type '1-S'
2P FP (2)	Wall mounted flat panel monitor location with dual port data outlet and AV wall plate @ height per detail drawings.	See Detail 2/E4.8	See Detail 2/E4.8	Type '1-S' (D) Type '1-1/4S' (A/V)
2P FP (2)	Ceiling mounted flat panel monitor location with dual port data outlet. See detail for additional requirements.	See Detail 4/E4.8	See Detail 4/E4.8	Type '1-S' (D) Type '1-1/4S' (A/V)
S AV	Audio-Visual system speaker ceiling mounted	Not Required	Type 'C3'	Type '3/4-S' Not required in accessible ceilings.
S AV	Audio-Visual system speakers wall mounted @+8'-0" AFF (U.O.N.)	Type 'B1'	Type 'C3'	Type '3/4-S'
LCD	Ceiling mounted projector per drawing details. See Details For accessible and non-accessible ceilings. 2/E4.9 1/E4.10	Type 'B2' Not required in accessible ceiling	Type 'C3'	Type '1-1/4-S' Not required in accessible ceiling

COMMUNICATION / SECURITY SYMBOL LEGEND

SYMBOL	DESCRIPTION	BACKBOX & RING	FACE PLATE	CONDUIT / RACEWAY
W (2)	Telephone outlet with staff type phone, +18" A.F.F. (U.O.N.) (W indicates wall mount at +48" A.F.F.) Height per detail 1/E1.0	Type 'B3'	Type 'C1'	Type '3/4-S'
W FM (2)	Direct Phone Trunk outlet, +18" A.F.F. (U.O.N.) (W indicates wall mount at +48" A.F.F.)	Type 'B3'	Type 'C1'	Type '3/4-S'
S A	IP-based Intercom Speaker recessed in ceiling. A=Page Zone	Type 'C1' (3)	Type 'C1' (3)	Type '3/4-S'
S A	IP-based Intercom Speaker recessed in wall, +8'-0" A.F.F (U.O.N.) A=Page Zone	Type 'C1', installed by electrical contractor. (4)	Type 'C1'	Type '3/4-S'
S A	IP-based Intercom Speaker, surface mount on interior wall, +8'-0" A.F.F (U.O.N.) A=Page Zone	Type 'B3' (3)	Type 'C1' (3)	Type '3/4-S'
B S	Analog Intercom Horn recessed in exterior wall @ +8'-0" AFF (U.O.N.) B=Page Zone	Type 'C1' (4)	Type 'C1' (4)	Type '3/4-S'
VC	Volume control for intercom system, mounted at +48" A.F.F. (U.O.N.) Minimum Height per detail 1/E1.0	Type 'B3'	Type 'C4'	Type '3/4-S'
WG	Clock wall mounted at, +8'-0" A.F.F (U.O.N.). (WG indicates wireguard)	Not required.	Not required.	Not required.
A S WG (2)	IP-based Clock/Speaker combination recessed in wall +8'-0" A.F.F (U.O.N.). (WG indicates wireguard) A=Page Zone	Type 'C1' installed by electrical contractor. See Detail 6/E4.7 (4)	Type 'C1' (4)	Type '3/4-S'
A	Sound system speaker surface mounted, height per plans (U.O.N.). ('A' equals speaker type, see specifications for complete description)	Type 'B1'	Type 'C3'	Type '1-S'
A	Sound system speaker ceiling mounted, ('A' equals speaker type, see specifications for complete description)	Type 'C3'	Type 'C3'	Type '1-S'
M WP 2	Microphone outlet wall mounted at +18" A.F.F.(U.O.N.). Number indicates quantity of outlets. 'WP' indicates weatherproof enclosure.	Type 'B1'	Type 'C3'	Type '1-S'
M F 2	Same device as required on legend, except in floor box. Number indicates quantity of outlets.	Floorbox per E3 series drawings.	Same as required for device indicated on legend.	Same as required for device indicated on legend.
M C 2	Same device as required on legend, except mounted in ceiling. Number indicates quantity of outlets.	Same as required for device indicated on legend.	Same as required for device indicated on legend.	Same as required for device indicated on legend.
K A	Security keypad wall mounted at +48" A.F.F (U.O.N.) Height per detail 1/E1.0 A=Letter Equals Zone	Type 'B2'	Type 'C5'	Type '3/4-S'
A	Security motion sensor ceiling mounted. A=Letter Equals Zone	Type 'B3'	Type 'C5'	Type '3/4-S'
A	Security motion sensor wall mounted at 6" below ceiling, or +10'-0" A.F.F. (U.O.N. whichever is lower. A=Letter Equals Zone	Type 'B3'	Type 'C5'	Type '3/4-S'
A	Security door contact. A=Letter Equals Zone	Type 'B3'	Type 'C5'	Type '3/4-S'
C (5)	Wall mounted exterior security camera with dual port data outlet. Height per floor plans.	Type 'B1'	Type 'BP/WP' by 282300 contractor	Type '1-S'
C (5)	Ceiling mounted interior security camera with dual port data outlet. Height per floor plans.	Type 'B1'	Type 'C1'	Type '1-S'
C (5)	Wall mounted security camera with dual port data outlet. Height as shown on floor plans.	Type 'B1'	Type 'C1'	Type '1-S'
J	J-Box for Future Low-Voltage Devices @+18" AFF (U.O.N.)	Type 'B1'	Blank Plate Color to Match	Type '1-S'
	Conduit sleeve through wall, above accessible ceiling. 7/E4.6 8/E4.6	Not required.	Not required.	(1) 3"C. for open low voltage wiring.
2"C.	Conduit sleeve through wall, above accessible ceiling. 7/E4.6 8/E4.6	Not required.	Not required.	(1) Conduit for open low voltage wiring, size as indicated.
(2) 2"C.	Conduit sleeve through wall, above accessible ceiling. 7/E4.6 8/E4.6	Not required.	Not required.	Multiple Conduits for open low voltage wiring, size and quantity as indicated.
	Conduit stubbed above accessible ceiling.	Not required.	Not required.	Conduit for open low voltage wiring. Refer to legend for size.
1 1/2"C.	Conduit stubbed above accessible ceiling.	Not required.	Not required.	(1) conduit for open low voltage wiring. size as indicated.
(2) 1"C.	Conduit stubbed above accessible ceiling.	Not required.	Not required.	Conduit for open low voltage wiring. size and quantity as indicated.

REGISTERED PROFESSIONAL ENGINEER
MONICA GOESE-HANSEN
NO.E 14781
Exp. 6-30-2023
ELECTRICAL
STATE OF CALIFORNIA

LICENSED ARCHITECT
ROGER CLARKE
No. C-21340
Exp. 10-31-23
STATE OF CALIFORNIA

#21087
STAMPS
6/21/2022 9:08:46 AM

IDENTIFICATION STAMP
DIV. OF THE STATE ARCHITECT
APP: 04-120895 INC:
REVIEWED FOR
SS ☑ FLS ☑ ACS ☑
DATE: 06/27/2022

JOHNSON CONSULTING ENGINEERS, INC.
Power | Lighting | Multimedia
Communications | Data Networking
12875 Brookprinter Place, Suite 300
Poway, CA 92064
P 858.679.4030 | F 858.513.0559
www.jce-inc.com
CONSULTANT BRANDING

RUHNAU CLARKE ARCHITECTS

GENERAL NOTES:

1. ALL CONDUITS WHICH ARE REQUIRED AS A PART OF SYSTEMS SPECIFIED FOR COMMUNICATIONS, TELEPHONE, INTERCOM, CLOCK FIRE ALARM, SECURITY, SOUND SYSTEMS, DATA NETWORKING, OR AUDIO-VISUAL SYSTEMS SHALL BE FURNISHED AND INSTALLED BY THE ELECTRICAL CONTRACTOR.
2. THE ELECTRICAL CONTRACTOR SHALL COORDINATE ALL CONDUIT REQUIREMENTS WITH EACH SYSTEM SUPPLIER PRIOR TO BID TO DETERMINE SPECIAL CONDUIT SYSTEM REQUIREMENTS.
3. THE ELECTRICAL CONTRACTOR SHALL PROVIDE CONDUIT SLEEVES FOR ALL OPEN CABLE INSTALLATIONS THROUGH RATED WALLS, BLOCK WALLS AND WHERE SHOWN ON THE DRAWINGS. PROVIDE CONDUIT FROM EACH BUILDING MAIN TERMINATION CABINET OR BACKBOARD TO THE NEAREST ACCESSIBLE CEILING FOR ACCESS INTO ALL ELECTRICAL OR COMMUNICATIONS ROOMS.
4. ALL CONDUIT, BOXES, AND RINGS SHALL BE FURNISHED AND INSTALLED BY ELECTRICAL CONTRACTOR.
5. ALL BLANK PLATES SHALL BE FURNISHED AND INSTALLED BY ELECTRICAL CONTRACTOR. (UNLESS OTHERWISE NOTED)
6. ALL CONDUITS SHALL BE FURNISHED WITH PULL STRINGS BY ELECTRICAL CONTRACTOR. COMMUNICATION CONTRACTOR TO PROVIDE POLYARIMID PULL TAPE WITH NEW CABLING INTO ALL CONDUITS BETWEEN BUILDINGS. SEE SPECIFICATIONS FOR REQUIREMENTS.
7. CONTRACTOR TO REVIEW ARCHITECTURAL CEILING PLANS TO DETERMINE LOCATIONS OF ACCESSIBLE CEILINGS PRIOR TO BID.
8. (271000) NUMBERS INDICATE MATCHING SPECIFICATION SECTION RESPONSIBLE FOR THIS WORK.
9. IN ADDITION TO THE ABOVE REQUIREMENTS, THE FOLLOWING REQUIREMENTS SHALL APPLY TO ALL DATA,VOICE, PAGING, AUDIO-VISUAL, SECURITY AND CLOCK CONDUITS:
10. FLEXIBLE METAL CONDUIT MAY BE USED ONLY WHERE REQUIRED AT BUILDING SEISMIC AND/OR EXPANSION JOINTS.
11. ALL UNDERGROUND CONDUITS SHALL BE PROVIDED WITH MINIMUM 24" RADIUS ELBOWS.
12. NO LENGTH OF CONDUIT SHALL BE INSTALLED TO EXCEED 150 FEET BETWEEN PULL BOXES, OR POINTS OF CONNECTION, UNLESS WHERE SPECIFICALLY DETAILED ON THE DRAWINGS.
13. NO LENGTH OF CONDUIT SHALL BE INSTALLED TO EXCEED TWO 90 DEGREE BENDS BETWEEN PULL BOXES, OR POINTS OF CONNECTION, UNLESS WHERE SPECIFICALLY DETAILED ON THE DRAWINGS.

KEY NOTES:

(1) JUNCTION BOXES FOR VOICE/DATA AND AUDIO-VISUAL CONNECTIONS MUST BE SEPARATE. AUDIO-VISUAL JUNCTION BOX OR BOXES SHALL BE FURNISHED AS SHOWN IN THE DRAWING DETAILS. PROVIDE (1) OR (2) TYPE 'B2' PER DETAILS.

(2) VOICE/DATA CABLING AND FACEPLATE FOR SYMBOL FURNISHED AND INSTALLED BY 271000 CONTRACTOR.

(3) SPEAKER BACKBOX AND DEVICE TO BE FURNISHED AND INSTALLED BY 271000 CONTRACTOR.

(4) SPEAKER, SPEAKER/CLOCK OR HORN BACKBOX AND DEVICE TO BE FURNISHED BY 271000 CONTRACTOR. BACKBOX TO BE INSTALLED BY THE DIVISION 26 CONTRACTOR.

(5) CAMERA LOCATIONS SHALL BE FURNISHED WITH (2) DATA CABLES TERMINATED ON SURFACE MOUNT JACK INSTALLED IN JUNCTION BOX. DATA CONNECTIONS FURNISHED AND INSTALLED BY 271000 CONTRACTOR. SEE SPECIFICATIONS FOR ADDITIONAL REQUIREMENTS.

GHS KITCHEN & WEIGHTROOM MOD:

#21087
STAMPS

6/21/2022 9:08:50 AM

IDENTIFICATION STAMP
DIV. OF THE STATE ARCHITECT
APP: 04-120895 INC:
REVIEWED FOR
SS ☑ FLS ☑ ACS ☑
DATE: 06/27/2022
ADDENDUM
FOR INFORMATION ONLY

JOHNSON
CONSULTING ENGINEERS, INC.
Power | Lighting | Multimedia
Communications | Data Networking
12875 Brookprinter Place, Suite 300
Poway, CA 92064
P 858.679.4030 | F 858.513.0559
www.jce-inc.com
CONSULTANT BRANDING

RUHNAU
CLARKE
ARCHITECTS

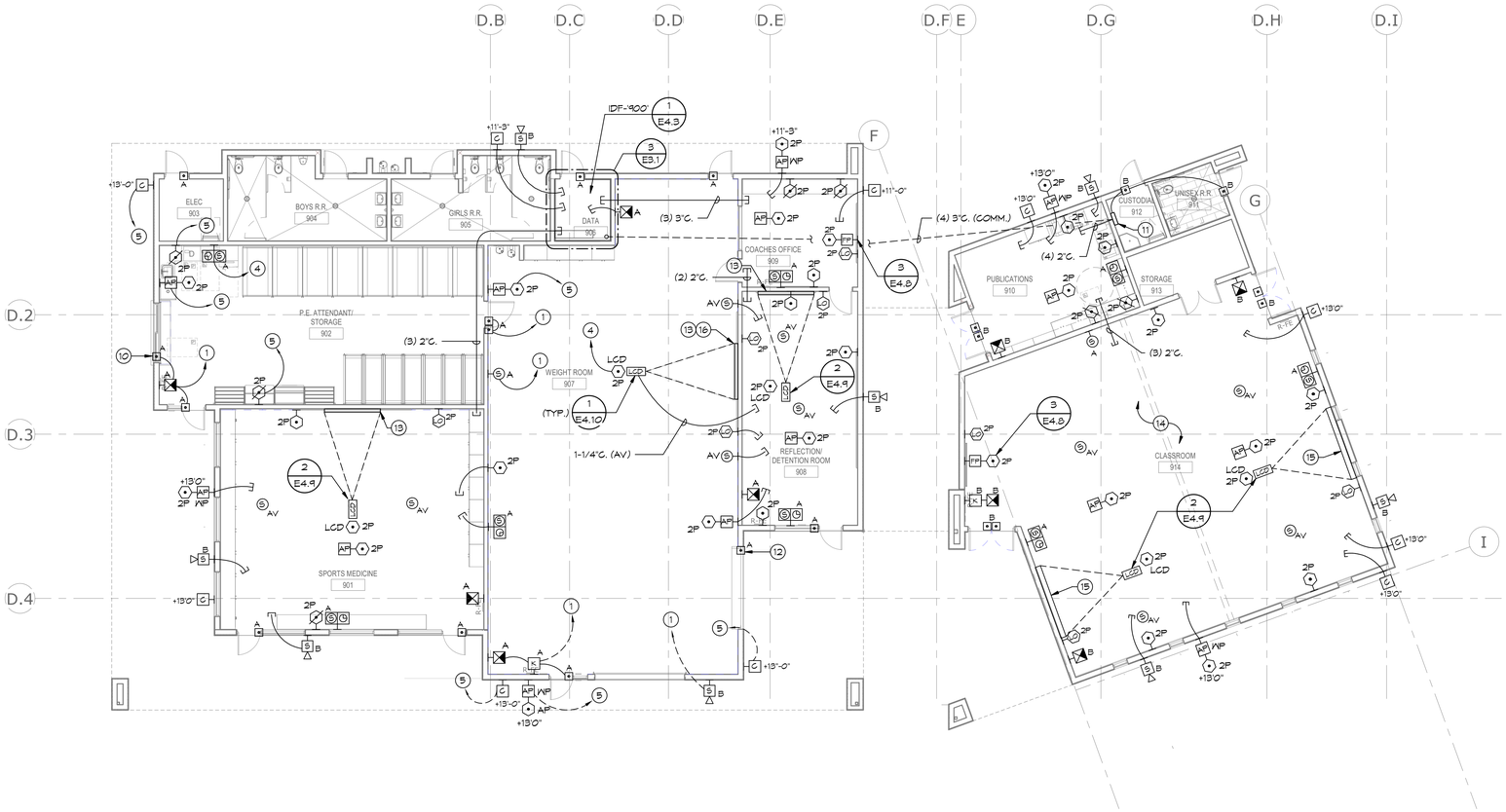

GENERAL NOTES:

1. REFERENCE ARCHITECTURAL INTERIOR ELEVATIONS FOR EXACT LOCATION OF ALL WALL MOUNTED DEVICES.
2. REFERENCE E4 AND E8 SERIES SHEETS FOR TYPICAL CONDUIT AND BACKBOX INSTALLATION DETAILS.
3. REFERENCE E4 SERIES SHEETS FOR TYPICAL COMMUNICATION SYSTEMS RISER DIAGRAM.
4. REFERENCE RISER DIAGRAMS FOR TYPICAL CONDUIT SIZES AND ROUTINGS.
5. LOCATION OF PROJECTOR AND OTHER AUDIO-VISUAL EQUIPMENT IS DIAGRAMMATICAL. EXACT LOCATION OF EQUIPMENT TO BE FIELD VERIFIED PRIOR TO INSTALLATION. LOCATION OF PROJECTOR AND PROJECTOR MOUNT TO BE COORDINATED WITH LOCATION OF SCREEN.
6. REFER TO AUDIO-VISUAL SYSTEM DIAGRAMS FOR ADDITIONAL REQUIREMENTS, FOR JUNCTION BOX LOCATIONS, TYPES AND SIZES.

KEY NOTES:

1. 3/4"C. TO BUILDING COMMUNICATIONS BACKBOARD.
2. 1"C. TO BUILDING COMMUNICATIONS BACKBOARD.
3. 1-1/4"C. TO BUILDING COMMUNICATIONS BACKBOARD.
4. 3/4"C. TO BUILDING 'IDF' LOCATION.
5. 1"C. TO BUILDING 'IDF' LOCATION.
6. 1-1/4"C. TO BUILDING 'IDF' LOCATION.
7. 3/4"C. TO AV SYSTEM EQUIPMENT RACK OR ENCLOSURE.
8. 1"C. TO AV SYSTEM EQUIPMENT RACK OR ENCLOSURE.
9. 1-1/4"C. TO AV SYSTEM EQUIPMENT RACK OR ENCLOSURE.
10. DOOR CONTACT AT ROLL-UP WINDOW.
11. PROVIDE TELEPHONE TERMINAL CABINET FOR VOICE/DATA/IP-PAGE AND SECTION 28 SECURITY AND VIDEO SURVEILLANCE CABLES. PROVIDE SURFACE MOUNT 36"H X 30"W X 6" DEEP CABINET WITH DOUBLE DOORS BY EATON-B-LINE MODEL # 36306TCSNK IN CLOSET.
12. DOOR CONTACT AT ROLL-UP DOOR
13. MANUAL PROJECTION SCREEN @ +8'-10" A.F.F. (U.O.N.) TO TOP OF CASE. SEE DETAIL 4/E4.9 FOR INSTALLATION REQUIREMENTS.
14. ROUTE ALL CONDUIT STUB-UPS TO ACCESSIBLE CEILING AREA BEYOND SOFFITS.
15. RECESSED MANUAL PROJECTION SCREEN MOUNTED IN HARD LID SOFFIT. SEE DETAIL 2/E4.10 FOR INSTALLATION REQUIREMENTS.
16. MOUNT PROJECTION SCREEN @9'-10" AFF TO TOP OF SCREEN CASE.

BLDG 900 FLOOR PLAN - COMMUNICATIONS

SCALE: 1/8" = 1'-0"
REF: /
1

PROJECT No. :1-30-55
6/21/2022 9:08:50 AM

DRAWN BY: CHECKED BY:

ISSUE No.____ DATE____ DESCRIPTION____
ISSUE No.____ DATE____ DESCRIPTION____
ISSUE No.____ DATE____ DESCRIPTION____
ISSUE No.____ DATE____ DESCRIPTION____

REVISION No.____ DATE____ DESCRIPTION____
REVISION No.____ DATE____ DESCRIPTION____
REVISION No.____ DATE____ DESCRIPTION____
REVISION No.____ DATE____ DESCRIPTION____

RUHNAUCLARKE.COM
3775 TENTH STREET, RIVERSIDE CALIFORNIA 92501 (951) 684 4664 / 5751 PALMER WAY, SUITE C, CARLSBAD CALIFORNIA 92010 (760) 438 5899

GHS KITCHEN & WEIGHTROOM MOD
GROSSMONT HIGH SCHOOL
1100 MURRAY DR, EL CAJON, CA 92020
GROSSMONT UNION HIGH SCHOOL

BLDG 900 FLOOR PLAN - COMMUNICATIONS

E4.1

1-30-55

GHS KITCHEN & WEIGHTROOM MOD:

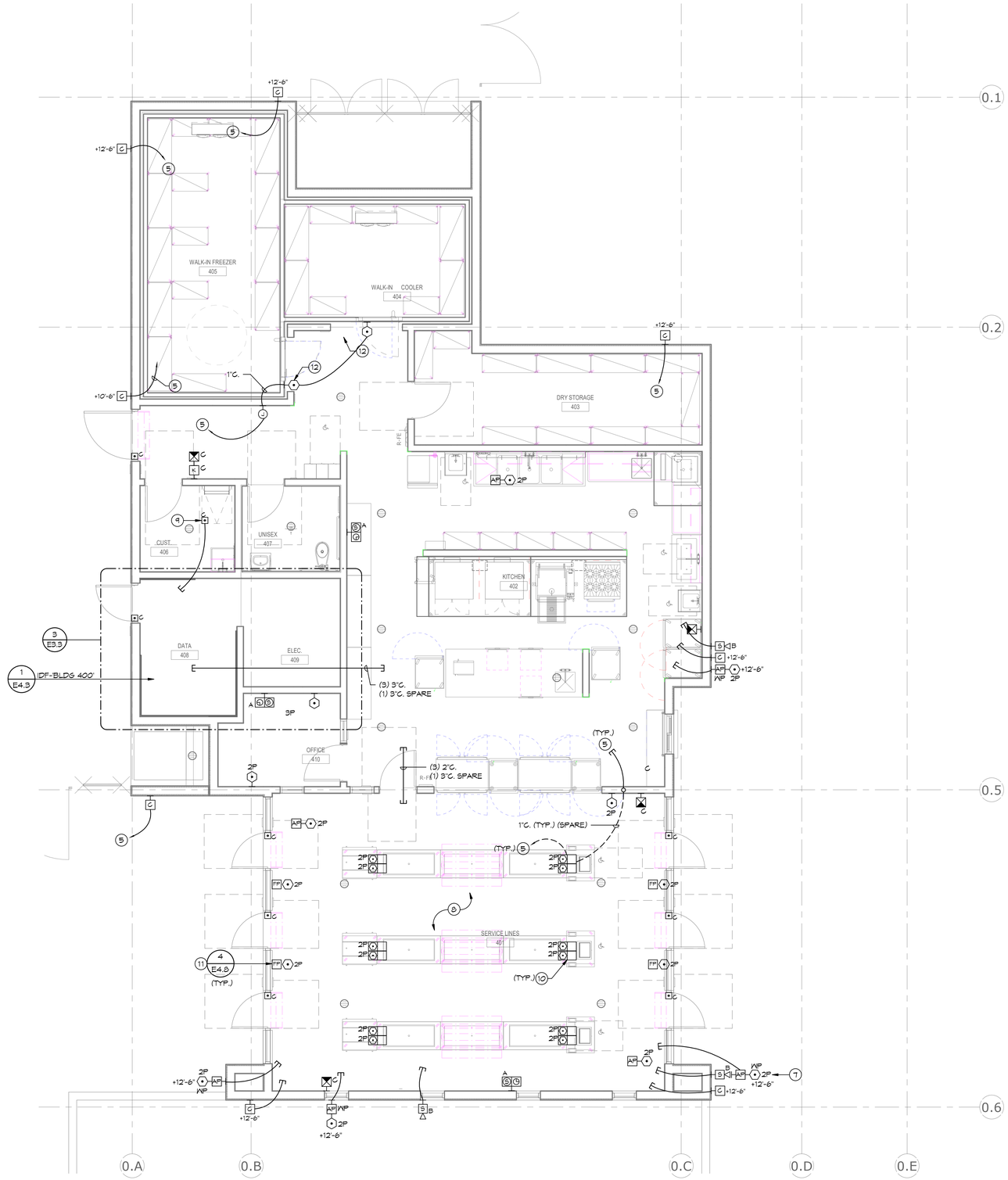

KITCHEN FLOOR PLAN - COMMUNICATIONS

SCALE: 1/4" = 1'-0"
REF: /
1

#21087
STAMPS
6/21/2022 9:08:53 AM

IDENTIFICATION STAMP
DIV. OF THE STATE ARCHITECT
APP: 04-120895 INC:
REVIEWED FOR
SS ☑ FLS ☑ ACS ☑
DATE: 06/27/2022
AGENCY
FILE NUMBER

JOHNSON
CONSULTING ENGINEERS, INC.
Power | Lighting | Multimedia
Communications | Data Networking
12875 Brookprinter Place, Suite 300
Poway, CA 92064
P 858.679.4030 | F 858.513.0559
www.jce-inc.com
CONSULTANT BRANDING

RUHNAU
CLARKE
ARCHITECTS

GENERAL NOTES:

1. REFERENCE ARCHITECTURAL INTERIOR ELEVATIONS FOR EXACT LOCATION OF ALL WALL MOUNTED DEVICES.
2. REFERENCE E4 AND E8 SERIES SHEETS FOR TYPICAL CONDUIT AND BACKBOX INSTALLATION DETAILS.
3. REFERENCE E4 SERIES SHEETS FOR TYPICAL COMMUNICATION SYSTEMS RISER DIAGRAM.
4. REFERENCE RISER DIAGRAMS FOR TYPICAL CONDUIT SIZES AND ROUTINGS.
5. LOCATION OF PROJECTOR AND OTHER AUDIO-VISUAL EQUIPMENT IS DIAGRAMMATICAL. EXACT LOCATION OF EQUIPMENT TO BE FIELD VERIFIED PRIOR TO INSTALLATION. LOCATION OF PROJECTOR AND PROJECTOR MOUNT TO BE COORDINATED WITH LOCATION OF SCREEN.
6. REFER TO AUDIO-VISUAL SYSTEM DIAGRAMS FOR ADDITIONAL REQUIREMENTS, FOR JUNCTION BOX LOCATIONS, TYPES AND SIZES.

KEY NOTES:

1. 3/4"C. TO BUILDING COMMUNICATIONS BACKBOARD.
2. 1"C. TO BUILDING COMMUNICATIONS BACKBOARD.
3. 1 1/4"C. TO BUILDING COMMUNICATIONS BACKBOARD.
4. 3/4"C. TO BUILDING 'IDF' LOCATION.
5. 1"C. TO BUILDING 'IDF' LOCATION.
6. 1 1/4"C. TO BUILDING 'IDF' LOCATION.
7. MOUNT EXTERIOR WAP ABOVE EXTERIOR SPEAKER AT HEIGHT NOTED.
8. DRESS CABLES UP TIGHT TO BOTTOM OF ROOF JOIST DECK IN OPEN GRID CEILING AREA - SERVICE LINES ROOM #401.
9. DOOR CONTACT AT ROOF HATCH.
10. FLOOR BOX FOR POS CONNECTION ON SERVING LINES. REFER TO FOOD SERVICE FLOOR PLANS FOR SERVICE LINE EQUIPMENT. ROUTE DATA CONDUIT TO IDF CLOSET AND SPARE CONDUIT TO NEAREST ACCESSIBLE CEILING. REFER TO FLOOR BOX DETAIL FOR ADDITIONAL REQUIREMENTS.
11. CEILING MOUNTED MENU BOARD. PROVIDE FLAT PANEL MOUNT AND SUPPORT POST TO DECK ABOVE. REFER TO DRAWING DETAILS AND SPECIFICATIONS FOR REQUIREMENTS.
12. DATA OUTLET FOR TEMP/ENVIRONMENTAL SENSOR FOR FREEZER/COOLER MONITORING SYSTEM. CONFIRM EXACT LOCATION PRIOR TO INSTALLATION WITH CONSTRUCTION MANAGER. DATA MAY BE EITHER INSIDE OR OUTSIDE FREEZER/COOLER.

GHS KITCHEN & WEIGHTROOM MOD:

PROJECT No. :1-30-55
6/21/2022 9:08:53 AM

DRAWN BY: CHECKED BY:

ISSUE No.____ DATE____ DESCRIPTION____
ISSUE No.____ DATE____ DESCRIPTION____
ISSUE No.____ DATE____ DESCRIPTION____
ISSUE No.____ DATE____ DESCRIPTION____

REVISION No.____ DATE____ DESCRIPTION____
REVISION No.____ DATE____ DESCRIPTION____
REVISION No.____ DATE____ DESCRIPTION____
REVISION No.____ DATE____ DESCRIPTION____

RUHNAUCLARKE.COM
3775 TENTH STREET, RIVERSIDE CALIFORNIA 92501(951) 684 4664 / 5751 PALMER WAY, SUITE C, CARLSBAD CALIFORNIA 92010(760) 438 5899

GHS KITCHEN & WEIGHTROOM MOD
GROSSMONT HIGH SCHOOL
1100 MURRAY DR, EL CAJON, CA 92020
GROSSMONT UNION HIGH SCHOOL

KITCHEN FLOOR PLAN - COMMUNICATIONS

E4.2

1-30-55

#21087
STAMPS
6/21/2022 9:08:56 AM

IDENTIFICATION STAMP
DIV. OF THE STATE ARCHITECT
APP: 04-120895 INC:
REVIEWED FOR
SS ☑ FLS ☑ ACS ☑
DATE: 06/27/2022
ADD'L
FOR TRACKING PURPOSES ONLY

JOHNSON CONSULTING ENGINEERS, INC.
Power | Lighting | Multimedia
Communications | Data Networking
12875 Brookprinter Place, Suite 300
Poway, CA 92064
P 858.679.4030 | F 858.513.0559
www.jce-inc.com
CONSULTANT BRANDING

RUHNAU CLARKE ARCHITECTS

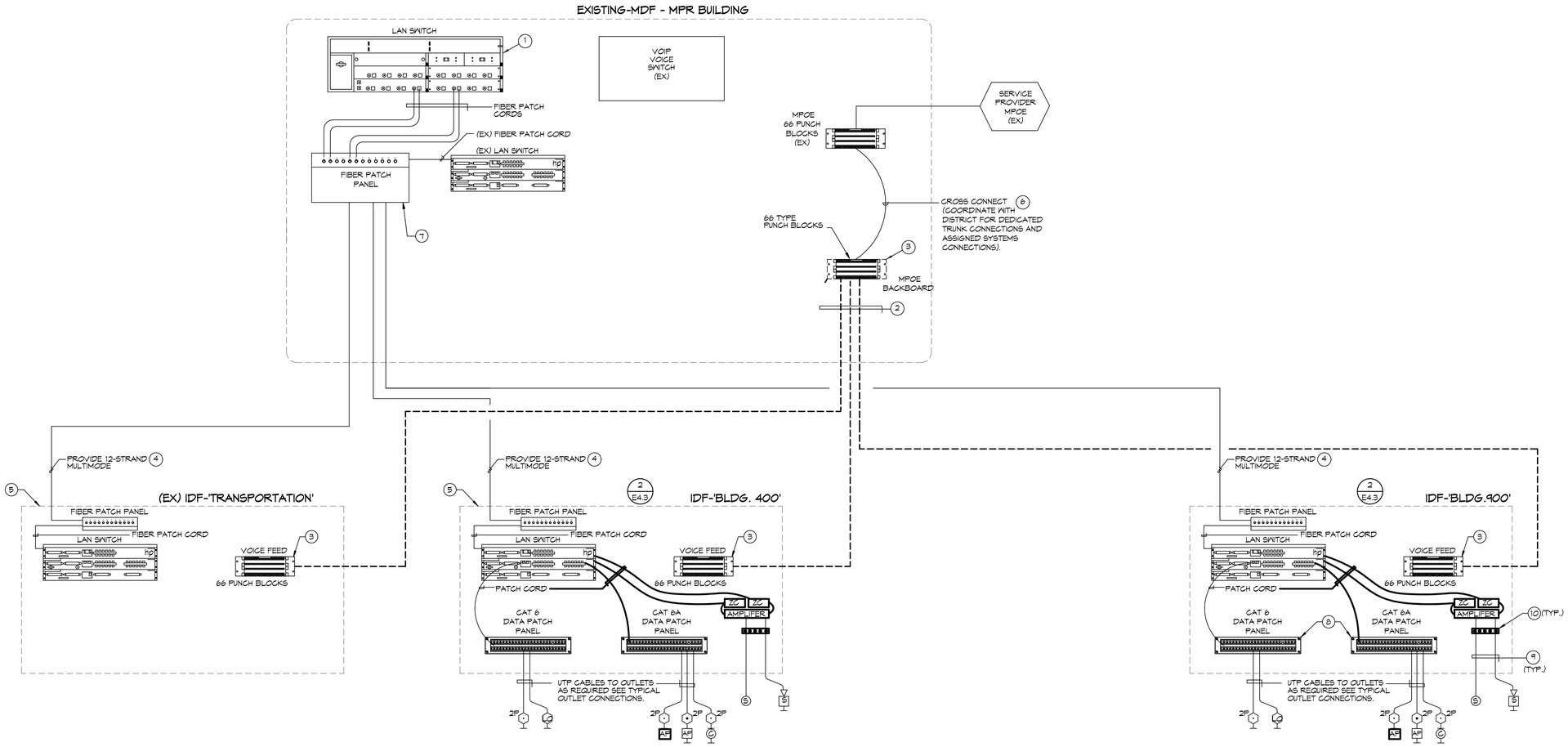

VOICE/DATA INFRASTRUCTURE RISER DIAGRAM

NO SCALE

1 / E4.3

GENERAL NOTES:

1. UNLESS OTHERWISE NOTED ALL ITEMS ARE TO BE FURNISHED AND INSTALLED BY 271500 CONTRACTOR.
2. ALL CONDUITS, POWER OUTLETS AND GROUNDING CONNECTIONS, BACKBOARDS TO BE PROVIDED BY ELECTRICAL CONTRACTOR.
3. REFERENCE SPECIFICATIONS FOR ADDITIONAL REQUIREMENTS, AND FLOOR PLANS FOR ADDITIONAL EQUIPMENT ITEMS REQUIRED, AND THEIR LOCATIONS.
4. WHERE OPEN CONDUCTORS ARE INSTALLED ABOVE ACCESSIBLE CEILINGS, ALL CONDUCTORS SHALL BE NEATLY BUNDLED TOGETHER AND SUPPORTED FROM ROOF STRUCTURE. WHERE BUNDLED WITH OTHER COMMUNICATION SYSTEMS, IDENTIFYING TAGS SHALL BE PROVIDED TO IDENTIFY THESE CONDUCTORS FROM OTHER SYSTEMS.
5. CONTRACTOR TO COORDINATE QUANTITY, SIZE AND LOCATION OF CONDUIT SLEEVES THRU RATED WALLS WITH ELECTRICAL CONTRACTOR PRIOR TO BID. ELECTRICAL CONTRACTOR SHALL PROVIDE CONDUIT SLEEVES AND FIRE PENETRATION SEAL AFTER CABLES ARE INSTALLED.

KEY NOTES:

1. DISTRICT FURNISHED AND INSTALLED.
2. PROVIDE 25-PAIR OSP-RATED VOICE FEED CABLE.
3. TERMINATE VOICE FEED CABLE AT COMMUNICATIONS BACKBOARD OR COMMUNICATIONS CABINET. REFER TO FLOOR PLANS FOR ADDITIONAL INFORMATION.
4. PROVIDE MULTIMODE 50/125UM, LASER OPTIMIZED, OM4 FIBER OPTIC FEED CABLE. TERMINATE ALL FIBERS IN PATCH PANEL. PROVIDE QUANTITY AS NOTED. SEE SPECIFICATIONS FOR ADDITIONAL REQUIREMENTS.
5. SEE BLDG. 900 FOR TYPICAL NOTES.
6. CONTRACTOR SHALL FURNISH ALL TRUNK CROSS CONNECTIONS AND CABLING TO SYSTEMS AND LOCATIONS REQUIRING DIRECT TRUNK LINES. CONNECTIONS SHALL BE PROVIDED TO FIRE ALARM, SECURITY, ELEVATORS, ETC.
7. PROVIDE NEW FIBER OPTIC PATCH PANELS IN MDF TO ACCOMODATE NEW FIBER OPTIC FEED CABLING.
8. PROVIDE RACK MOUNTED 48-PORT CATEGORY-6 AND 6A PATCH PANEL INSIDE IDF/MDF COMMUNICATIONS RACK AS NEEDED. SEE RACK DETAIL DRAWING FOR ADDITIONAL REQUIREMENTS. PROVIDE 20% SPARE PORT.
9. PROVIDE CABLING FROM AUDIO AMPLIFIERS TO PAGING SYSTEM SPEAKER.
10. PROVIDE SPEAKER TERMINAL STRIP FOR ANALOG SPEAKER.

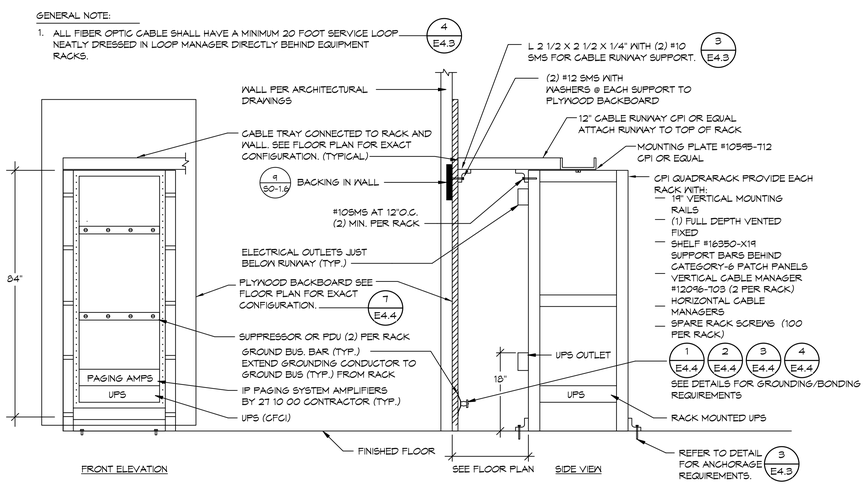

DATA DISTRIBUTION FRAME DETAIL - IDF ROOM SINGLE RACK DETAIL

NO SCALE

2 / E4.3

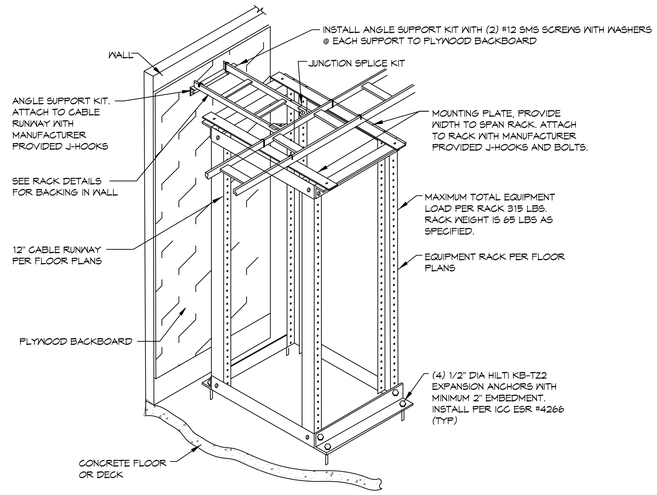

4-POST EQUIPMENT RACK ANCHORAGE DETAIL

NO SCALE

3 / E4.3

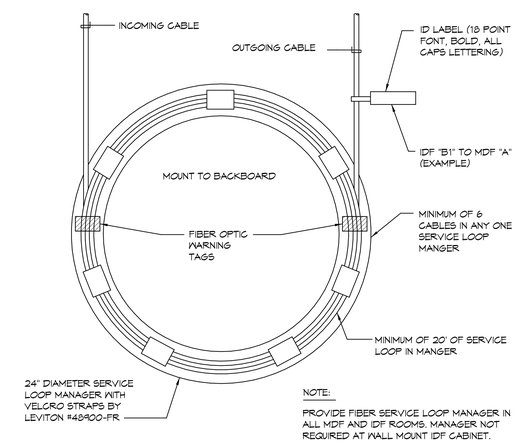

TYPICAL FIBER OPTIC FEED SERVICE LOOP DETAIL

NO SCALE

4 / E4.3

GHS KITCHEN & WEIGHTROOM MOD:

PROJECT No. :1-30-55
6/21/2022 9:08:56 AM

DRAWN BY: CHECKED BY:

ISSUE No.____ DATE____ DESCRIPTION____
ISSUE No.____ DATE____ DESCRIPTION____
ISSUE No.____ DATE____ DESCRIPTION____
ISSUE No.____ DATE____ DESCRIPTION____
REVISION No.____ DATE____ DESCRIPTION____
REVISION No.____ DATE____ DESCRIPTION____
REVISION No.____ DATE____ DESCRIPTION____
REVISION No.____ DATE____ DESCRIPTION____

GHS KITCHEN & WEIGHTROOM MOD
GROSSMONT HIGH SCHOOL
1100 MURRAY DR, EL CAJON, CA 92020
GROSSMONT UNION HIGH SCHOOL

VOICE/DATA RISER DIAGRAM AND DETAILS

E4.3

1-30-55

#21087
STAMPS
6/21/2022 9:08:58 AM

IDENTIFICATION STAMP
DIV. OF THE STATE ARCHITECT
APP: 04-120895 INC:
REVIEWED FOR
SS ☑ FLS ☑ ACS ☑
DATE: 06/27/2022
ADD'L REVIEW REQUIRED

JOHNSON
CONSULTING ENGINEERS, INC.
Power | Lighting | Multimedia
Communications | Data Networking
12875 Brookprinter Place, Suite 300
Poway, CA 92064
P 858.679.4030 | F 858.513.0559
www.jce-inc.com
CONSULTANT BRANDING

RUHNAU
CLARKE
ARCHITECTS

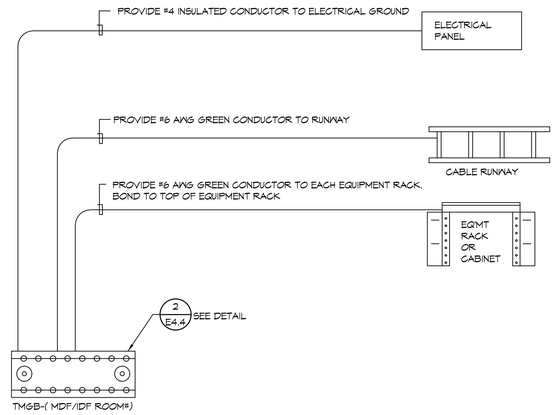

TYPICAL MDF / IDF ROOM GROUNDING DETAIL (1 / E4.4)
NO SCALE

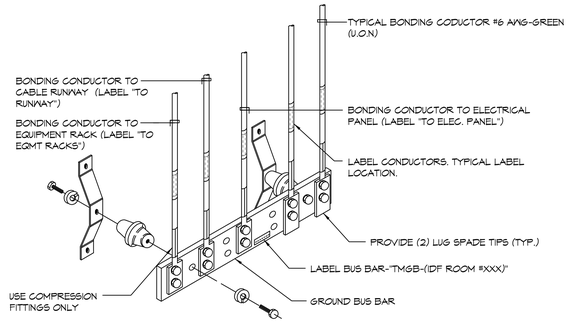

PROVIDE "CPI # 40158-012" GROUND BAR ASSEMBLY OR EQUAL. (PROVIDE INSULATOR ASSEMBLIES)

DATA / COMMUNICATIONS GROUNDING DETAIL (2 / E4.4)
NO SCALE

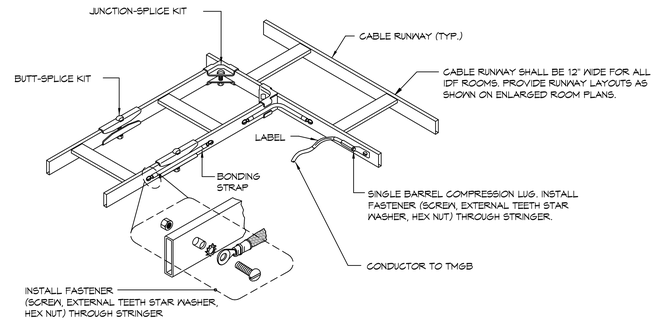

TYPICAL CABLE RUNWAY BONDING IN MDF / IDF ROOM (3 / E4.4)
NO SCALE

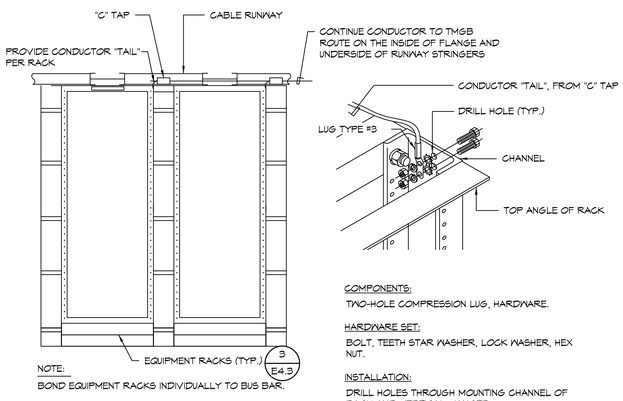

NOTE:
BOND EQUIPMENT RACKS INDIVIDUALLY TO BUS BAR.

COMPONENTS:
TWO-HOLE COMPRESSION LUG, HARDWARE.

HARDWARE SET:
BOLT, TEETH STAR WASHER, LOCK WASHER, HEX NUT.

INSTALLATION:
DRILL HOLES THROUGH MOUNTING CHANNEL OF RACK AND VERTICAL MANGER.
INSTALL FASTENERS THROUGH CHANNEL AND VERTICAL MANAGER.

TYPICAL EQUIPMENT RACK BONDING IN MDF / IDF ROOM (4 / E4.4)
NO SCALE

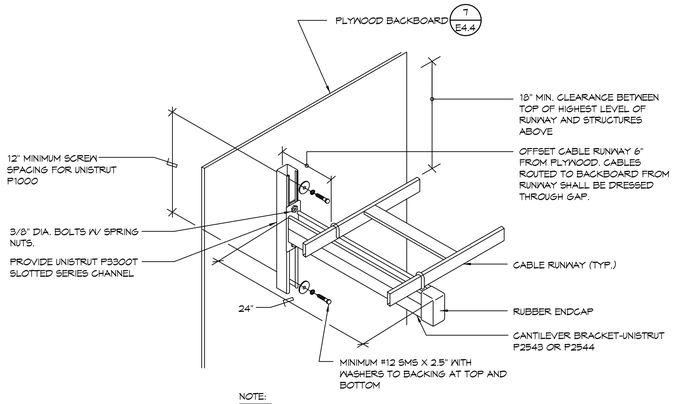

NOTE:
1. REFER TO ROOM PLANS FOR CABLE RUNWAY SIZE AND REQUIREMENTS.

MAX. ALLOWABLE LOAD OF BRACKET = 75LBS.

TYPICAL CABLE RUNWAY INSTALLATION ALONG WALL DETAIL (5 / E4.4)
NO SCALE

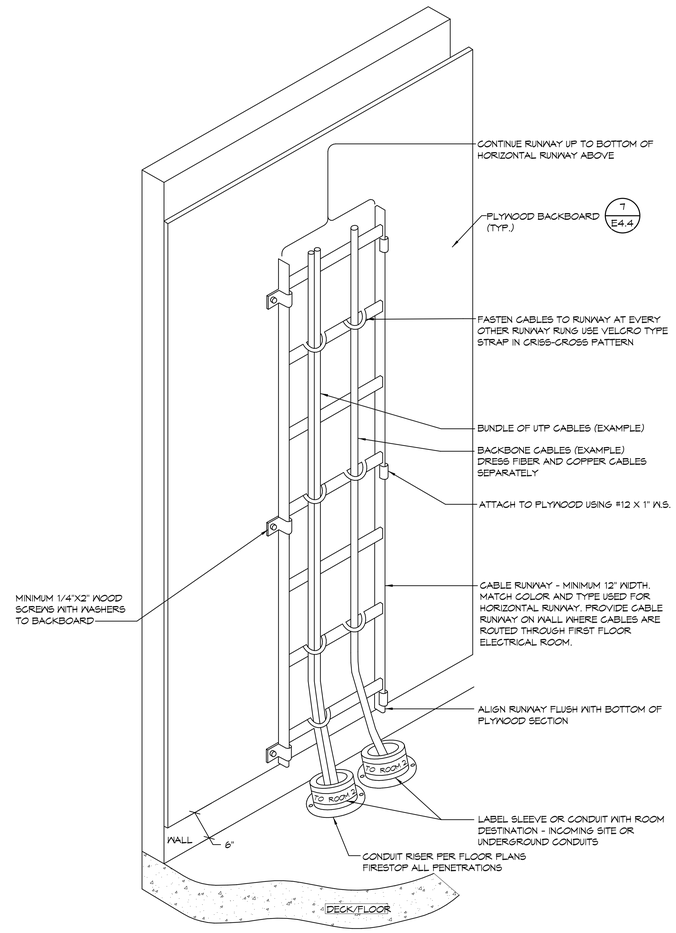

NOTE:
1. REFER TO FLOOR PLANS AND DETAILS FOR CONDUIT SIZES AND LOCATIONS.
2. PROVIDE A VERTICAL CABLE RUNWAY AT ALL CONDUIT PENETRATIONS FROM FIRST FLOOR INSIDE ROOMS.

TYPICAL CABLE ROUTING AT INCOMING UNDERGROUND CONDUITS IN IDF CLOSET (8 / E4.4)
NO SCALE

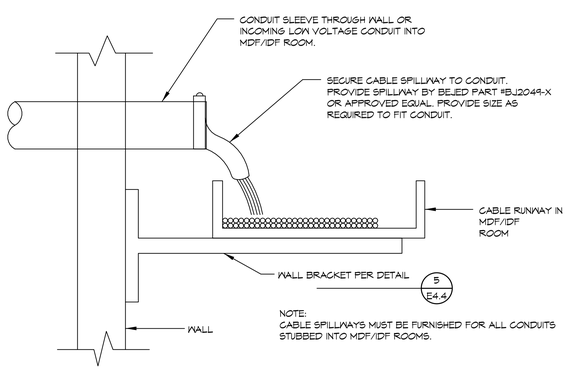

NOTE:
CABLE SPILLWAYS MUST BE FURNISHED FOR ALL CONDUITS STUBBED INTO MDF/IDF ROOMS.

TYPICAL CONDUIT/CABLE SPILLWAY DETAIL - IDF ROOM (6 / E4.4)
NO SCALE

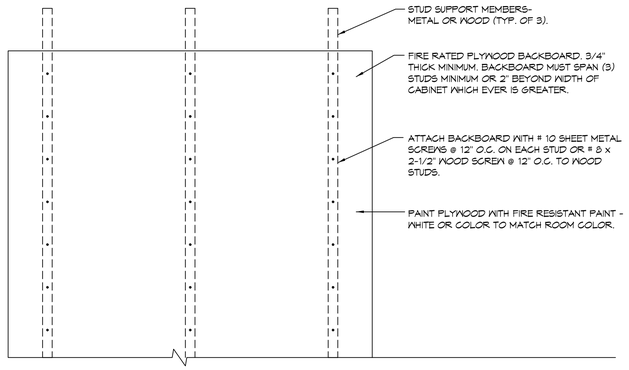

TYPICAL BACKBOARD DETAIL (7 / E4.4)
NO SCALE

GHS KITCHEN & WEIGHTROOM MOD:

PROJECT No. :1-30-55
6/21/2022 9:08:58 AM

DRAWN BY: _____ CHECKED BY: _____
ISSUE No.____ DATE_____ DESCRIPTION_____
ISSUE No.____ DATE_____ DESCRIPTION_____
ISSUE No.____ DATE_____ DESCRIPTION_____
ISSUE No.____ DATE_____ DESCRIPTION_____
REVISION No.____ DATE_____ DESCRIPTION_____
REVISION No.____ DATE_____ DESCRIPTION_____
REVISION No.____ DATE_____ DESCRIPTION_____
REVISION No.____ DATE_____ DESCRIPTION_____

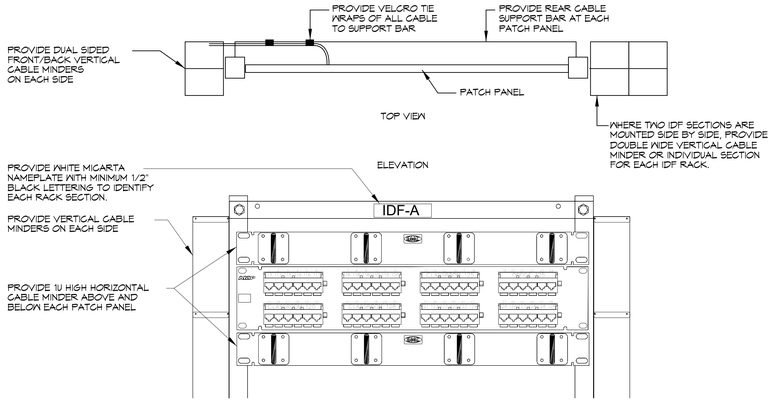

TYPICAL IDF / MDF LABELING AND CABLE MANAGEMENT DETAIL

NO SCALE

1 / E4.5

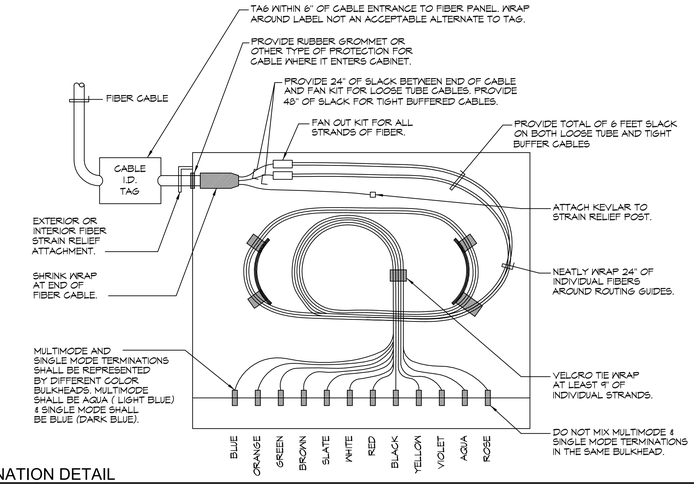

FIBER TERMINATION DETAIL

NO SCALE

2 / E4.5

GENERAL NOTES:

1. ALL IDENTIFICATIONS SHALL BE MACHINE MADE, NO HAND WRITTEN LABELS. SEE SPECIFICATIONS. VERIFY IN WRITING ALL ROOM IDENTIFICATIONS WITH ARCHITECT PRIOR TO MAKING ANY LABELS.
2. ALL LABELING FORMATS ARE SUBJECT TO APPROVAL BY THE DISTRICT IT DEPARTMENT. CONTRACTOR MUST CONFIRM ALL LABELING FORMATS PRIOR TO INSTALLATION OF ANY LABELS AND MUST HAVE WRITTEN APPROVAL. CONTRACT MUST FOLLOW DOCUMENTED DISTRICT STANDARDS AND HAVE LABELING FORMAT APPROVED IN WRITING PRIOR TO INSTALLATION.

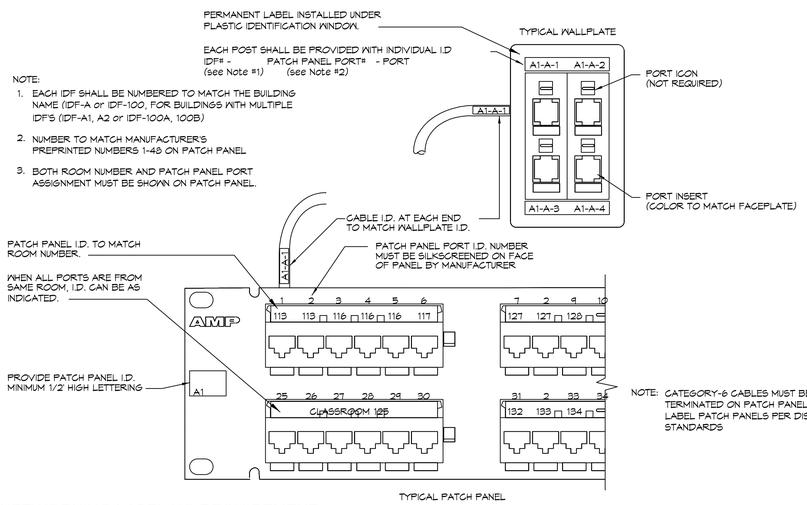

TYPICAL DATA NETWORKING LABELING REQUIREMENT

NO SCALE

3 / E4.5

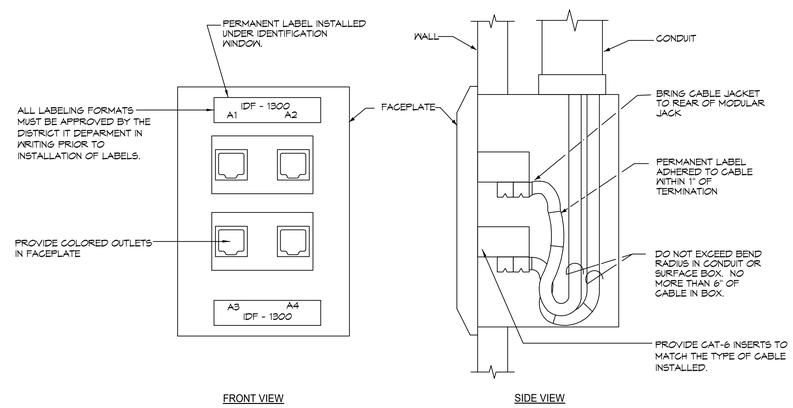

TYPICAL FACEPLATE LABELING DETAIL

NO SCALE

4 / E4.5

PAGE ZONE SCHEDULE		
BUILDING / AREA	ZONE A	ZONE B
NEW CLASSROOM BUILDINGS - EXTERIOR		X
NEW CLASSROOM BUILDINGS - INTERIOR	X	
KITCHEN BUILDING - EXTERIOR		X
KITCHEN BUILDING - INTERIOR	X	

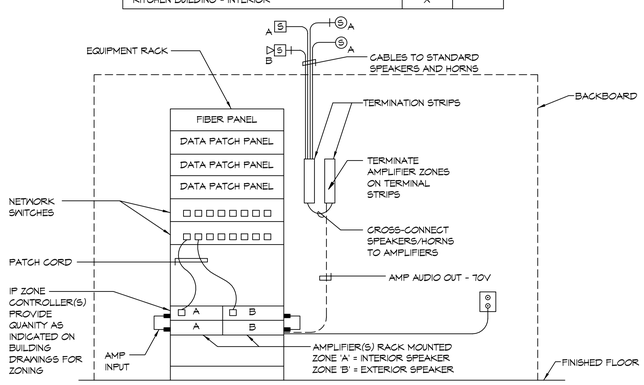

STANDARD SPEAKER CONNECTION TO IP ZONE CONTROLLER FOR EXTERIOR SPEAKERS

NO SCALE

5 / E4.5

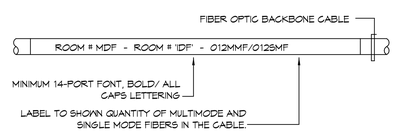

NOTES:

1. LABEL BOTH ENDS OF BACKBONE CABLES AND IN EACH ROOM IN WHICH THE CABLE ROUTES THROUGH.
2. ROOM DESIGNATIONS SHOWN IN DETAIL ARE AN EXAMPLE AND MAY NOT REFLECT ACTUAL ROOM INFORMATION.

TYPICAL BACKBONE LABELING DETAIL

NO SCALE

6 / E4.5

#21087 STAMPS 6/21/2022 9:09:00 AM

IDENTIFICATION STAMP
DIV. OF THE STATE ARCHITECT
APP: 04-120895 INC:
REVIEWED FOR
SS ☑ FLS ☑ ACS ☑
DATE: 06/27/2022

JOHNSON CONSULTING ENGINEERS, INC.
Power | Lighting | Multimedia
Communications | Data Networking
12875 Brookprinter Place, Suite 300
Poway, CA 92064
P 858.679.4030 | F 858.513.0559
www.jce-inc.com
CONSULTANT BRANDING

RUHNAU CLARKE ARCHITECTS

GHS KITCHEN & WEIGHTROOM MOD:

PROJECT No. :1-30-55
6/21/2022 9:09:00 AM

DRAWN BY: CHECKED BY:

ISSUE No.____ DATE____ DESCRIPTION____
REVISION No.____ DATE____ DESCRIPTION____

RUHNAUCLARKE.COM
3775 TENTH STREET, RIVERSIDE CALIFORNIA 92501(951) 684 4664 / 5751 PALMER WAY, SUITE C, CARLSBAD CALIFORNIA 92010(760) 438 5899

GHS KITCHEN & WEIGHTROOM MOD
GROSSMONT HIGH SCHOOL
1100 MURRAY DR, EL CAJON, CA 92020
GROSSMONT UNION HIGH SCHOOL

COMMUNICATION DETAILS

E4.5

1-30-55

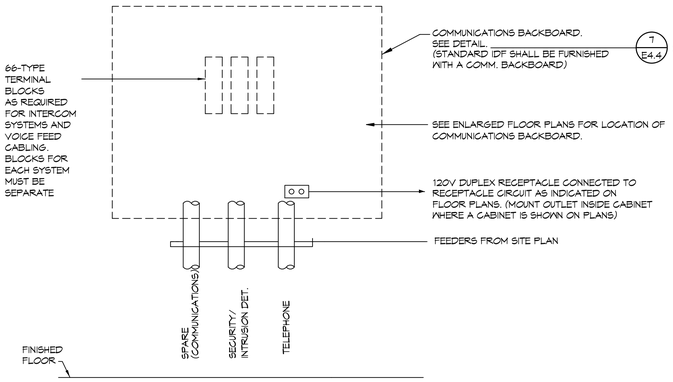

COMMUNICATIONS BACKBOARD DETAIL
NO SCALE
1 / E4.6

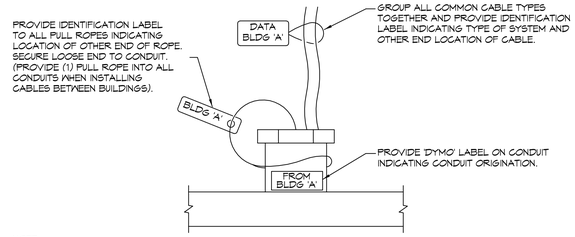

NOTE:
1. THIS DETAIL APPLIES TO ALL CONDUITS ENTERING BUILDINGS FROM UNDERGROUND OR OVERHEAD WHERE CONDUITS ENTER UNDERGROUND HANDHOLES, PROVIDE SIMILAR LABELING EXCEPT USE WATERPROOF LABELS.
2. HAND WRITTEN LABELS ARE NOT PERMITTED.

COMMUNICATION CABLE TYPICAL LABELING DETAIL
NO SCALE
2 / E4.6

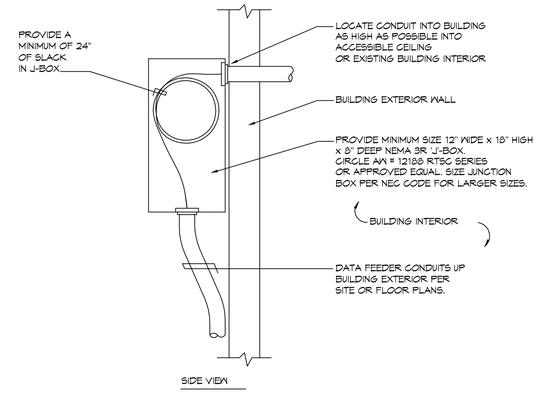

DATA SYSTEM INSTALLATION
NO SCALE
3 / E4.6

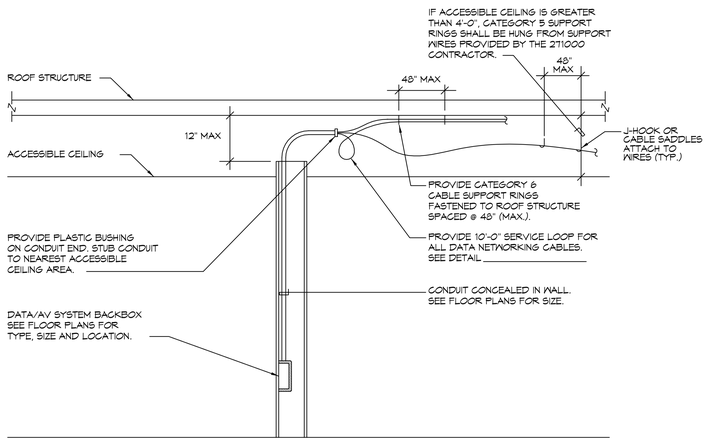

NOTES:
#1 REFERENCE CONTRACT DOCUMENTS FOR WHICH SYSTEMS, AND IN WHAT AREAS OPEN WIRE INSTALLATIONS ARE PERMITTED.
#2 SECURITY SYSTEMS CONTRACTOR MUST INSTALL THEIR OWN SUPPORT SYSTEM, SEPARATE FROM THE VOICE/DATA CABLING SUPPORT SYSTEM.

COMMUNICATIONS SYSTEM OPEN WIRE/CONDUIT STUB DETAIL
NO SCALE
4 / E4.6

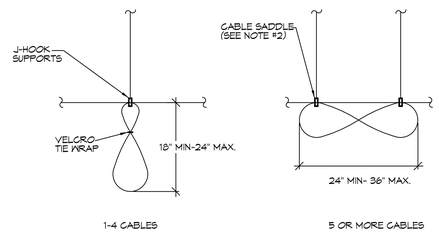

NOTE:
1. ALL SERVICE LOOPS SHALL BE FORMED IN FIGURE 8 CONFIGURATION
2. SADDLE SHALL BE SIZED TO HOLD QUANITY OF CABLES REQUIRED PER MANUFACTURE REQ.

TYPICAL SERVICE LOOP
NO SCALE
5 / E4.6

NOTE:
1. HAND WRITTEN LABELS ARE NOT PERMITTED
2. CABLES SHALL NOT BE PULLED UNTIL CONDUIT BELL GUARDS HAVE BEEN PLACED.

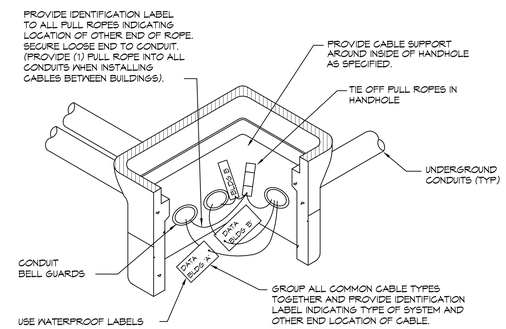

COMMUNICATIONS HANDHOLE LABELING DETAIL (TYP)
NO SCALE
6 / E4.6

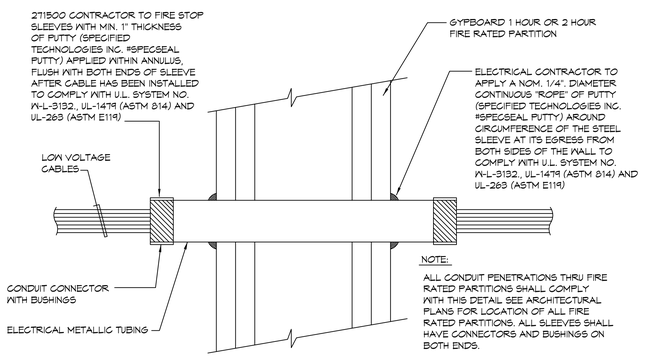

NOTE:
ALL CONDUIT PENETRATIONS THRU FIRE RATED PARTITIONS SHALL COMPLY WITH THIS DETAIL SEE ARCHITECTURAL PLANS FOR LOCATION OF ALL FIRE RATED PARTITIONS. ALL SLEEVES SHALL HAVE CONNECTORS AND BUSHINGS ON BOTH ENDS.

COMMUNICATIONS CABLES SLEEVES PENETRATION THRU FIRE RATED PARTITIONS
NO SCALE
7 / E4.6

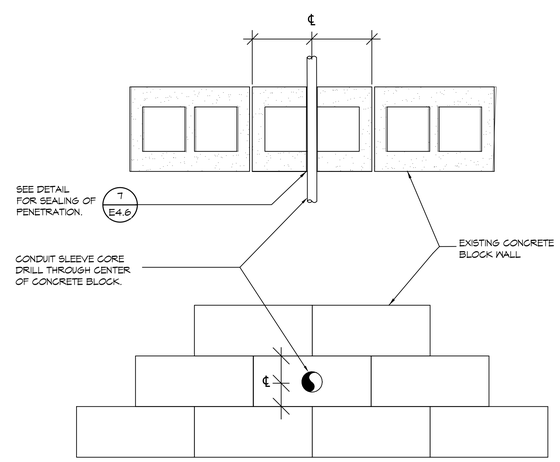

CONCRETE BLOCK SLEEVE DETAIL
NO SCALE
8 / E4.6

#21087
STAMPS
6/21/2022 9:09:02 AM

IDENTIFICATION STAMP
DIV. OF THE STATE ARCHITECT
APP: 04-120895 INC:
REVIEWED FOR
SS ☑ FLS ☑ ACS ☑
DATE: 06/27/2022

JOHNSON CONSULTING ENGINEERS, INC.
Power | Lighting | Multimedia
Communications | Data Networking
12875 Brookprinter Place, Suite 300
Poway, CA 92064
P 858.679.4030 | F 858.513.0559
www.jce-inc.com
CONSULTANT BRANDING

RUHNAU CLARKE ARCHITECTS

GHS KITCHEN & WEIGHTROOM MOD:

PROJECT No. :1-30-55
6/21/2022 9:09:02 AM

DRAWN BY: CHECKED BY:
ISSUE No.____ DATE____ DESCRIPTION____
ISSUE No.____ DATE____ DESCRIPTION____
ISSUE No.____ DATE____ DESCRIPTION____
ISSUE No.____ DATE____ DESCRIPTION____
REVISION No.____ DATE____ DESCRIPTION____
REVISION No.____ DATE____ DESCRIPTION____
REVISION No.____ DATE____ DESCRIPTION____
REVISION No.____ DATE____ DESCRIPTION____

RUHNAUCLARKE.COM
3775 TENTH STREET, RIVERSIDE CALIFORNIA 92501 (951) 684 4664 / 5751 PALMER WAY, SUITE C, CARLSBAD CALIFORNIA 92010 (760) 438 5899

GHS KITCHEN & WEIGHTROOM MOD
GROSSMONT HIGH SCHOOL
1100 MURRAY DR, EL CAJON, CA 92020
GROSSMONT UNION HIGH SCHOOL

COMMUNICATION DETAILS

E4.6

1-30-55

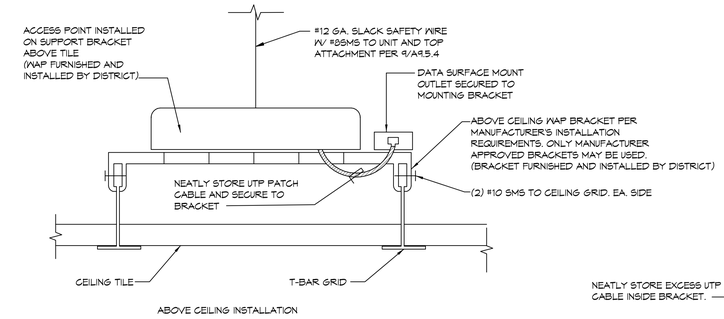

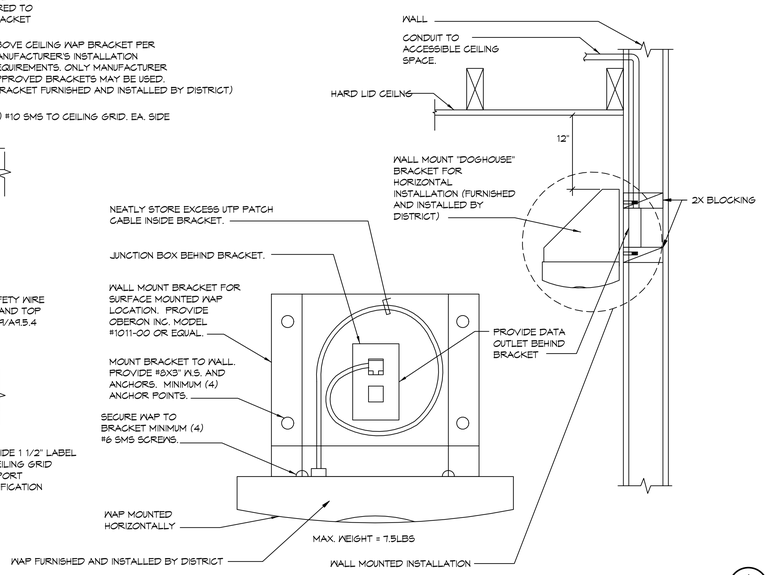

WIRELESS ACCESS POINT ANTENNA MOUNTING DETAIL
NO SCALE
1 / E4.7

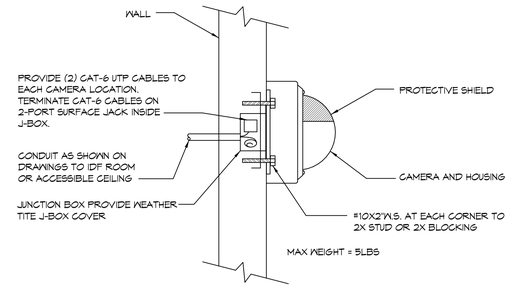

WALL MOUNTED CAMERA DETAIL - DOME CAMERA
NO SCALE
2 / E4.7

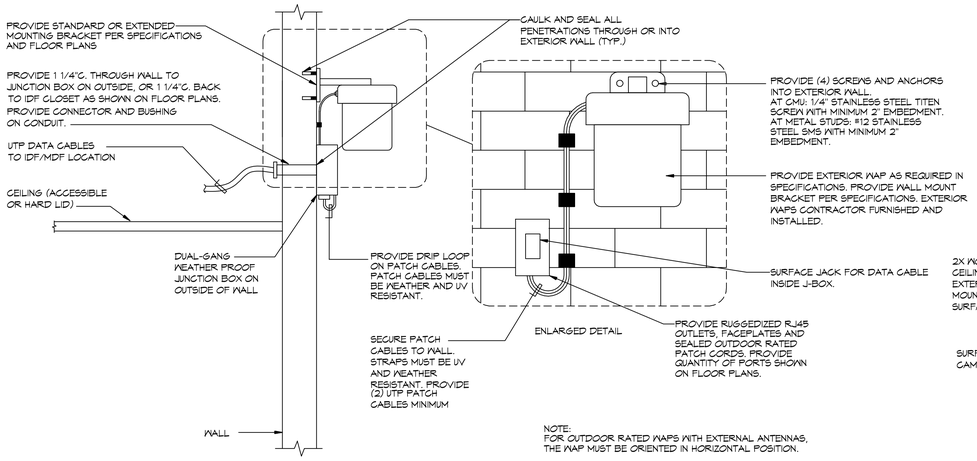

EXTERIOR OUTDOOR RATED WIRELESS ACCESS POINT MOUNTING DETAILS
NO SCALE
3 / E4.7

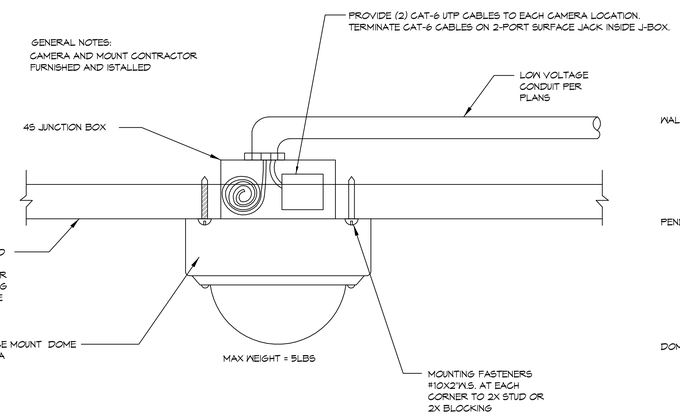

SURFACE MOUNTED INTERIOR/EXTERIOR CEILING MOUNT CAMERA
NO SCALE
4 / E4.7

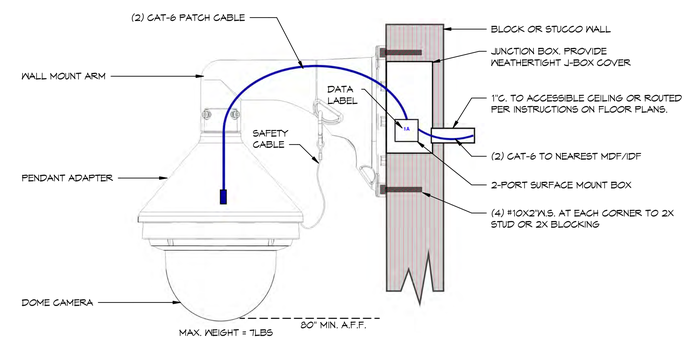

TYPICAL DOME CAMERA WALL MOUNT
NO SCALE
5 / E4.7

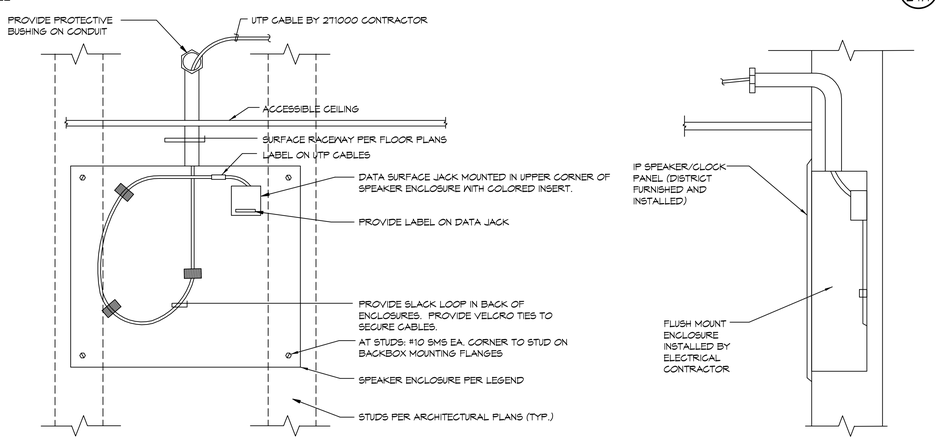

FLUSH MOUNTED IP SPEAKER/CLOCK
NO SCALE
6 / E4.7

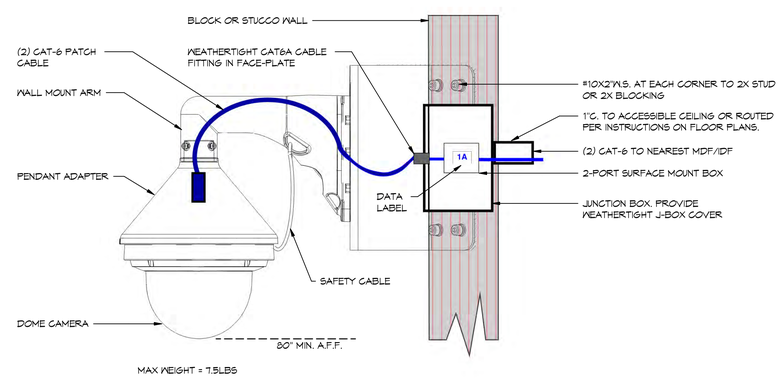

TYPICAL DOME CAMERA CORNER MOUNT
NO SCALE
7 / E4.7

#21087
STAMPS
6/21/2022 9:09:04 AM

IDENTIFICATION STAMP
DIV. OF THE STATE ARCHITECT
APP: 04-120895 INC:
REVIEWED FOR
SS ☑ FLS ☑ ACS ☑
DATE: 06/27/2022

JOHNSON CONSULTING ENGINEERS, INC.
Power | Lighting | Multimedia
Communications | Data Networking
12875 Brookprinter Place, Suite 300
Poway, CA 92064
P 858.679.4030 | F 858.513.0559
www.jce-inc.com
CONSULTANT BRANDING

RUHNAU CLARKE ARCHITECTS

GHS KITCHEN & WEIGHTROOM MOD:

PROJECT No. :1-30-55
6/21/2022 9:09:04 AM

DRAWN BY: CHECKED BY:
ISSUE No.____ DATE____ DESCRIPTION____
REVISION No.____ DATE____ DESCRIPTION____

RUHNAUCLARKE.COM
3775 TENTH STREET, RIVERSIDE CALIFORNIA 92501 (951) 684 4664 / 5751 PALMER WAY, SUITE C, CARLSBAD CALIFORNIA 92010 (760) 438 5899

GHS KITCHEN & WEIGHTROOM MOD
GROSSMONT HIGH SCHOOL
1100 MURRAY DR, EL CAJON, CA 92020
GROSSMONT UNION HIGH SCHOOL

COMMUNICATION DETAILS

E4.7

1-30-55

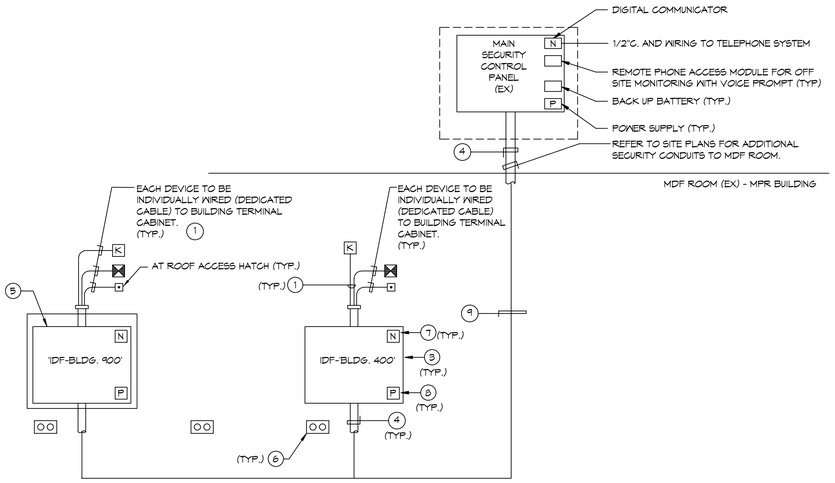

GENERAL NOTES:

1. ALL CONDUITS, POWER OUTLETS AND GROUNDING CONNECTIONS, BACKBOARDS AND REMOTE BUILDING COMMUNICATIONS CABINETS TO BE PROVIDED BY ELECTRICAL CONTRACTOR.
2. REFERENCE SPECIFICATIONS FOR ADDITIONAL REQUIREMENTS, AND FLOOR PLANS FOR ADDITIONAL EQUIPMENT ITEMS REQUIRED, AND THIER LOCATIONS.
3. WHERE OPEN CONDUCTORS ARE INSTALLED ABOVE ACCESSIBLE CEILINGS, ALL CONDUCTORS SHALL BE NEATLY BUNDLED TOGETHER AND SUPPORTED FROM ROOF STRUCTURE. WHERE BUNDLED WITH OTHER COMMUNICATION SYSTEMS, IDENTIFYING TAGS SHALL BE PROVIDED TO IDENTIFY THESE CONDUCTORS FROM OTHER SYSTEMS.
4. PROVIDE I.D. LABEL ON EACH END OF EACH CABLE.
5. ALL SECURITY CABLING MUST BE SUPPORTED FROM THE STRUCTURE THE SAME AS REQUIRED FOR VOICE/DATA CABLING. SEE DETAIL 4/E4.6 FOR REQUIREMENTS.

KEY NOTES:

1. WIRING AS REQUIRED BY MANUFACTURER.
2. PROVIDE MINIMUM (2) 2"C. CONDUIT STUBBED INTO ACCESSIBLE CEILING SPACE. PROVIDE PLASTIC BUSHINGS AT EACH END. PROVIDE ADDITIONAL CONDUITS AS REQUIRED TO ACCOMODATE ALL CABLES PLUS 40% FUTURE CAPACITY. COORDINATE WITH 28/600 CONTRACTOR.
3. COMMUNICATIONS BACKBOARD. SEE FLOOR PLANS FOR IDF ROOMS WITH A COMMUNICATIONS BACKBOARD. PROVIDE ADEQUATE SPACE FOR FUTURE PUNCH BLOCKS.
4. SITE CONDUIT CONNECITON INTO IDF-ROOM. PROVIDE PLASTIC BUSHINGS AT EACH END
5. IDF-BLDG.400' FOR TYPICAL NOTES.
6. DUPLEX RECEPTACLE LOCATED 6" BELOW CABINET. FIELD VERIFY EXACT LOCATION WITH SECURITY/INTRUSION CONTRACTOR PRIOR TO ROUGH IN. REFER TO IDF ROOM ENLARGED FLOOR PLAN FOR ADDITIONAL REQUIREMENTS.
7. DIGITAL COMMUNICATOR
8. POWER SUPPLY SHALL BE SIZED WTIH A MINIMUM 50% SPARE CAPACITY
9. ALL SITE DISTRIBUTION CABLES SHALL BE MULTI-CONDUCTOR. PROVIDE CABLE TO EACH BUILDING PLUS 25% EXPANSION CAPACITY

TYPICAL SECURITY/INTRUSION DETECTION SYSTEM DIAGRAM
NO SCALE
1 / E4.8

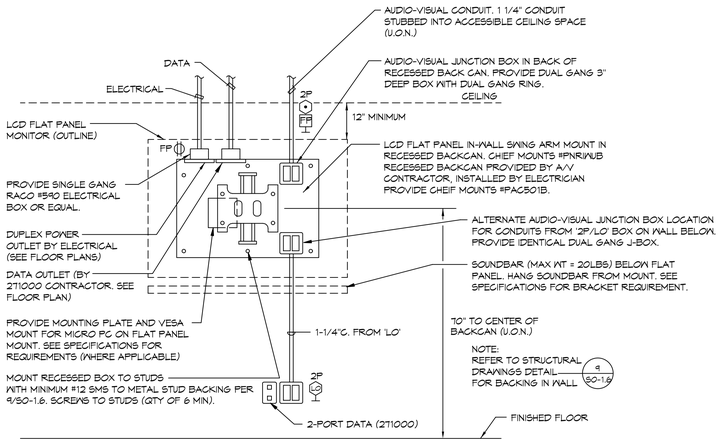

NOTE: FINAL FLAT PANEL MODEL CHOSEN MAY EFFECT MOUNTING HEIGHT. REFER TO FLOOR PLANS PRIOR TO INSTALLING MOUNT, AS FLOOR PLANS MAY SHOW A DIFFERENT MOUNTING HEIGHT. MAX. FLAT PANEL WEIGHT = 115LBS

LCD FLAT PANEL INSTALLATION DETAIL - RECESSED MOUNT
NO SCALE
2 / E4.8

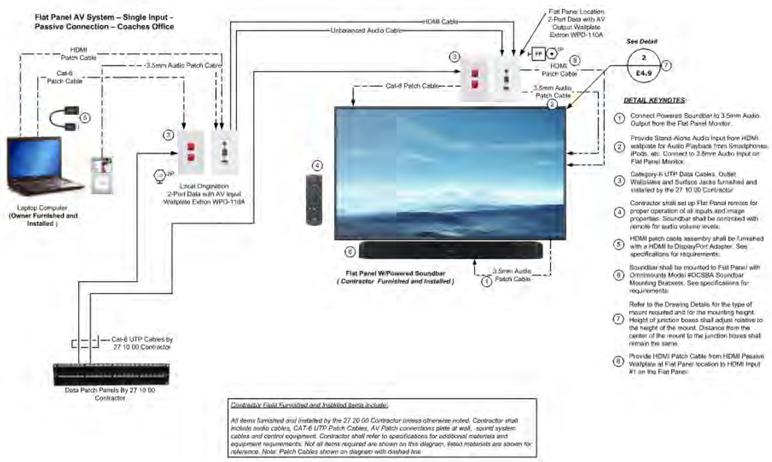

FLAT PANEL AUDIO-VISUAL SYSTEM - PASSIVE SINGLE INPUT
NO SCALE
3 / E4.8

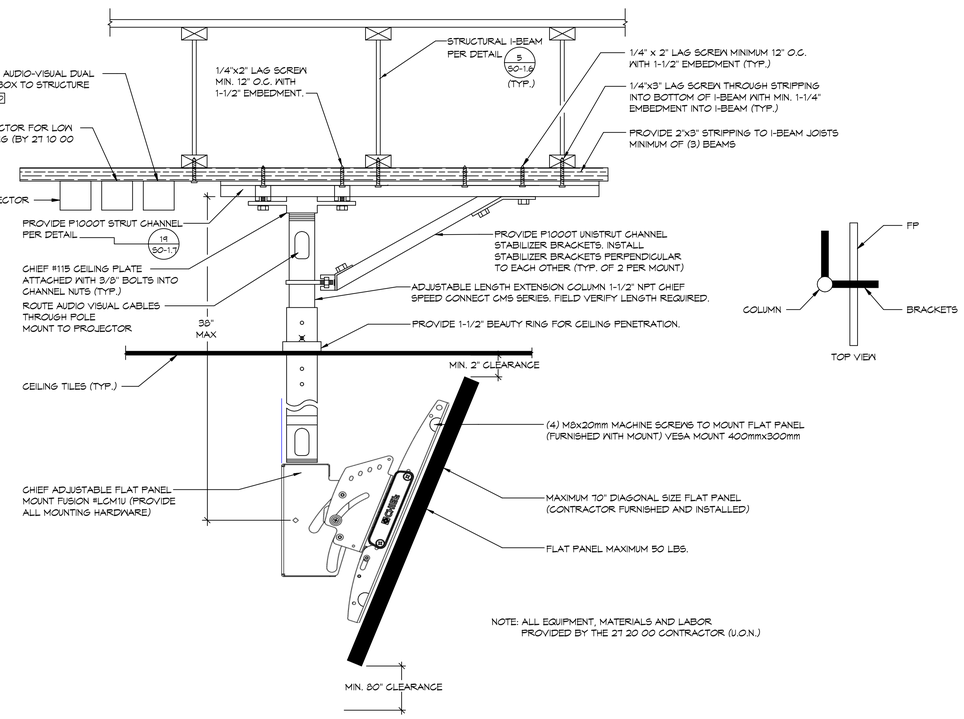

FLAT PANEL CEILING POLE MOUNT - MENU BOARDS IN KITCHEN
NO SCALE
4 / E4.8

#21087 STAMPS
6/21/2022 9:09:06 AM

IDENTIFICATION STAMP
DIV. OF THE STATE ARCHITECT
APP: 04-120895 INC:
REVIEWED FOR
SS ☑ FLS ☑ ACS ☑
DATE: 06/27/2022
FOR TRACKING PURPOSES ONLY

JOHNSON CONSULTING ENGINEERS, INC.
Power | Lighting | Multimedia
Communications | Data Networking
12875 Brookprinter Place, Suite 300
Poway, CA 92064
P 858.679.4030 | F 858.513.0559
www.jce-inc.com
CONSULTANT BRANDING

RUHNAU CLARKE ARCHITECTS

GHS KITCHEN & WEIGHTROOM MOD:

PROJECT No. :1-30-55
6/21/2022 9:09:06 AM

DRAWN BY: _____ CHECKED BY: _____

ISSUE No.____ DATE_____ DESCRIPTION_____
ISSUE No.____ DATE_____ DESCRIPTION_____
ISSUE No.____ DATE_____ DESCRIPTION_____
ISSUE No.____ DATE_____ DESCRIPTION_____
REVISION No.____ DATE_____ DESCRIPTION_____
REVISION No.____ DATE_____ DESCRIPTION_____
REVISION No.____ DATE_____ DESCRIPTION_____
REVISION No.____ DATE_____ DESCRIPTION_____

RUHNAUCLARKE.COM
3775 TENTH STREET, RIVERSIDE CALIFORNIA 92501 (951) 684 4664 / 5751 PALMER WAY, SUITE C, CARLSBAD CALIFORNIA 92010 (760) 438 5899

GHS KITCHEN & WEIGHTROOM MOD
GROSSMONT HIGH SCHOOL
1100 MURRAY DR, EL CAJON, CA 92020
GROSSMONT UNION HIGH SCHOOL

COMMUNICATION DETAILS

E4.8

1-30-55

Classroom with Ceiling Mounted Projector Installation

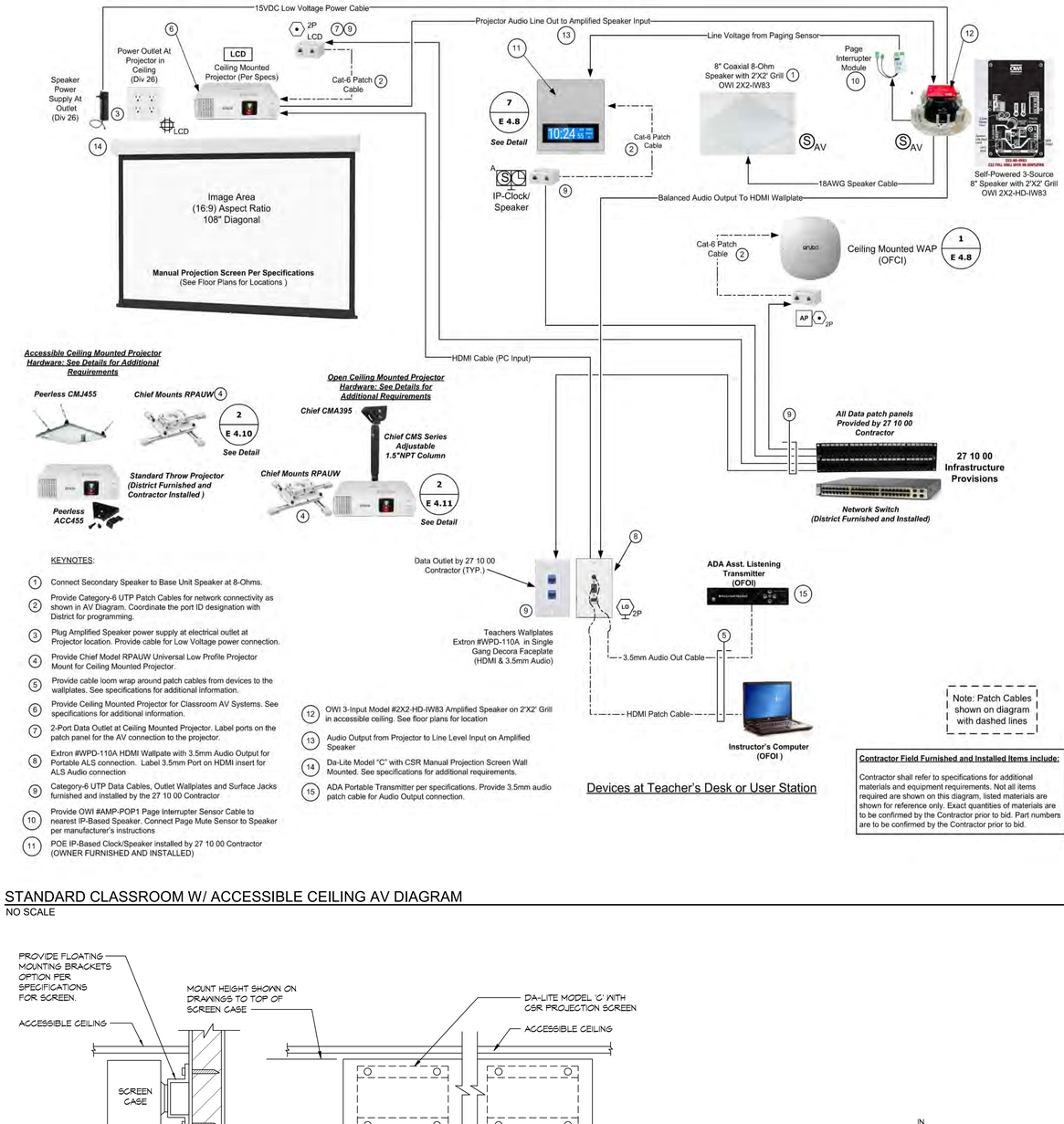

KEYNOTES:

1. Connect Secondary Speaker to Base Unit Speaker at 8-Ohms.
2. Provide Category-6 UTP Patch Cables for network connectivity as shown in AV Diagram. Coordinate the port ID designation with District for programming.
3. Plug Amplified Speaker power supply at electrical outlet at Projector location. Provide cable for Low Voltage power connection.
4. Provide Chief Model RPAUW Universal Low Profile Projector Mount for Ceiling Mounted Projector.
5. Provide cable loom wrap around patch cables from devices to the wallplates. See specifications for additional information.
6. Provide Ceiling Mounted Projector for Classroom AV Systems. See specifications for additional information.
7. 2-Port Data Outlet at Ceiling Mounted Projector. Label ports on the patch panel for the AV connection to the projector.
8. Extron #WPD-110A HDMI Wallpate with 3.5mm Audio Output for Portable ALS connection. Label 3.5mm Port on HDMI insert for ALS Audio connection
9. Category-6 UTP Data Cables, Outlet Wallplates and Surface Jacks furnished and installed by the 27 10 00 Contractor
10. Provide OWI #AMP-POP1 Page Interrupter Sensor Cable to nearest IP-Based Speaker. Connect Page Mute Sensor to Speaker per manufacturer's instructions
11. POE IP-Based Clock/Speaker installed by 27 10 00 Contractor (OWNER FURNISHED AND INSTALLED)
12. OWI 3-Input Model #2X2-HD-IW83 Amplified Speaker on 2'X2' Grill in accessible ceiling. See floor plans for location
13. Audio Output from Projector to Line Level Input on Amplified Speaker
14. Da-Lite Model "C" with CSR Manual Projection Screen Wall Mounted. See specifications for additional requirements.
15. ADA Portable Transmitter per specifications. Provide 3.5mm audio patch cable for Audio Output connection.

Note: Patch Cables shown on diagram with dashed lines

Contractor Field Furnished and Installed Items include:

Contractor shall refer to specifications for additional materials and equipment requirements. Not all items required are shown on this diagram, listed materials are shown for reference only. Exact quantities of materials are to be confirmed by the Contractor prior to bid. Part numbers are to be confirmed by the Contractor prior to bid.

STANDARD CLASSROOM W/ ACCESSIBLE CEILING AV DIAGRAM

NO SCALE

1 / E4.9

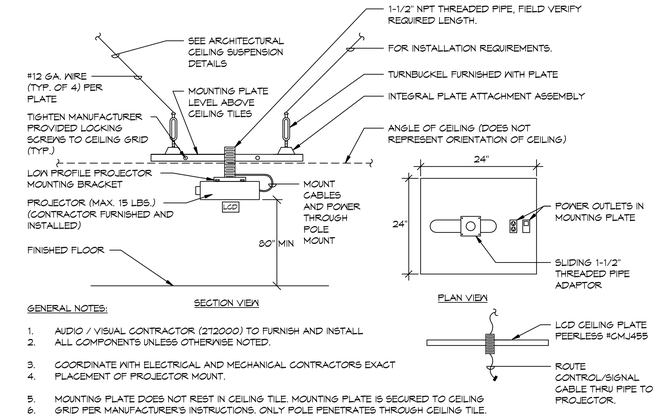

GENERAL NOTES:

1. AUDIO / VISUAL CONTRACTOR (272000) TO FURNISH AND INSTALL
2. ALL COMPONENTS UNLESS OTHERWISE NOTED.
3. COORDINATE WITH ELECTRICAL AND MECHANICAL CONTRACTORS EXACT
4. PLACEMENT OF PROJECTOR MOUNT.
5. MOUNTING PLATE DOES NOT REST IN CEILING TILE. MOUNTING PLATE IS SECURED TO CEILING
6. GRID PER MANUFACTURER'S INSTRUCTIONS. ONLY POLE PENETRATES THROUGH CEILING TILE.
7. SEE SPECIFICAIONS FOR CHIEF #RPAUW UNIVERSAL PROJECTOR MOUNT. PROJECTOR MOUNT SHALL BE ADJUSTED TO FIT FINAL PROJECTOR PROVIDED.
8. PROJECTOR SHALL BE CONTRACTOR FURNISHED AND INSTALLED. PROVIDE MOUNTING ASSEMBLY ONLY PER DRAWINGS AND SPECIFICATIONS.

CEILING PROJECTOR MOUNTING DETAIL

NO SCALE

2 / E4.9

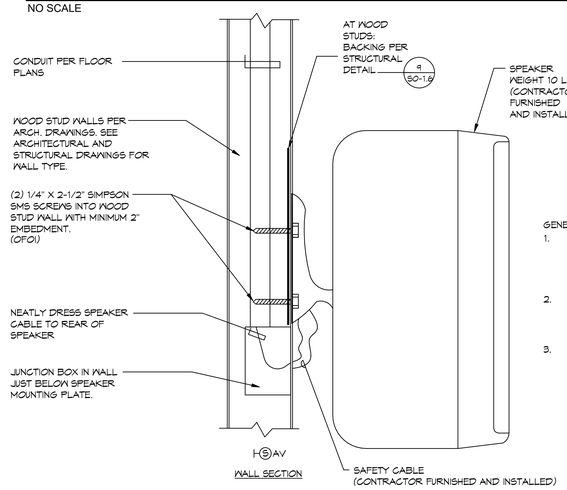

GENERAL NOTES:

1. ATTACH SPEAKER MOUNT TO MOUNTING BRACKET PER MANUFACTURER'S RECOMMENDATIONS.
2. TOTAL WORKING LOAD LIMIT SHALL NOT EXCEED 10 LBS.
3. ATTACH SAFETY CABLE TO WALL FOR SPEAKER BELOW SPEAKER.

WALL MOUNTED SPEAKER DETAIL - SMALL AV SYSTEM

NO SCALE

3 / E4.9

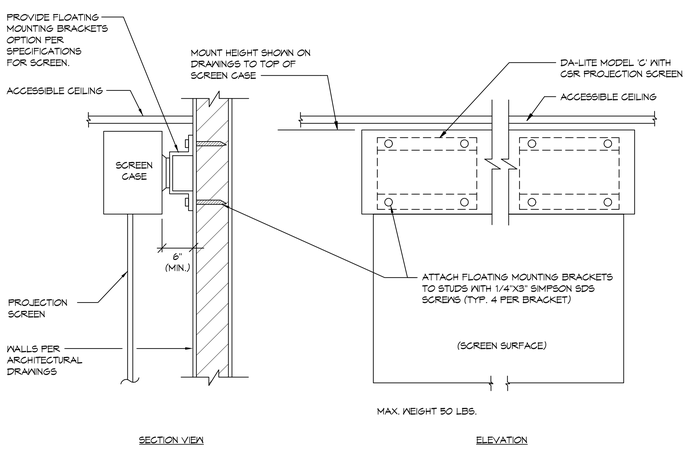

WALL MOUNTED PROJECTION SCREEN DETAIL

NO SCALE

4 / E4.9

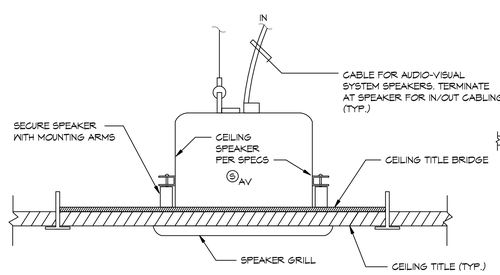

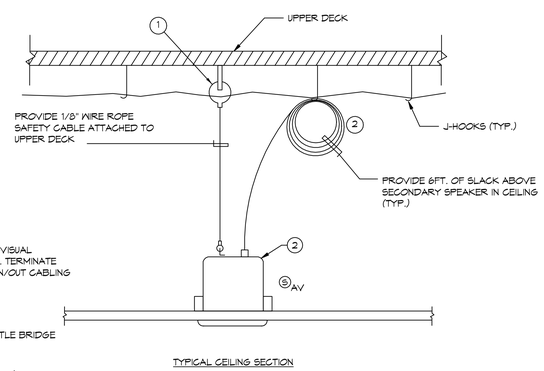

DETAIL KEY NOTES:

1. ANCHOR INTO DECK FOR SAFETY CABLE (1) 1/4/20x2" SAMMY TAPCON CEILING SCREW FOR CONCRETE OR (1) 1/4"X3" EYE LAG FOR WOOD. MINIMUM 1 1/2" EMBEDMENT.
2. NEATLY DRESS ALL CABLING FROM AMPLIFIED SPEAKER ABOVE CEILING. PROVIDE A MINIMUM OF 3 FEET OF SLACK ON ALL CABLES ABOVE AMPLIFIED SPEAKER.

AUDIO-VISUAL SYSTEM CEILING SPEAKER MOUNTING DETAIL

NO SCALE

5 / E4.9

#21087 STAMPS 6/21/2022 9:09:07 AM

IDENTIFICATION STAMP
DIV. OF THE STATE ARCHITECT
APP: 04-120895 INC:
REVIEWED FOR
SS ☑ FLS ☑ ACS ☑
DATE: 06/27/2022

JOHNSON CONSULTING ENGINEERS, INC.
Power | Lighting | Multimedia
Communications | Data Networking
12875 Brookprinter Place, Suite 300
Poway, CA 92064
P 858.679.4030 | F 858.513.0559
www.jce-inc.com
CONSULTANT BRANDING

RUHNAU CLARKE ARCHITECTS

GHS KITCHEN & WEIGHTROOM MOD:

PROJECT No. :1-30-55
6/21/2022 9:09:07 AM

DRAWN BY: CHECKED BY:
ISSUE No.____ DATE____ DESCRIPTION____ REVISION No.____ DATE____ DESCRIPTION____

RUHNAUCLARKE.COM
3775 TENTH STREET, RIVERSIDE CALIFORNIA 92501 (951) 684 4664 / 5751 PALMER WAY, SUITE C, CARLSBAD CALIFORNIA 92010 (760) 438 5899

GHS KITCHEN & WEIGHTROOM MOD
GROSSMONT HIGH SCHOOL
1100 MURRAY DR, EL CAJON, CA 92020
GROSSMONT UNION HIGH SCHOOL

AUDIO-VISUAL DETAILS

E4.9

1-30-55

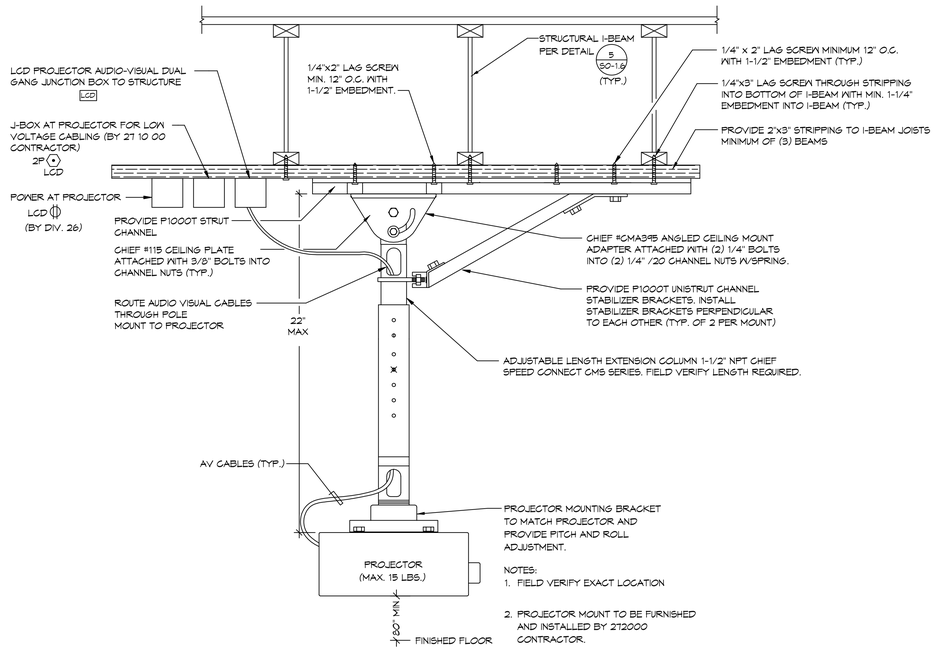

NOTES:
1. FIELD VERIFY EXACT LOCATION
2. PROJECTOR MOUNT TO BE FURNISHED AND INSTALLED BY 272000 CONTRACTOR.

CEILING MOUNTED PROJECTOR DETAIL - NON ACCESSIBLE CEILING

NO SCALE

1
E4.10

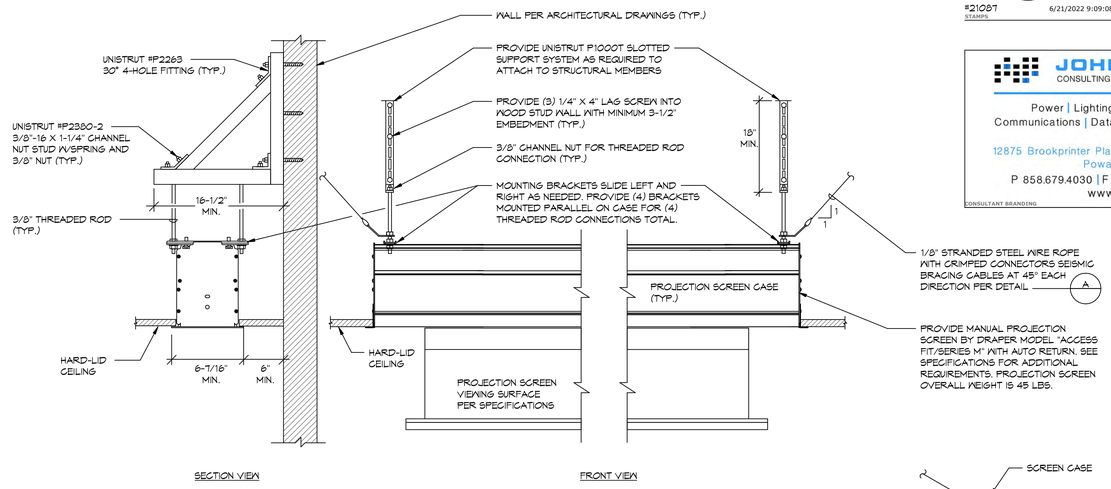

SECTION VIEW

FRONT VIEW

NOTE: PROVIDE OPTIONAL 6-FOOT ALUMINUM PULL ROD

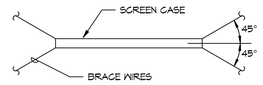

PLAN VIEW
A

RECESSED NON-TENSIONED MANUAL SCREEN MOUNTING DETAIL

NO SCALE

2
E4.10

#21087
STAMPS
6/21/2022 9:09:08 AM

IDENTIFICATION STAMP
DIV. OF THE STATE ARCHITECT
APP: 04-120895 INC:
REVIEWED FOR
SS ☑ FLS ☑ ACS ☑
DATE: 06/27/2022

JOHNSON CONSULTING ENGINEERS, INC.
Power | Lighting | Multimedia
Communications | Data Networking
12875 Brookprinter Place, Suite 300
Poway, CA 92064
P 858.679.4030 | F 858.513.0559
www.jce-inc.com
CONSULTANT BRANDING

RUHNAU CLARKE ARCHITECTS

GHS KITCHEN & WEIGHTROOM MOD:

PROJECT No. :1-30-55
6/21/2022 9:09:08 AM

DRAWN BY: CHECKED BY:
ISSUE No.____ DATE____ DESCRIPTION____
REVISION No.____ DATE____ DESCRIPTION____

RUHNAUCLARKE.COM
3775 TENTH STREET, RIVERSIDE CALIFORNIA 92501 (951) 684 4664 / 5751 PALMER WAY, SUITE C, CARLSBAD CALIFORNIA 92010 (760) 438 5899

GHS KITCHEN & WEIGHTROOM MOD
GROSSMONT HIGH SCHOOL
1100 MURRAY DR, EL CAJON, CA 92020
GROSSMONT UNION HIGH SCHOOL

AUDIO-VISUAL DETAILS

E4.10

1-30-55

FIRE ALARM SYMBOLS LEGEND:

V1 / 15	CEILING MOUNTED FLASHING LIGHT STROBE (15 = STROBE CANDELA RATING) (V1 = SIGNAL CIRCUIT IDENTIFICATION VISUAL)
A1 V1 / 15	CEILING MOUNTED COMBINATION HORN/STROBE (15 = STROBE CANDELA RATING) (V1 = SIGNAL CIRCUIT IDENTIFICATION VISUAL) A1=AUDIO TAP AT 1/4 WATT (U.O.N.)
A1 P	WALL MOUNTED WEATHERPROOF EXTERIOR SPEAKER MOUNTED +90" A.F.F. TO BOTTOM OF DEVICE (A1 = SIGNAL CIRCUIT IDENTIFICATION AUDIO) TAP AT 2 WATT (U.O.N.)
S	CEILING MOUNTED SMOKE DETECTOR
H	CEILING MOUNTED HEAT DETECTOR
FACP	MAIN FIRE ALARM CONTROL PANEL
FA	REMOTE FIRE ALARM POWER EXTENDER
TP	NETWORK TRANSPONDER
KHS	KITCHEN HOOD FIRE SUPPRESSION SYSTEM CONTROL PANEL
DSM	DUAL SYNC MODULE (SEE RISER DIAGRAM FOR LOCATION)
R	ADDRESSABLE RELAY MODULE
M	ADDRESSABLE MONITOR MODULE
EOL-A	END OF LINE RESISTOR AUDIO
EOL-V	END OF LINE RESISTOR VISUAL

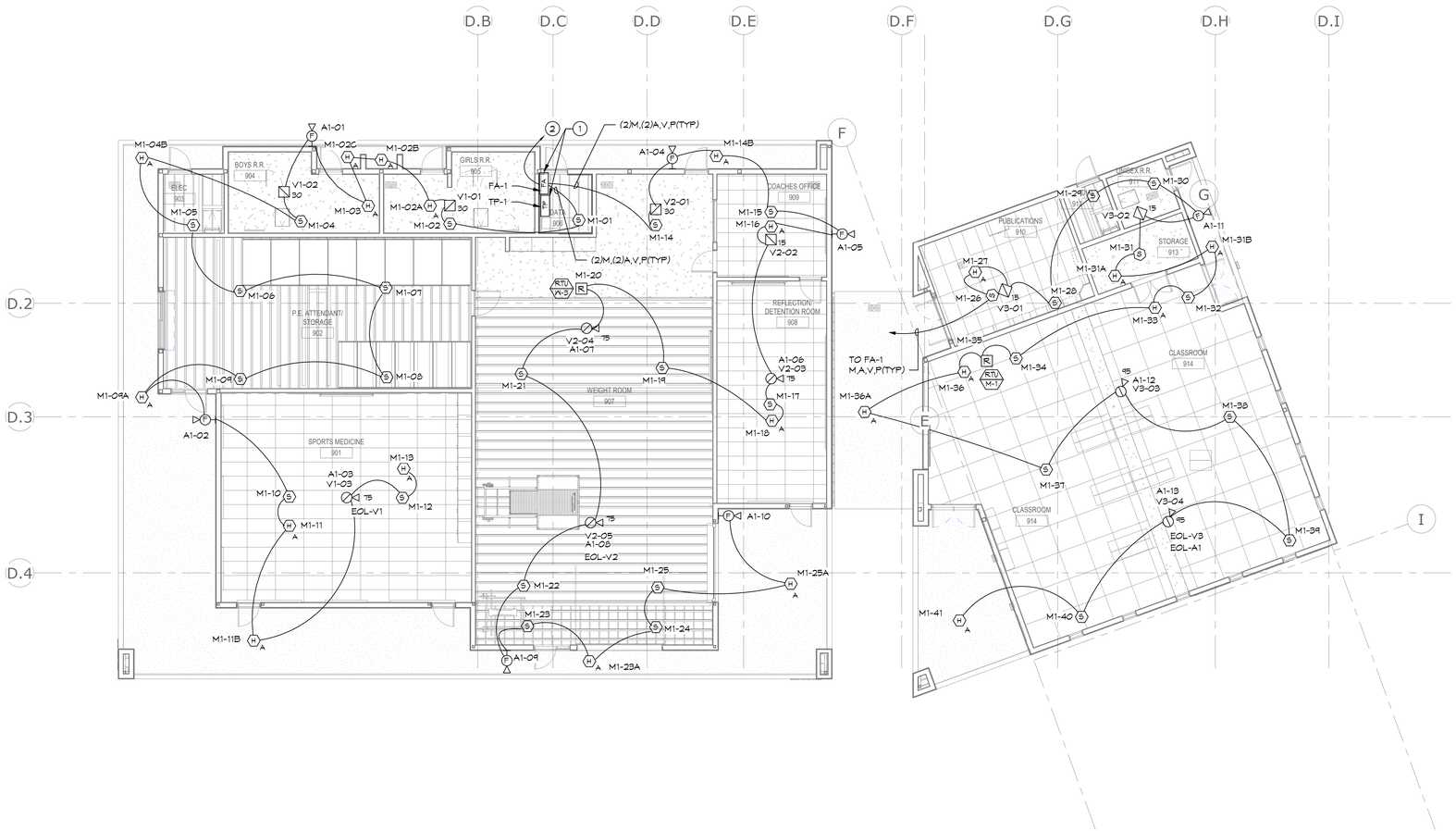

GENERAL NOTES:

1. REFERENCE ARCHITECTURAL INTERIOR ELEVATIONS FOR EXACT LOCATION OF ALL WALL MOUNTED DEVICES.
2. REFERENCE E5 AND E6 SERIES SHEETS FOR TYPICAL CONDUIT AND BACKBOX INSTALLATION DETAILS.
3. REFERENCE RISER DIAGRAMS FOR TYPICAL CONDUIT SIZES AND INITIATION ZONE CIRCUIT IDENTIFICATIONS.
4. REFERENCE MECHANICAL PLANS FOR EXACT LOCTION OF ALL DUCT DETECTORS AND SMOKE DAMPER LOCATIONS.
5. UNLESS OTHERWISE NOTED SOLID LINES BETWEEN DEVICES SHALL BE 1" E.M.T. ROUTED CONCEALED ABOVE CEILINGS OR IN WALLS. DASHED LINES INDICATE 1" P.V.C. UNDERGROUND CONDUIT. ALL WIRING TO BE PROVIDED PER MANUFACTURER SHOP DRAWINGS.
6. CONTRACTOR SHALL PROVIDE CEILING ACCESS PANEL AT ALL NON-LAYIN TYPE CEILINGS, WHERE HEAT DETECTOR ABOVE CEILING IS INDICATED.
7. PROVIDE WIRE PROTECTIVE GUARD OVER ALL FIRE ALARM DEVICES LOCATED IN THE FOLLOWING AREAS: GYMNASIUM, LOCKER ROOMS, SHOP AREAS, AND ANY OTHER AREA WHERE DEVICES MAY BE SUBJECT TO CONTACT.

KEY NOTES:

1. PROVIDE DEDICATED 120 VOLT CIRCUIT TO PANELS CONNECT TO "RED LOCK ON BREAKER". REFER TO POWER E3 SERIES SHEETS FOR CIRCUIT INFORMATION.
2. PROVIDE CONNECTION TO "FACP", REFER TO SITE PLAN SHEET E1.1.
3. PROVIDE CONNECTION TO AIR CONDITIONING CONTROL CIRCUIT FOR AUTOMATIC SHUT OFF OF UNIT UPON SMOKE DETECTION, VL.

FIRE ALARM NOTE:
THIS FIRE ALARM DESIGN IS A COMPLETE PLAN SUBMITTAL IN ACCORDANCE WITH 2019 CBC 907.1.

FULLY AUTOMATIC FIRE ALARM DESIGN:
THIS PROJECT IS DESIGNED TO COMPLY WITH ALL REQUIREMENTS FOR A FULLY PROTECTED AUTOMATIC FIRE ALARM SYSTEM.

#21087
STAMPS
6/21/2022 9:09:11 AM

IDENTIFICATION STAMP
DIV. OF THE STATE ARCHITECT
APP: 04-120895 INC:
REVIEWED FOR
SS ☑ FLS ☑ ACS ☑
DATE: 06/27/2022
ADD'L REVIEW REQUIRED

JOHNSON CONSULTING ENGINEERS, INC.
Power | Lighting | Multimedia
Communications | Data Networking
12875 Brookprinter Place, Suite 300
Poway, CA 92064
P 858.679.4030 | F 858.513.0559
www.jce-inc.com
CONSULTANT BRANDING

RUHNAU CLARKE ARCHITECTS

BLDG 900 FLOOR PLAN - FIRE ALARM | SCALE: 1/8" = 1'-0" | REF.: / | 1

NORTH

GHS KITCHEN & WEIGHTROOM MOD:

PROJECT No. :1-30-55
6/21/2022 9:09:11 AM

DRAWN BY: CHECKED BY:

ISSUE No.____	DATE____	DESCRIPTION____	REVISION No.____	DATE____	DESCRIPTION____
ISSUE No.____	DATE____	DESCRIPTION____	REVISION No.____	DATE____	DESCRIPTION____
ISSUE No.____	DATE____	DESCRIPTION____	REVISION No.____	DATE____	DESCRIPTION____
ISSUE No.____	DATE____	DESCRIPTION____	REVISION No.____	DATE____	DESCRIPTION____

RUHNAUCLARKE.COM
3775 TENTH STREET, RIVERSIDE CALIFORNIA 92501 (951) 684-4664 / 5751 PALMER WAY, SUITE C, CARLSBAD CALIFORNIA 92010 (760) 438-5899

GHS KITCHEN & WEIGHTROOM MOD
GROSSMONT HIGH SCHOOL
1100 MURRAY DR, EL CAJON, CA 92020
GROSSMONT UNION HIGH SCHOOL

BLDG 900 FLOOR PLAN - FIRE ALARM

E5.1

1-30-55

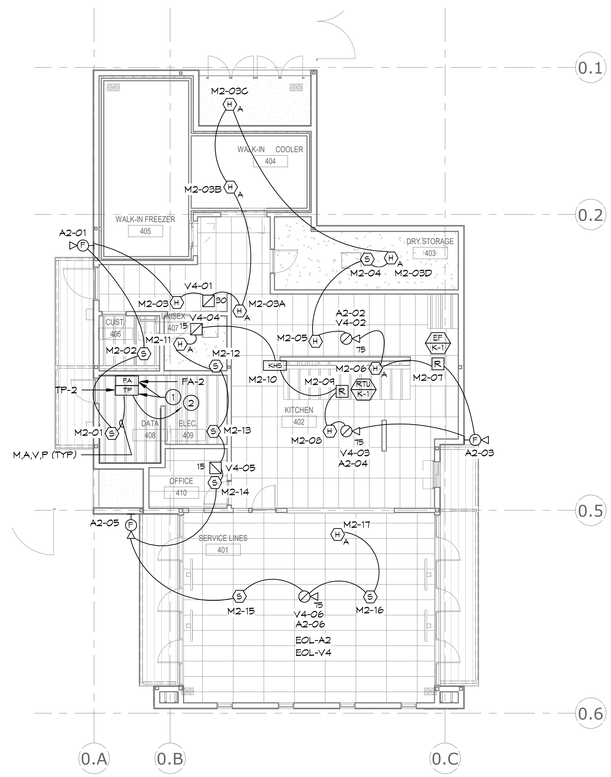

FIRE ALARM SYMBOLS LEGEND:

- VI — CEILING MOUNTED FLASHING LIGHT STROBE (15 = STROBE CANDELA RATING) (VI = SIGNAL CIRCUIT IDENTIFICATION VISUAL)
- AI,VI — CEILING MOUNTED COMBINATION HORN/STROBE (15 = STROBE CANDELA RATING) (VI = SIGNAL CIRCUIT IDENTIFICATION VISUAL) A1=AUDIO TAP AT 1/4 WATT (U.O.N.)
- AI — WALL MOUNTED WEATHERPROOF EXTERIOR SPEAKER MOUNTED +90" A.F.F. TO BOTTOM OF DEVICE (AI = SIGNAL CIRCUIT IDENTIFICATION AUDIO) TAP AT 2 WATT (U.O.N.)
- S — CEILING MOUNTED SMOKE DETECTOR
- H — CEILING MOUNTED HEAT DETECTOR
- FACP — MAIN FIRE ALARM CONTROL PANEL
- FA — REMOTE FIRE ALARM POWER EXTENDER
- TP — NETWORK TRANSPONDER
- KHS — KITCHEN HOOD FIRE SUPPRESSION SYSTEM CONTROL PANEL
- DSM — DUAL SYNC MODULE (SEE RISER DIAGRAM FOR LOCATION)
- R — ADDRESSABLE RELAY MODULE
- M — ADDRESSABLE MONITOR MODULE
- EOL-A — END OF LINE RESISTOR AUDIO
- EOL-V — END OF LINE RESISTOR VISUAL

#21087
STAMPS
6/21/2022 9:09:14 AM

IDENTIFICATION STAMP
DIV. OF THE STATE ARCHITECT
APP: 04-120895 INC:
REVIEWED FOR
SS ☑ FLS ☑ ACS ☑
DATE: 06/27/2022
AGENCY
FIELD ENGINEER

JOHNSON CONSULTING ENGINEERS, INC.
Power | Lighting | Multimedia
Communications | Data Networking
12875 Brookprinter Place, Suite 300
Poway, CA 92064
P 858.679.4030 | F 858.513.0559
www.jce-inc.com
CONSULTANT BRANDING

RUHNAU CLARKE ARCHITECTS

GENERAL NOTES:

1. REFERENCE ARCHITECTURAL INTERIOR ELEVATIONS FOR EXACT LOCATION OF ALL WALL MOUNTED DEVICES.
2. REFERENCE E5 AND E6 SERIES SHEETS FOR TYPICAL CONDUIT AND BACKBOX INSTALLATION DETAILS.
3. REFERENCE RISER DIAGRAMS FOR TYPICAL CONDUIT SIZES AND INITIATION ZONE CIRCUIT IDENTIFICATIONS.
4. REFERENCE MECHANICAL PLANS FOR EXACT LOCTION OF ALL DUCT DETECTORS AND SMOKE DAMPER LOCATIONS.
5. UNLESS OTHERWISE NOTED SOLID LINES BETWEEN DEVICES SHALL BE 1" E.M.T. ROUTED CONCEALED ABOVE CEILINGS OR IN WALLS. DASHED LINES INDICATE 1" P.V.C. UNDERGROUND CONDUIT. ALL WIRING TO BE PROVIDED PER MANUFACTURER SHOP DRAWINGS.
6. CONTRACTOR SHALL PROVIDE CEILING ACCESS PANEL AT ALL NON-LAYIN TYPE CEILINGS, WHERE HEAT DETECTOR ABOVE CEILING IS INDICATED.
7. PROVIDE WIRE PROTECTIVE GUARD OVER ALL FIRE ALARM DEVICES LOCATED IN THE FOLLOWING AREAS: GYMNASIUM, LOCKER ROOMS, SHOP AREAS, AND ANY OTHER AREA WHERE DEVICES MAY BE SUBJECT TO CONTACT.

KEY NOTES:

1. PROVIDE DEDICATED 120 VOLT CIRCUIT TO PANELS CONNECT TO "RED LOCK ON BREAKER". REFER TO POWER E3 SERIES SHEETS FOR CIRCUIT INFORMATION.
2. PROVIDE CONNECTION TO "FACP", REFER TO SITE PLAN SHEET E1.1.
3. PROVIDE CONNECTION TO AIR CONDITIONING CONTROL CIRCUIT FOR AUTOMATIC SHUT OFF OF UNIT UPON SMOKE DETECTION, VL.

FIRE ALARM NOTE:
THIS FIRE ALARM DESIGN IS A COMPLETE PLAN SUBMITTAL IN ACCORDANCE WITH 2019 CBC 907.1.

FULLY AUTOMATIC FIRE ALARM DESIGN:
THIS PROJECT IS DESIGNED TO COMPLY WITH ALL REQUIREMENTS FOR A FULLY PROTECTED AUTOMATIC FIRE ALARM SYSTEM.

NORTH

KITCHEN FLOOR PLAN - FIRE ALARM

SCALE: 1/8" = 1'-0"
REF: /
1

GHS KITCHEN & WEIGHTROOM MOD:

PROJECT No. :1-30-55
6/21/2022 9:09:14 AM

DRAWN BY: CHECKED BY:

ISSUE No.____	DATE_____	DESCRIPTION_____	REVISION No.____	DATE_____	DESCRIPTION_____
ISSUE No.____	DATE_____	DESCRIPTION_____	REVISION No.____	DATE_____	DESCRIPTION_____
ISSUE No.____	DATE_____	DESCRIPTION_____	REVISION No.____	DATE_____	DESCRIPTION_____
ISSUE No.____	DATE_____	DESCRIPTION_____	REVISION No.____	DATE_____	DESCRIPTION_____

RUHNAUCLARKE.COM
3775 TENTH STREET, RIVERSIDE CALIFORNIA 92501(951) 684 4664 / 5751 PALMER WAY, SUITE C, CARLSBAD CALIFORNIA 92010(760) 438 5899

GHS KITCHEN & WEIGHTROOM MOD
GROSSMONT HIGH SCHOOL
1100 MURRAY DR, EL CAJON, CA 92020
GROSSMONT UNION HIGH SCHOOL

KITCHEN FLOOR PLAN - FIRE ALARM

E5.2

1-30-55

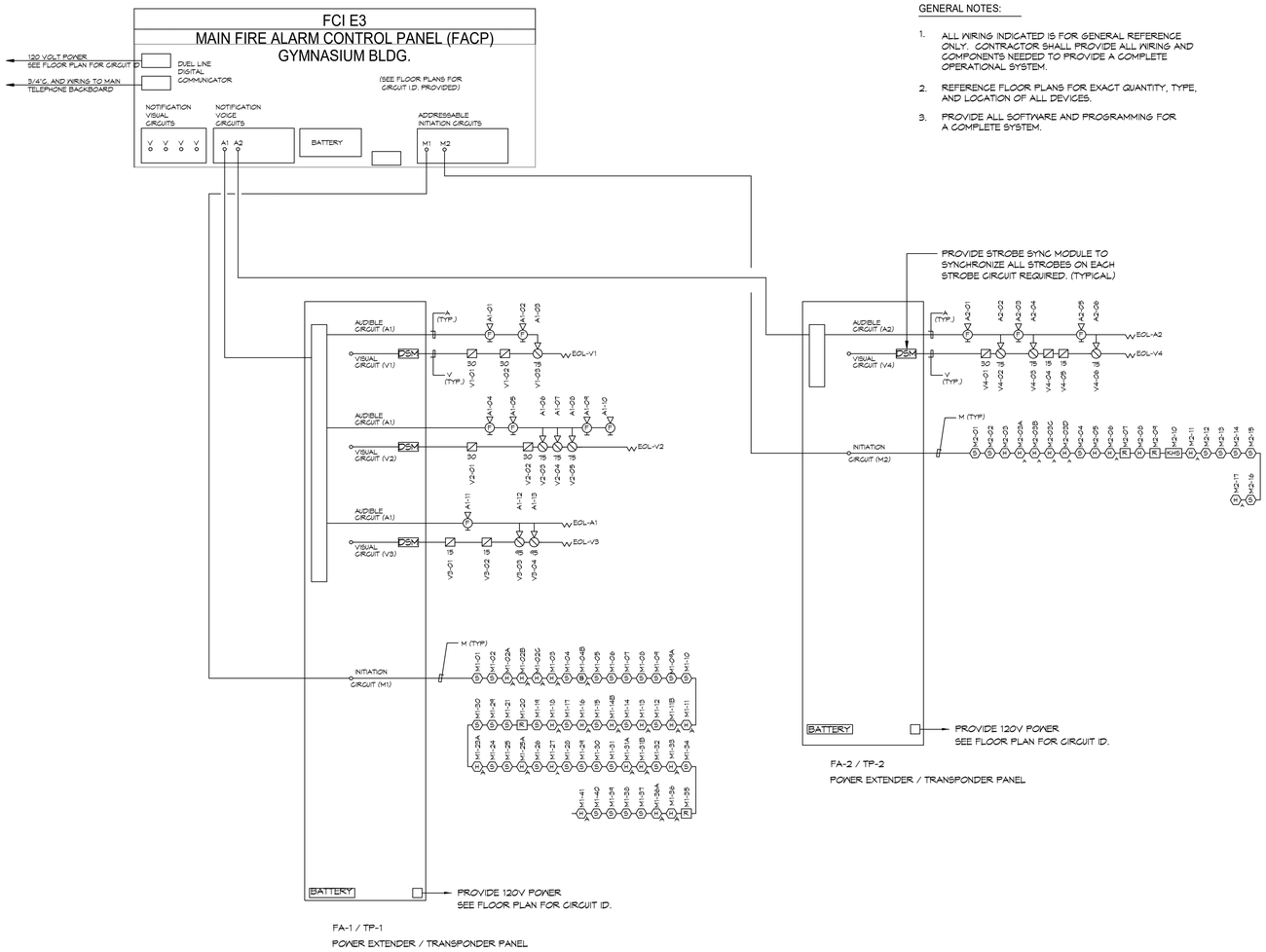

GENERAL NOTES:

1. ALL WIRING INDICATED IS FOR GENERAL REFERENCE ONLY. CONTRACTOR SHALL PROVIDE ALL WIRING AND COMPONENTS NEEDED TO PROVIDE A COMPLETE OPERATIONAL SYSTEM.
2. REFERENCE FLOOR PLANS FOR EXACT QUANTITY, TYPE, AND LOCATION OF ALL DEVICES.
3. PROVIDE ALL SOFTWARE AND PROGRAMMING FOR A COMPLETE SYSTEM.

FIRE ALARM MONITORING NOTE:

1. AUTOMATIC FIRE ALARM SYSTEMS SHALL TRANSMIT THE ALARM, SUPERVISORY AND TROUBLE SIGNALS TO AN APPROVED SUPERVISING STATION AS REQUIRED BY NFPA 72 AS AMENDED BY CFC SECTION 907. THE SUPERVISING STATION SHALL BE LISTED AS EITHER UUFX OR UUJS BY UNDERWRITERS LABORATORY OR SHALL MEET THE REQUIREMENTS OF FACTORY MUTUAL RESEARCH APPROVAL STANDARD 3011, SUPERVISION OF SYSTEM AND LEASED TELEPHONE LINES SHALL BE ARRANGED BY OWNER.

FIRE ALARM GENERAL REQUIREMENTS:

1. THE COMPLETE INSTALLATION SHALL BE REVIEWED AND APPROVED BY THE ABOVE LOCAL MANUFACTURERS REPRESENTATIVE. SEE SPECIFICATIONS (28 30 00), FOR ADDITIONAL CONTRACTOR QUALIFICATIONS AND REQUIREMENTS.
2. UNLESS OTHERWISE NOTED SOLID LINES BETWEEN DEVICES SHALL BE 3/4" E.M.T. ROUTED CONCEALED ABOVE CEILINGS OR IN WALLS. DASHED LINES INDICATE 3/4" P.V.C. UNDERGROUND CONDUIT. ALL WIRING TYPES AND QUANTITES SHOWN ARE FOR INFORMATION ONLY. THE CONTRACTOR SHALL PROVIDE ALL WIRING AS REQUIRED TO MAKE A FULLY OPERATIONAL SYSTEM. SHOP DRAWINGS AND OR AS-BUILT DOCUMENTS SHALL INDICATE ALL WIRING PROVIDED.
3. THE AUDIBILITY OF FIRE ALARM WARNING DEVICES SHALL BE AUDIBLE THROUGH THE OCCUPANCY WITH A MINIMAL SOUND LEVEL 15 db's OVER THE AMBIENT NOISE LEVEL. ADD ADDITIONAL DEVICES AS REQUIRED.
4. UPON COMPLETION OF THE INSTALLATION OF THE FIRE ALARM SYSTEM, A REACCEPTANCE TEST OF THE ENTIRE SYSTEM SHALL BE PERFORMED IN THE PRESENCE OF THE ENFORCING AGENCY AND IN ACCORDANCE WITH SPECIFICATIONS (28 30 00). THE CONTRACTOR SHALL FURNISH db METERS AND ALL OTHER EQUIPMENT TO PERFORM THESE TESTS.
5. ALL CONDUIT PENETRATIONS THROUGH FIRE RATED PARTITIONS SHALL PREVENT THE PASSAGE OF HEAT, SMOKE AND FIRE GASES. ALL PENETRATIONS SHALL COMPLY WITH U.L. ASSEMBLY WL-1169. REFER TO THROUGH-PENETRATION FIRESTOP DETAIL ON THE DETAIL SHEET.
6. ALL OPERATING HARDWARE AT INITIATING DEVICES SHALL NOT REQUIRE TIGHT GRASPING, PINCHING OR TWISTING OF THE WRIST, AND THE FORCE REQUIRED TO OPERATE SHALL BE LESS THAN 5 POUNDS.

APPLICABLE CODES

SEE SHEET T-1 FOR APPLICABLE CODES

APPLICABLE STANDARDS

SEE SHEET T-1 FOR APPLICABLE STANDARDS

WIRING SCHEDULE

DES	CONDUCTOR TYPE	WIRE COLOR	CIRCUIT TYPE
M	(1) 1 PR #14 TWISTED SHIELDED	RED/BLACK/SHIELD	SIGNAL LINE CIRCUIT
A	(2) #12 THHN (UON ON CALCS)	BLUE/WHITE	NOTIFICATION APP. CIRCUIT (NAC)
V	(2) #12 THHN (UON ON CALCS)	GREEN/BLUE	NOTIFICATION APP. CIRCUIT (NAC)
P	(2) #12 THHN	RED/BLACK	POWER

CLEAR SPACE REQUIREMENTS AT
FIRE ALARM PULL STATIONS:

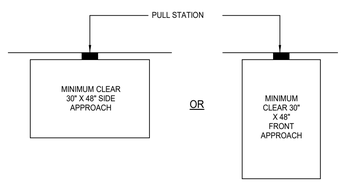

FCI MODEL E3

	SYM	MODEL NO.	DESCRIPTION	C.S.F.M. LISTING	MFG.
001	FACP	FCI-E3	(EXISTING) FIRE ALARM CONTROL PANEL/VOICE EVAC	7165-1703:0125	GAMEWELL FCI
002	FA	GFPS-6	REMOTE POWER SUPPLY	7300-1703:0167	GAMEWELL FCI
003	TP	INX	INTELLIGENT NETWORK TRANSPONDER	7165-1703:0125	GAMEWELL FCI
004	DSM	DSM	DSM SYNC MODULES	7300-0785:0132	COOPER WHEELOCK
006	S	ASD-PL2F	INTELLIGENT SMOKE DETECTOR	7272-1703:0121	GAMEWELL FCI
		B210LP	SENSOR BASE	7300-1653:0109	SYSTEM SENSOR
008	H/A	ATD-RL2F	INTELLIGENT HEAT DETECTOR (ABOVE CEILING)	7270-1703:0115	GAMEWELL FCI
		B210LP	SENSOR BASE	7300-1653:0109	SYSTEM SENSOR
009		ET1010	EXTERIOR SPEAKER W/WBB BACKBOX	7320-0785:0105	COOPER WHEELOCK
010		SPSCRL	SPEAKER/STROBE - CEILING	7320-1653:0505	SYSTEM SENSOR
011		SCRL	STROBE - CEILING	7125-1653:0504	SYSTEM SENSOR
012	M	AMM-2F	ADDRESSABLE MONITOR MODULE	7300-1703:0102	GAMEWELL FCI
013	R	AOM-2RF	ADDRESSABLE RELAY MODULE	7300-1703:0102	GAMEWELL FCI
014	R1	RIC-1	120 VOLT RELAY MODULE	7300-1004:0101	SAE INC
015		TYPE FPL	SIGNAL LINE CIRCUIT CONDUCTORS ('M')	7161-0859:0101	WEST PENN
016		TYPE THHN	AUDIO VISUAL AND POWER CONDUCTORS (AV,P)	N/A	SOUTHWIRE

* IF OTHER MANUFACTURER IS USED IT IS TO BE UL AND CSFM LISTED.

MAXIMUM NUMBER OF CONDUCTORS IN TRADE SIZES OF CONDUIT OR TUBING MINIMUM CONDUIT SIZE FOR THIS PROJECT IS 3/4"

CONDUIT TRADE SIZE (INCHES)		1/2	3/4	1	1 1/4	1 1/2	2	2 1/2	3	3 1/2	4	5
TYPE LETTERS	CONDUCTOR SIZE AWG, kcmil											
THWN	14 12	13 10	24 18	39 29	69 51	94 70	154 114	164				
THHN	10 8	6 3	11 5	18 9	32 16	44 22	73 36	104 51	160 79	106	136	

TRADE SIZE	INTERNAL DIAMETER INCHES	AREA—SQUARE INCHES								
			PERCENT REDUCTION PER NUMBER OF 18AWG TWISTED SHIELD PAIRS							
		100% INCHES	OVER 2 COND. 40%	1	2	3	4	5	6	7	8
1/2	.622	.30	.12	38%	66%	99%	X	X	X	X	X
3/4	.824	.53	.21	19%	38%	57%	76%	95%	X	X	X
1	1.049	.86	.34	12%	24%	36%	48%	60%	72%	84%	96%
1 1/4	1.380	1.50	.60	7%	14%	21%	28%	35%	42%	49%	56%
1 1/2	1.610	2.04	.82	5%	10%	15%	20%	25%	30%	35%	40%
2	2.067	3.36	1.34	3%	6%	9%	12%	15%	18%	21%	24%

ANNUNCIATOR ZONE SCHEDULE

	ROOM SMOKE OR HEAT DETECTORS	MANUAL PULL STATIONS	SPRINKLER SYSTEM	TROUBLE INDICATION
BLDGS	YES	NO	N/A	YES

NOTES:

1. ALL SMOKE DETECTORS, HEAT DETECTORS ABOVE CEILING DETECTORS, DUCT DETECTORS MANUAL PULL STATIONS, FLOW SWITCHES, TAMPER SWITCHES SHALL BE INDIVIDUALLY ADDRESSABLE.
2. PROVIDE (1) REMOTE ANNUNCIATOR IN BUILDING 8 WHICH WILL PROVIDE LED LIGHT INDICATORS TO IDENTIFY THE ABOVE ZONE SCHEDULE (IN ADDITION TO ANNUNCIATOR NOTED IN NOTE # 3).
3. PROVIDE (1) 32 CHARACTER BACK-LIGHTED ALPHA-NUMERIC DISPLAY ANNUNCIATOR WITH KEYPAD FOR OPERATOR CONTROL, PROGRAMMING AND TESTING.

FIRE ALARM SEQUENCE OF OPERATION

ACTION \ DEVICE	MANUAL PULL STATION	SMOKE/HEAT DETECTOR	AC POWER FAILURE
SOUND ALARM TROUGHOUT BLDG.	YES	YES	NO
ACTIVATE RELAY FOR MONITORING	YES	YES	YES
ANNUNCIATE AT PANEL AND ANNUNCIATOR	YES	YES	YES
SOUND TROUBLE BUZZER	ON WIRING FAULT	ON WIRING FAULT	YES
SOUND SPRINKLER BELL	NO	NO	NO
REPORT TO MONITORING STATION	YES	YES	YES
INITIATE SHUTDOWN OF HVAC UNITS	YES	YES	NO
SOUND SUPERVISING BUZZER	N/A	N/A	N/A

#21087
STAMPS
6/21/2022 9:09:16 AM

IDENTIFICATION STAMP
DIV. OF THE STATE ARCHITECT
APP: 04-120895 INC:
REVIEWED FOR
SS ☑ FLS ☑ ACS ☑
DATE: 06/27/2022
ACCESS
FOR INSPECTION

JOHNSON
CONSULTING ENGINEERS, INC.
Power | Lighting | Multimedia
Communications | Data Networking
12875 Brookprinter Place, Suite 300
Poway, CA 92064
P 858.679.4030 | F 858.513.0559
www.jce-inc.com
CONSULTANT BRANDING

RUHNAU
CLARKE
ARCHITECTS

GHS KITCHEN & WEIGHTROOM MOD:

PROJECT No. :1-30-55
6/21/2022 9:09:16 AM

DRAWN BY: CHECKED BY:
ISSUE No.____ DATE____ DESCRIPTION____
REVISION No.____ DATE____ DESCRIPTION____

Main Fire Alarm Control Panel

FACP FCI E3 Battery Calculations

Building 'GYM' (FACP)

Type of Device Or Equipment	Standby Amperage Qty	Current	Total	Alarm Amperage Quantity	Current	Total
Control Panel Devices :						
Master Control Assembly	1	0.0810	0.0810	1	0.1500	0.1500
Communication Module	1	0.2000	0.2000	1	0.2500	0.2500
Voice Gateway	1	0.0003	0.0003	1	0.0003	0.0003
Additional SLC Modules	1	0.0004	0.0004	1	0.0070	0.0070
AMP Card AM-50	4	0.0490	0.1960	4	2.3000	9.2000
Communicator Transmitter	1	0.0180	0.0180	1	0.0180	0.0180
Signal Line Circuit Devices:						
Smoke Detector	39	0.0003	0.0129	39	0.0070	0.2730
Heat Detector	30	0.0002	0.0060	30	0.0000	0.0000
Relay Module	13	0.0003	0.0039	4	0.0003	0.0012
Monitor Module	1	0.0004	0.0004	1	0.0070	0.0070
Remote Annunciator	0	0.0300	0.0000	0	0.0650	0.0000
Beam Detector (REC. & TRANS)	0	0.0040	0.0000	0	0.0150	0.0000
Extender Panel (NAC)	2	0.0880	0.1760	2	0.1950	0.3900
Smoke/CO Detector	0	0.0005	0.000	0	0.035	0.000
Total Standby Amperage			**0.695**	**Total Alarm Amperage**		**10.297**

Standby Time Required

24 Hours x Total Standby Amperage = 24 x 0.695 = 16.677 Amp Hours

Alarm Time Required

.25 (15 Min.) x Total Alarm Amperage = 0.25 x 10.297 = 2.574 Amp Hours

Total Required = **19.251** Amp Hours
x120% = 23.101206
Provide Battery & Minimum Battery Amp Hour Required = **30** Amp Hours

(FA-1)

Remote Extender Panel

Supplementary Notification Appliance Circuit Battery Calculations

Type of Device Or Equipment	Standby Amperage Qty	Current	Total	Alarm Amperage Quantity	Current	Total
Exteior Speaker @ 2 watt tap	3	0.000	0.000	11	0.02857	0.314
Dual Sync Module	3	0.000	0.000	3	0.035	0.105
15cd Wall Speaker/Strobe				0	0.030	0.000
30cd Wall Speaker/Strobe				0	0.040	0.000
75cd Wall Speaker/Strobe				0	0.115	0.000
110cd Wall Speaker/Strobe				0	0.200	0.000
0				0	0.000	0.000
0				0	0.000	0.000
15cd (Ceiling) Speaker/Strobe				0	0.040	0.000
30cd (Ceiling) Speaker/Strobe				0	0.058	0.000
75cd (Ceiling) Speaker/Strobe				4	0.155	0.620
95cd (Ceiling) Speaker/Strobe				2	0.258	0.516
0				0	0.000	0.000
0				0	0.000	0.000
0				0	0.000	0.000
15cd Wall Strobe				0	0.057	0.000
30cd Wall Strobe				0	0.085	0.000
75cd Wall Strobe				0	0.135	0.000
110cd Wall Strobe				0	0.182	0.000
135cd Wall Strobe				0	0.205	0.000
185cd Wall Strobe				0	0.253	0.000
15cd (Ceiling) Strobe				4	0.040	0.160
30cd (Ceiling) Strobe				3	0.058	0.174
75cd (Ceiling) Strobe				0	0.155	0.000
95cd (Ceiling) Strobe				0	0.258	0.000
0				0	0.000	0.000
Speaker only @ 1/4 watt tap				0	0.00357	0.000
Speaker only @ 2 watt tap				0	0.02857	0.000
Total Standby Amperage			**0.000**	**Total Alarm Amperage**		**1.889**

Standby Time Required

24 Hours x Total Standby Amperage = 24 x 0.000 = 0.000 Amp Hours

Alarm Time Required

.25(1 5 Min.) x Total Alarm Amperage = .25 x 1.889 = 0.472 Amp Hours

Total Required = **0.472** Amp Hours
x120% = 0.566781
Provide Battery & Minimum Battery Amp Hour Required = **5** Amp Hours

(FA-2)

Remote Extender Panel

Supplementary Notification Appliance Circuit Battery Calculations

Type of Device Or Equipment	Standby Amperage Qty	Current	Total	Alarm Amperage Quantity	Current	Total
Exteior Speaker @ 2 watt tap	3			3	0.02857	0.086
Dual Sync Module	1	0.000	0.000	1	0.035	0.035
15cd Wall Speaker/Strobe	0			0	0.030	0.000
30cd Wall Speaker/Strobe	0			0	0.040	0.000
75cd Wall Speaker/Strobe	0			0	0.115	0.000
110cd Wall Speaker/Strobe	0			0	0.200	0.000
	0			0	0.000	0.000
	0			0	0.000	0.000
15cd (Ceiling) Speaker/Strobe	0			0	0.040	0.000
30cd (Ceiling) Speaker/Strobe	0			0	0.058	0.000
75cd (Ceiling) Speaker/Strobe	3			3	0.155	0.465
95cd (Ceiling) Speaker/Strobe	0			0	0.258	0.000
	0			0	0.000	0.000
	0			0	0.000	0.000
	0			0	0.000	0.000
15cd Wall Strobe	0			0	0.057	0.000
30cd Wall Strobe	0			0	0.085	0.000
75cd Wall Strobe	0			0	0.135	0.000
110cd Wall Strobe	0			0	0.182	0.000
135cd Wall Strobe	0			0	0.205	0.000
185cd Wall Strobe	0			0	0.253	0.000
15cd (Ceiling) Strobe	2			2	0.040	0.080
30cd (Ceiling) Strobe	1			1	0.058	0.058
75cd (Ceiling) Strobe	0			0	0.155	0.000
95cd (Ceiling) Strobe	0			0	0.258	0.000
0	0			0	0.000	0.000
Speaker only @ 1/4 watt tap	0			0	0.00357	0.000
Speaker only @ 2 watt tap	0			0	0.02857	0.000
Total Standby Amperage			**0.000**	**Total Alarm Amperage**		**0.724**

Standby Time Required

24 Hours x Total Standby Amperage = 24 x 0.000 = 0.000 Amp Hours

Alarm Time Required

.25 (15 Min.) x Total Alarm Amperage = .25x 0.724 = 0.181 Amp Hours

Total Required = **0.181** Amp Hours

Minimum Battery Amp Hour Required = **5** Amp Hours

Fire Alarm Voltage Drop Calculations

Calculation Formula:

Total Current x Feet x 21.6 / Circular Mills (Voltage Drop)

Voltage Drop / 24 Volts x 100 Percent = Percentage Voltage Drop

Circular Mils Using #10 wire =10380
Circular Mils Using #12 wire = 6530
Circular Mils Using #14 wire = 4110
Circular Mils Using #18 wire = 1620

(FA-1)

Device Type	Circuit: V1/A1 Devices	x Current	Total Current	Circuit: V2/A1 Devices	x Current	Total Current	Circuit: V3/A1 Devices	x Current	Total Current	Circuit: 0 Devices	x Current	Total Current
Exteior Speaker @ 2 watt tap	2	0.02857	0.057	4	0.02857	0.114	1	0.02857	0.029	0	0.02857	0.000
Dual Sync Module	1	0.035	0.035	1	0.035	0.035	1	0.035	0.035	0	0.035	0.000
15cd Wall Speaker/Strobe	0	0.030	0.000	0	0.030	0.000	0	0.030	0.000	0	0.030	0.000
30cd Wall Speaker/Strobe	0	0.040	0.000	0	0.040	0.000	0	0.040	0.000	0	0.040	0.000
75cd Wall Speaker/Strobe	0	0.115	0.000	0	0.115	0.000	0	0.115	0.000	0	0.115	0.000
110cd Wall Speaker/Strobe	0	0.200	0.000	0	0.200	0.000	0	0.200	0.000	0	0.200	0.000
	0	0.000	0.000	0	0.000	0.000	0	0.000	0.000	0	0.000	0.000
	0	0.000	0.000	0	0.000	0.000	0	0.000	0.000	0	0.000	0.000
15cd (Ceiling) Speaker/Strobe	0	0.040	0.000	0	0.040	0.000	0	0.040	0.000	0	0.040	0.000
30cd (Ceiling) Speaker/Strobe	0	0.058	0.000	0	0.058	0.000	0	0.058	0.000	0	0.058	0.000
75cd (Ceiling) Speaker/Strobe	1	0.155	0.155	3	0.155	0.465	0	0.155	0.000	0	0.155	0.000
95cd (Ceiling) Speaker/Strobe	0	0.258	0.000	0	0.258	0.000	2	0.258	0.516	0	0.258	0.000
	0	0.000	0.000	0	0.000	0.000	0	0.000	0.000	0	0.000	0.000
	0	0.000	0.000	0	0.000	0.000	0	0.000	0.000	0	0.000	0.000
	0	0.000	0.000	0	0.000	0.000	0	0.000	0.000	0	0.000	0.000
15cd Wall Strobe	0	0.057	0.000	0	0.057	0.000	0	0.057	0.000	0	0.057	0.000
30cd Wall Strobe	0	0.085	0.000	0	0.085	0.000	0	0.085	0.000	0	0.085	0.000
75cd Wall Strobe	0	0.135	0.000	0	0.135	0.000	0	0.135	0.000	0	0.135	0.000
110cd Wall Strobe	0	0.182	0.000	0	0.182	0.000	0	0.182	0.000	0	0.182	0.000
135cd Wall Strobe	0	0.205	0.000	0	0.205	0.000	0	0.205	0.000	0	0.205	0.000
185cd Wall Strobe	0	0.253	0.000	0	0.253	0.000	0	0.253	0.000	0	0.253	0.000
15cd (Ceiling) Strobe	0	0.040	0.000	1	0.040	0.040	2	0.040	0.080	0	0.040	0.000
30cd (Ceiling) Strobe	2	0.058	0.116	1	0.058	0.058	0	0.058	0.000	1	0.058	0.058
75cd (Ceiling) Strobe	0	0.155	0.000	0	0.155	0.000	0	0.155	0.000	1	0.155	0.155
95cd (Ceiling) Strobe	0	0.258	0.000	0	0.258	0.000	0	0.258	0.000	0	0.258	0.000
0	0	0.000	0.000	0	0.000	0.000	0	0.000	0.000	0	0.000	0.000
Speaker only @ 1/4 watt tap	0	0.00357	0.000	0	0.00357	0.000	0	0.00357	0.000	0	0.00357	0.000
Speaker only @ 2 watt tap	0	0.02857	0.000	0	0.02857	0.000	0	0.02857	0.000	0	0.02857	0.000
		Total	0.363		**Total**	0.712		**Total**	0.660		**Total**	0.213
Circuit Length:	200			200			200			0		
Circular mils:	6530			6530			6530			6530		
Volts dropped:	0.24			0.47			0.44			0.00		
Percent voltage drop:	**1.00%**			**1.96%**			**1.82%**			**0.00%**		

(FA-2)

Device Type	Circuit: V4/A2 Devices	x Current	Total Current	Circuit: 0 Devices	x Current	Total Current	Circuit: 0 Devices	x Current	Total Current	Circuit: 0 Devices	x Current	Total Current
Exteior Speaker @ 2 watt tap	3	0.02857	0.086	0	0.02857	0.000	0	0.02857	0.000	0	0.02857	0.000
Dual Sync Module	1	0.035	0.035	0	0.035	0.000	0	0.035	0.000	0	0.035	0.000
15cd Wall Speaker/Strobe	0	0.030	0.000	0	0.030	0.000	0	0.030	0.000	0	0.030	0.000
30cd Wall Speaker/Strobe	0	0.040	0.000	0	0.040	0.000	0	0.040	0.000	0	0.040	0.000
75cd Wall Speaker/Strobe	0	0.115	0.000	0	0.115	0.000	0	0.115	0.000	0	0.115	0.000
110cd Wall Speaker/Strobe	0	0.200	0.000	0	0.200	0.000	0	0.200	0.000	0	0.200	0.000
	0	0.000	0.000	0	0.000	0.000	0	0.000	0.000	0	0.000	0.000
	0	0.000	0.000	0	0.000	0.000	0	0.000	0.000	0	0.000	0.000
15cd (Ceiling) Speaker/Strobe	0	0.040	0.000	0	0.040	0.000	0	0.040	0.000	0	0.040	0.000
30cd (Ceiling) Speaker/Strobe	0	0.058	0.000	0	0.058	0.000	0	0.058	0.000	0	0.058	0.000
75cd (Ceiling) Speaker/Strobe	3	0.155	0.465	0	0.155	0.000	0	0.155	0.000	0	0.155	0.000
95cd (Ceiling) Speaker/Strobe	0	0.258	0.000	0	0.258	0.000	0	0.258	0.000	0	0.258	0.000
	0	0.000	0.000	0	0.000	0.000	0	0.000	0.000	0	0.000	0.000
	0	0.000	0.000	0	0.000	0.000	0	0.000	0.000	0	0.000	0.000
	0	0.000	0.000	0	0.000	0.000	0	0.000	0.000	0	0.000	0.000
15cd Wall Strobe	0	0.057	0.000	0	0.057	0.000	0	0.057	0.000	0	0.057	0.000
30cd Wall Strobe	0	0.085	0.000	0	0.085	0.000	0	0.085	0.000	0	0.085	0.000
75cd Wall Strobe	0	0.135	0.000	0	0.135	0.000	0	0.135	0.000	0	0.135	0.000
110cd Wall Strobe	0	0.182	0.000	0	0.182	0.000	0	0.182	0.000	0	0.182	0.000
135cd Wall Strobe	0	0.205	0.000	0	0.205	0.000	0	0.205	0.000	0	0.205	0.000
185cd Wall Strobe	0	0.253	0.000	0	0.253	0.000	0	0.253	0.000	0	0.253	0.000
15cd (Ceiling) Strobe	2	0.040	0.080	0	0.040	0.000	0	0.040	0.000	0	0.040	0.000
30cd (Ceiling) Strobe	1	0.058	0.058	0	0.058	0.000	0	0.058	0.000	0	0.058	0.000
75cd (Ceiling) Strobe	0	0.155	0.000	0	0.155	0.000	0	0.155	0.000	0	0.155	0.000
95cd (Ceiling) Strobe	0	0.258	0.000	0	0.258	0.000	0	0.258	0.000	0	0.258	0.000
0	0	0.000	0.000	0	0.000	0.000	0	0.000	0.000	0	0.000	0.000
Speaker only @ 1/4 watt tap	0	0.00357	0.000	0	0.00357	0.000	0	0.00357	0.000	0	0.00357	0.000
Speaker only @ 2 watt tap	0	0.02857	0.000	0	0.02857	0.000	0	0.02857	0.000	0	0.02857	0.000
		Total	0.724		**Total**	0.000		**Total**	0.000		**Total**	0.000
Circuit Length:	200			0			0			0		
Circular mils:	4110			4110			4110			4110		
Volts dropped:	0.76			0.00			0.00			0.00		
Percent voltage drop:	**3.17%**			**0.00%**			**0.00%**			**0.00%**		

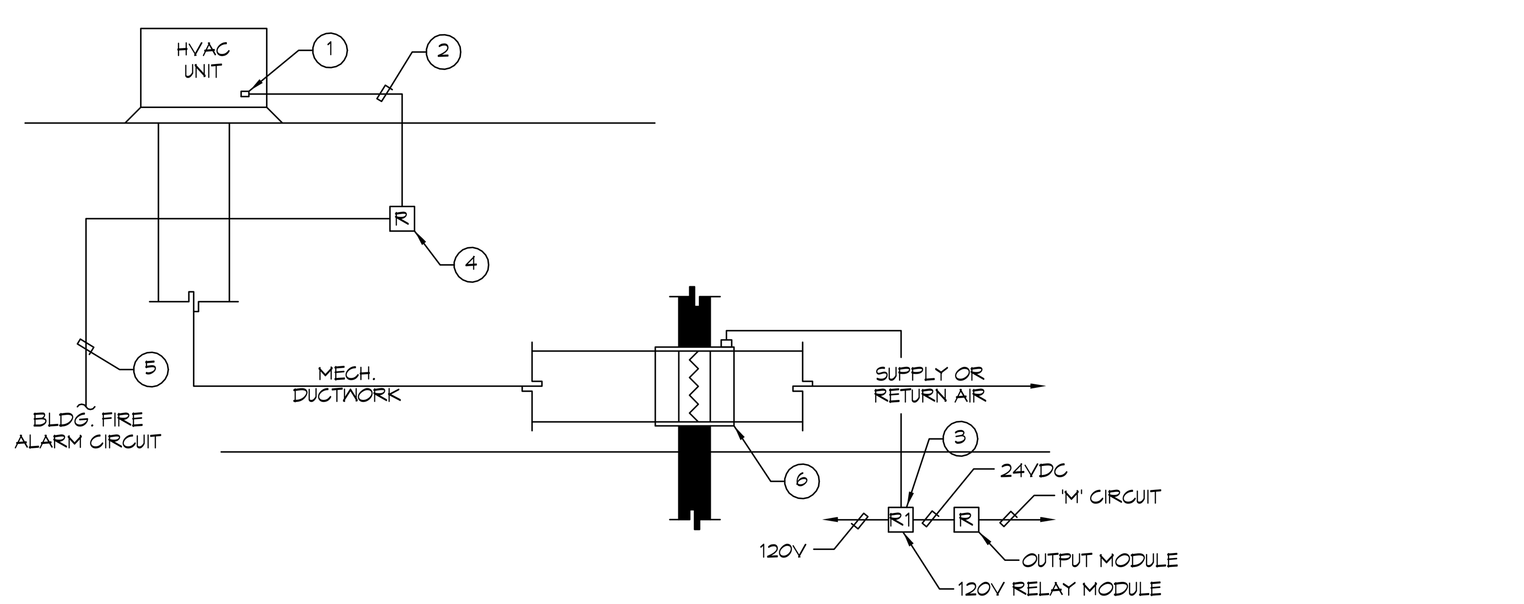

HVAC UNITS ACTIVATED BY FULL COVERAGE SMOKE DETECTION SYSTEM DAMPER CONTROL DIAGRAM

KEY NOTES:

1. ALL A/C UNITS SHALL SHUT DOWN, WHETHER IN HEATING OR COOLING MODE, UPON ACTIVATION OF ANY FIRE ALARM DEVICE IN THE BUILDING INCLUDING SMOKE/HEAT DETECTORS, MANUAL STATIONS, DUCT DETECTORS, AREA DETECTORS, CONTROLLING SMOKE DAMPERS, SPRINKLER ACTIVATION. 45 SECONDS AFTER THE A/C UNITS HAVE BEEN SHUT DOWN, ALL SMOKE DAMPERS SHALL CLOSE.
2. 1/2" CONDUIT PROVIDED BY (ELECTRICAL) WITH CONTROL WIRING PROVIDED BY (FIRE ALARM). FINAL CONNECTIONS TO A/C UNIT BY (MECHANICAL) AND ALL CONNECTIONS AT FIRE ALARM DEVICES BY (FIRE ALARM) CONTRACTOR.
3. FIRE ALARM CONTROL MODULE MOUNTED AT FACP OR FA PANELS, BOXES AND INTERCONNECTING CONDUITS BY (ELECTRICAL) CONTRACTOR. WIRING BY (FIRE ALARM) CONTRACTOR.
4. FIRE ALARM CONTROL MODULE MOUNTED TO J-BOX ADJACENT TO A/C UNIT, BOXES AND INTERCONNECTING CONDUITS BY (ELECTRICAL) CONTRACTOR. WIRING BY (FIRE ALARM) CONTRACTOR.
5. 1/2" CONDUIT PROVIDED BY (ELECTRICAL) WITH CONTROL WIRING PROVIDED BY (FIRE ALARM) CONTRACTOR.
6. SMOKE/FIRE DAMPER BY (MECHANICAL).

DAMPER/HVAC UNIT FIRE ALARM CONTROL DIAGRAM

NO SCALE

1 / E5.4

REGISTERED PROFESSIONAL ENGINEER — NO.E 14781 — Exp. 6-30-2023 — ELECTRICAL — STATE OF CALIFORNIA

LICENSED ARCHITECT — ROGER CLARKE — No. C-21340 — Exp. 10-31-23 — STATE OF CALIFORNIA

#21087
STAMPS
6/21/2022 9:09:17 AM

IDENTIFICATION STAMP
DIV. OF THE STATE ARCHITECT
APP: 04-120895 INC:
REVIEWED FOR
SS ☑ FLS ☑ ACS ☑
DATE: 06/27/2022

JOHNSON CONSULTING ENGINEERS, INC.
Power | Lighting | Multimedia
Communications | Data Networking
12875 Brookprinter Place, Suite 300
Poway, CA 92064
P 858.679.4030 | F 858.513.0559
www.jce-inc.com
CONSULTANT BRANDING

RUHNAU CLARKE ARCHITECTS

PROJECT No. :1-30-55
6/21/2022 9:09:17 AM

DRAWN BY: CHECKED BY:
ISSUE No.______ DATE________ DESCRIPTION________________
ISSUE No.______ DATE________ DESCRIPTION________________
ISSUE No.______ DATE________ DESCRIPTION________________
ISSUE No.______ DATE________ DESCRIPTION________________
REVISION No.______ DATE________ DESCRIPTION________________
REVISION No.______ DATE________ DESCRIPTION________________
REVISION No.______ DATE________ DESCRIPTION________________
REVISION No.______ DATE________ DESCRIPTION________________

RUHNAUCLARKE.COM
3775 TENTH STREET, RIVERSIDE CALIFORNIA 92501 (951) 684 4664 / 5751 PALMER WAY, SUITE C, CARLSBAD CALIFORNIA 92010 (760) 438 5899

GHS KITCHEN & WEIGHTROOM MOD
GROSSMONT HIGH SCHOOL
1100 MURRAY DR, EL CAJON, CA 92020
GROSSMONT UNION HIGH SCHOOL

FIRE ALARM DETAILS AND CALCULATIONS

E5.4

1-30-55

GHS KITCHEN & WEIGHTROOM MOD:

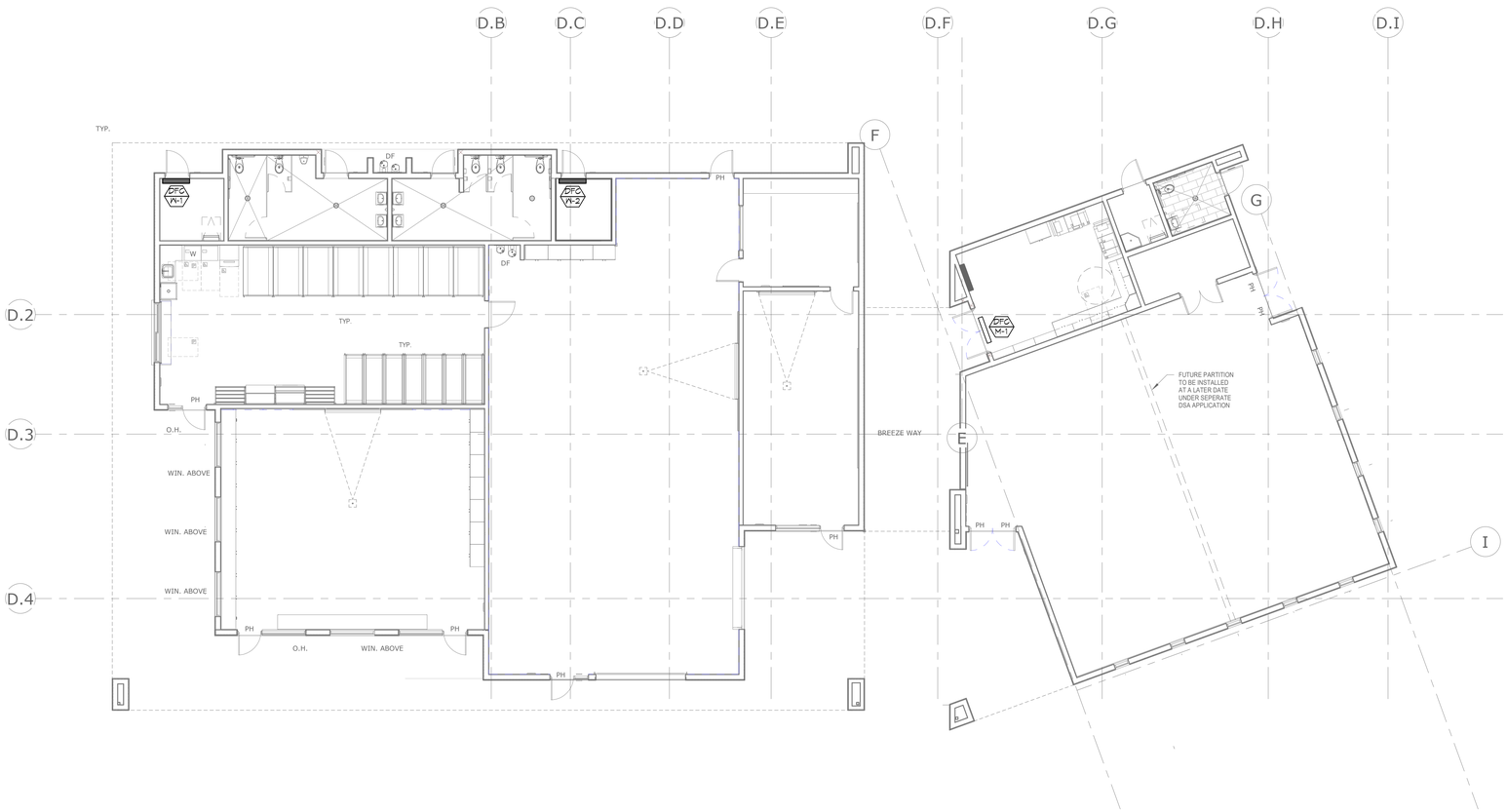

#21087
STAMPS
6/21/2022 9:09:20 AM

IDENTIFICATION STAMP
DIV. OF THE STATE ARCHITECT
APP: 04-120895 INC:
REVIEWED FOR
SS ☑ FLS ☑ ACS ☑
DATE: 06/27/2022

JOHNSON
CONSULTING ENGINEERS, INC.
Power | Lighting | Multimedia
Communications | Data Networking
12875 Brookprinter Place, Suite 300
Poway, CA 92064
P 858.679.4030 | F 858.513.0559
www.jce-inc.com
CONSULTANT BRANDING

RUHNAU
CLARKE
ARCHITECTS

GENERAL NOTES:

1. REFERENCE MECHANICAL PLANS FOR EXACT EQUIPMENT LOCATIONS PRIOR TO ROUGH-IN.
2. DASHED EQUIPMENT INDICATES THAT EQUIPMENT IS LOCATED WITHIN CEILING SPACE. ALL OTHER EQUIPMENT IS ROOF MOUNTED (U.O.N.).
3. ALL CONDUIT FEEDERS TO ROOF MOUNTED EQUIPMENT SHALL BE RUN CONCEALED IN CEILING SPACE WHERE EQUIPMENT CURBS ARE PROVIDED. ROUTE FEEDER UP THROUGH CURB TO EQUIPMENT DISCONNECT.
4. REFERENCE SHEET E6 SERIES MECHANICAL EQUIPMENT SCHEDULE FOR CONDUIT, WIRE AND DISCONNECT REQUIREMENTS.
5. REFERENCE E5. SERIES SHEETS FOR UNITS WHICH REQUIRE DUCT TYPE SMOKE DETECTOR CONNECTIONS.

KEY NOTES:

1. MECHANICAL EQUIPMENT IS LOCATED IN CEILING SPACE. SEE MECHANICAL FOR EXACT LOCATION.
2. PROVIDE SECURITY DOOR CONTACT AT ROOF HATCH AND 3/4"C. TO IDF ROOM.

NORTH

BLDG 900 FLOOR PLAN - MECHANICAL

SCALE: 1/8" = 1'-0"
REF.: /
1

PROJECT No. :1-30-55
6/21/2022 9:09:20 AM

DRAWN BY: CHECKED BY:
ISSUE No.____ DATE____ DESCRIPTION____
ISSUE No.____ DATE____ DESCRIPTION____
ISSUE No.____ DATE____ DESCRIPTION____
ISSUE No.____ DATE____ DESCRIPTION____
REVISION No.____ DATE____ DESCRIPTION____
REVISION No.____ DATE____ DESCRIPTION____
REVISION No.____ DATE____ DESCRIPTION____
REVISION No.____ DATE____ DESCRIPTION____

RUHNAUCLARKE.COM
3775 TENTH STREET, RIVERSIDE CALIFORNIA 92501 (951) 684 4664 / 5751 PALMER WAY, SUITE C, CARLSBAD CALIFORNIA 92010 (60) 438 5899

GHS KITCHEN & WEIGHTROOM MOD
GROSSMONT HIGH SCHOOL
1100 MURRAY DR, EL CAJON, CA 92020
GROSSMONT UNION HIGH SCHOOL

BLDG 900 FLOOR PLAN - MECHANICAL

E6.1

1-30-55

GHS KITCHEN & WEIGHTROOM MOD:

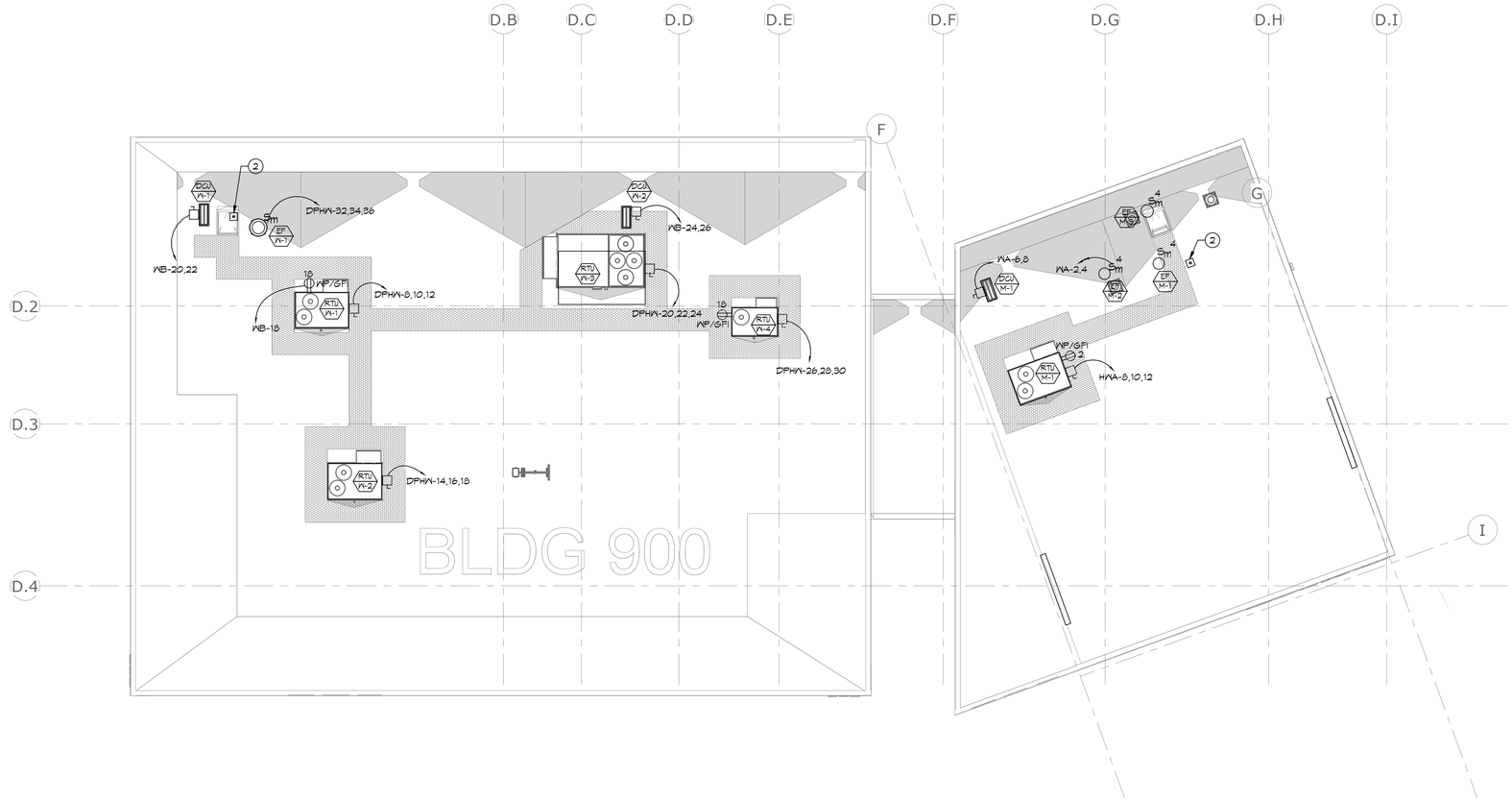

NORTH

BLDG 900 ROOF PLAN | SCALE: 1/8" = 1'-0" | REF.: / | 1

#21087
STAMPS
6/21/2022 9:09:24 AM

IDENTIFICATION STAMP
DIV. OF THE STATE ARCHITECT
APP: 04-120895 INC:
REVIEWED FOR
SS ☑ FLS ☑ ACS ☑
DATE: 06/27/2022

JOHNSON
CONSULTING ENGINEERS, INC.
Power | Lighting | Multimedia
Communications | Data Networking
12875 Brookprinter Place, Suite 300
Poway, CA 92064
P 858.679.4030 | F 858.513.0559
www.jce-inc.com
CONSULTANT BRANDING

RUHNAU
CLARKE
ARCHITECTS

GENERAL NOTES:

1. REFERENCE MECHANICAL PLANS FOR EXACT EQUIPMENT LOCATIONS PRIOR TO ROUGH-IN.
2. DASHED EQUIPMENT INDICATES THAT EQUIPMENT IS LOCATED WITHIN CEILING SPACE. ALL OTHER EQUIPMENT IS ROOF MOUNTED (U.O.N.).
3. ALL CONDUIT FEEDERS TO ROOF MOUNTED EQUIPMENT SHALL BE RUN CONCEALED IN CEILING SPACE WHERE EQUIPMENT CURBS ARE PROVIDED. ROUTE FEEDER UP THROUGH CURB TO EQUIPMENT DISCONNECT.
4. REFERENCE SHEET E6 SERIES MECHANICAL EQUIPMENT SCHEDULE FOR CONDUIT, WIRE AND DISCONNECT REQUIREMENTS.
5. REFERENCE E5. SERIES SHEETS FOR UNITS WHICH REQUIRE DUCT TYPE SMOKE DETECTOR CONNECTIONS.

KEY NOTES:

1. MECHANICAL EQUIPMENT IS LOCATED IN CEILING SPACE. SEE MECHANICAL FOR EXACT LOCATION.
2. PROVIDE SECURITY DOOR CONTACT AT ROOF HATCH AND 3/4"C. TO IDF ROOM.

GHS KITCHEN & WEIGHTROOM MOD:

PROJECT No. :1-30-55
6/21/2022 9:09:24 AM

DRAWN BY: CHECKED BY:

ISSUE No.	DATE	DESCRIPTION	REVISION No.	DATE	DESCRIPTION
ISSUE No.	DATE	DESCRIPTION	REVISION No.	DATE	DESCRIPTION
ISSUE No.	DATE	DESCRIPTION	REVISION No.	DATE	DESCRIPTION
ISSUE No.	DATE	DESCRIPTION	REVISION No.	DATE	DESCRIPTION

RUHNAUCLARKE.COM
3775 TENTH STREET, RIVERSIDE CALIFORNIA 92501 (951) 684 4664 / 5751 PALMER WAY, SUITE C, CARLSBAD CALIFORNIA 92010 (60) 438 5899

GHS KITCHEN & WEIGHTROOM MOD
GROSSMONT HIGH SCHOOL
1100 MURRAY DR, EL CAJON, CA 92020
GROSSMONT UNION HIGH SCHOOL

BLDG 900 ROOF PLAN

E6.2

1-30-55

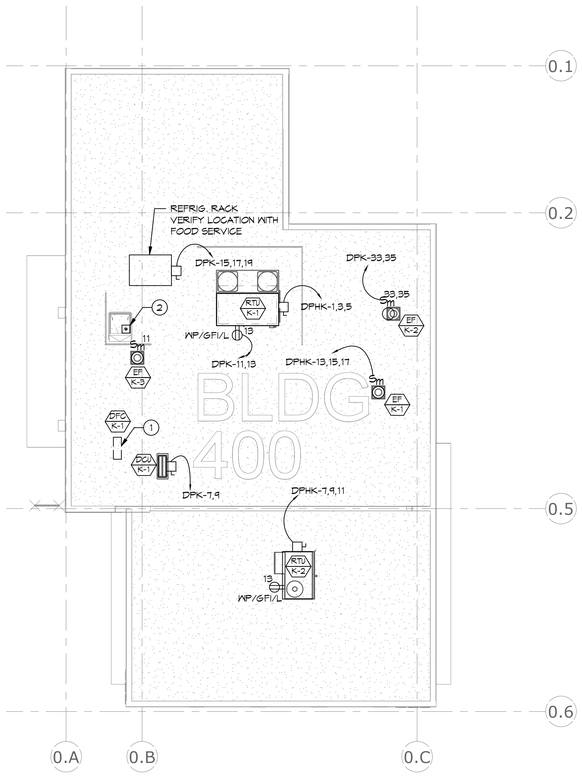

#21087
STAMPS
6/21/2022 9:09:26 AM

IDENTIFICATION STAMP
DIV. OF THE STATE ARCHITECT
APP: 04-120895 INC:
REVIEWED FOR
SS ☑ FLS ☑ ACS ☑
DATE: 06/27/2022

JOHNSON
CONSULTING ENGINEERS, INC.
Power | Lighting | Multimedia
Communications | Data Networking
12875 Brookprinter Place, Suite 300
Poway, CA 92064
P 858.679.4030 | F 858.513.0559
www.jce-inc.com
CONSULTANT BRANDING

RUHNAU
CLARKE
ARCHITECTS

GENERAL NOTES:

1. REFERENCE MECHANICAL PLANS FOR EXACT EQUIPMENT LOCATIONS PRIOR TO ROUGH-IN.
2. DASHED EQUIPMENT INDICATES THAT EQUIPMENT IS LOCATED WITHIN CEILING SPACE. ALL OTHER EQUIPMENT IS ROOF MOUNTED (U.O.N.).
3. ALL CONDUIT FEEDERS TO ROOF MOUNTED EQUIPMENT SHALL BE RUN CONCEALED IN CEILING SPACE WHERE EQUIPMENT CURBS ARE PROVIDED. ROUTE FEEDER UP THROUGH CURB TO EQUIPMENT DISCONNECT.
4. REFERENCE SHEET E6 SERIES MECHANICAL EQUIPMENT SCHEDULE FOR CONDUIT, WIRE AND DISCONNECT REQUIREMENTS.
5. REFERENCE E5. SERIES SHEETS FOR UNITS WHICH REQUIRE DUCT TYPE SMOKE DETECTOR CONNECTIONS.

KEY NOTES:

1. MECHANICAL EQUIPMENT IS LOCATED IN CEILING SPACE. SEE MECHANICAL FOR EXACT LOCATION.
2. PROVIDE SECURITY DOOR CONTACT AT ROOF HATCH AND 3/4"C. TO IDF ROOM.

NORTH

KITCHEN ROOF PLAN SCALE: 1/8" = 1'-0" REF.: / 1

GHS KITCHEN & WEIGHTROOM MOD:

PROJECT No. :1-30-55
6/21/2022 9:09:26 AM

DRAWN BY: CHECKED BY:
ISSUE No.____ DATE____ DESCRIPTION____
ISSUE No.____ DATE____ DESCRIPTION____
ISSUE No.____ DATE____ DESCRIPTION____
ISSUE No.____ DATE____ DESCRIPTION____
REVISION No.____ DATE____ DESCRIPTION____
REVISION No.____ DATE____ DESCRIPTION____
REVISION No.____ DATE____ DESCRIPTION____
REVISION No.____ DATE____ DESCRIPTION____

RUHNAUCLARKE.COM
3775 TENTH STREET, RIVERSIDE CALIFORNIA 92501 (951) 684 4664 / 5751 PALMER WAY, SUITE C, CARLSBAD CALIFORNIA 92010 (60) 438 5899

GHS KITCHEN & WEIGHTROOM MOD
GROSSMONT HIGH SCHOOL
1100 MURRAY DR, EL CAJON, CA 92020
GROSSMONT UNION HIGH SCHOOL

KITCHEN ROOF PLAN

E6.3

1-30-55

MECHANICAL EQUIPMENT SCHEDULE

MARK	VOLTAGE/ PHASE	CONDUIT/ WIRE	FUSE	DISC. SWITCH	PANEL	REMARKS
RTU K-1	480 / 3	1"C, 3 #6 , 1 #8 GND	40	60A/3P/3R	SEE PLANS	33.8 MCA (2) (3)
RTU K-2	480 / 3	1"C, 3 #10 , 1 #10 GND	15	30A/3P/3R	SEE PLANS	11 MCA (2)
RTU M-1	480 / 3	1"C, 3 #6 , 1 #8 GND	25	30A/3P/3R	SEE PLANS	20 MCA (2)
RTU W-1	480 / 3	1"C, 3 #10 , 1 #10 GND	15	30A/3P/3R	SEE PLANS	11 MCA (2)
RTU W-2	480 / 3	1"C, 3 #10 , 1 #10 GND	15	30A/3P/3R	SEE PLANS	11 MCA (2)
RTU W-3	480 / 3	1"C, 3 #10 , 1 #10 GND	30	60A/3P/3R	SEE PLANS	25 MCA (2)
RTU W-4	480 / 3	1"C, 3 #10 , 1 #10 GND	15	30A/3P/3R	SEE PLANS	11 MCA (2)
DCU K-1 / DFO K-1	208 / 1	1"C, 2#10 , 1#10 GND	15	30A/3P/3R	SEE PLANS	9 MCA (1)
DCU W-1 / DFO W-1	208 / 1	1"C, 2#10 , 1#10 GND	15	30A/3P/3R	SEE PLANS	9 MCA (1)
DCU W-2 / DFO W-2	208 / 1	1"C, 2#10 , 1#10 GND	15	30A/3P/3R	SEE PLANS	9 MCA (1)
DCU M-1 / DFO M-1	208 / 1	1"C, 2#10 , 1#10 GND	15	30A/3P/3R	SEE PLANS	9 MCA (1)
EF W-1	480 / 3	1"C, 3 #10 , 1 #10 GND		MAN MTR STRTR	SEE PLANS	1/2 HP (1FLA)
EF M-1	120 / 1	3/4"C, 2#12 , 1#12 GND		MAN MTR STRTR	SEE PLANS	1/8 HP (3.9FLA)
EF M-2	120 / 1	3/4"C, 2#12 , 1#12 GND		MAN MTR STRTR	SEE PLANS	1/8 HP (3.9FLA)
EF M-3	120 / 1	3/4"C, 2#12 , 1#12 GND		MAN MTR STRTR	SEE PLANS	1/8 HP (3.9FLA)
EF K-1	480 / 3	3/4"C, 2#12 , 1#12 GND		MAN MTR STRTR	SEE PLANS	3 HP (4.8FLA) (3)
EF K-2	208 / 1	3/4"C, 2#12 , 1#12 GND		MAN MTR STRTR	SEE PLANS	1/4 HP (5.8FLA)
EF K-3	120 / 1	3/4"C, 2#12 , 1#12 GND		MAN MTR STRTR	SEE PLANS	1/8 HP (3.9FLA) (4)

KEY NOTES:

1. INDOOR UNIT FED FROM OUTDOOR UNIT. PROVIDE CONDUIT AND CONDUCTORS FROM INDOOR UNIT TO OUTDOOR UNIT AS REQUIRED BY MECHANICAL.
2. PROVIDE SEPARATE 30A/3P/3R DISCONNECT FUSED AT 10 AMPS FOR POWER EXHAUST. PROVIDE 3#12,#12GND FROM LINE SIDE OF A/C UNIT DISCONNECT TO FEED POWER EXHAUST.
3. EXHAUST FAN TO BE INTERCONNECTED WITH CAPTIVE MAKE UP AIR UNIT
4. EXHAUST FAN TO BE INTERCONNECTED WITH SWITCH ON WALL

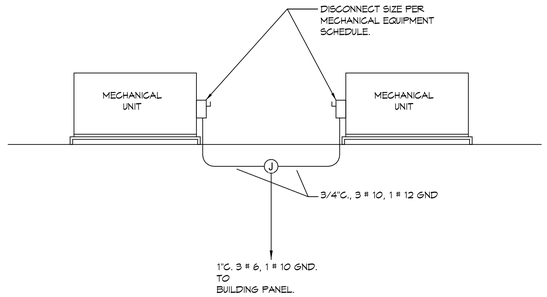

TYPICAL MECHANICAL UNIT COMBINATION FEEDER DETAIL (2 / E6.4)
NO SCALE

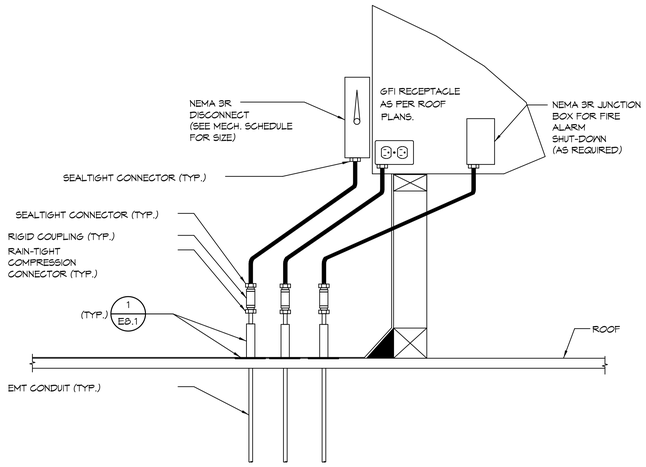

A/C UNIT CONNECTION DETAIL (3 / E6.4)
NO SCALE

#21087
STAMPS
6/21/2022 9:09:27 AM

IDENTIFICATION STAMP
DIV. OF THE STATE ARCHITECT
APP: 04-120895 INC:
REVIEWED FOR
SS ☑ FLS ☑ ACS ☑
DATE: 06/27/2022
FOR CLOSE-OUT ONLY

JOHNSON CONSULTING ENGINEERS, INC.
Power | Lighting | Multimedia
Communications | Data Networking
12875 Brookprinter Place, Suite 300
Poway, CA 92064
P 858.679.4030 | F 858.513.0559
www.jce-inc.com
CONSULTANT BRANDING

RUHNAU CLARKE ARCHITECTS

GHS KITCHEN & WEIGHTROOM MOD:

PROJECT No. :1-30-55
6/21/2022 9:09:27 AM

DRAWN BY: CHECKED BY:
ISSUE No.____ DATE____ DESCRIPTION____
REVISION No.____ DATE____ DESCRIPTION____

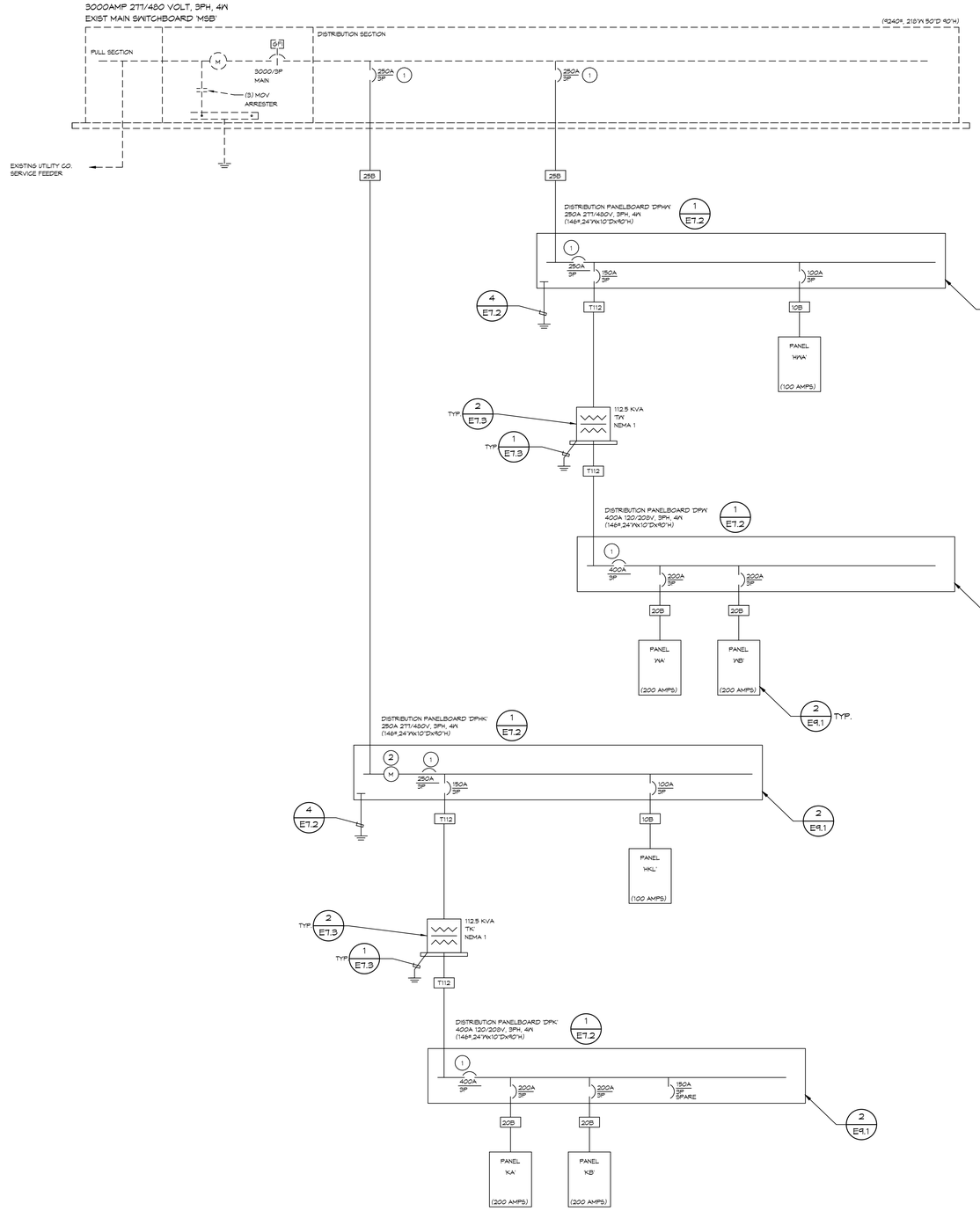

GENERAL NOTES:

1. A FAULT CURRENT AND TIME CURRENT STUDY MUST BE PROVIDED AS DESCRIBED IN THE SPECIFICATIONS PRIOR TO FINAL APPROVAL OF THE POWER EQUIPMENT.
2. REFERENCE DETAIL 3/E7.3 FOR ALL EQUIPMENT FAULT CURRENT RATINGS.
3. UNLESS WHERE OTHERWISE NOTED, ALL WORK INDICATED ON THESE DRAWINGS SHALL BE CONSIDERED NEW WORK.
4. ALL ELECTRICAL GEAR AND EQUIPMENT SHOWN ON ONE-LINE DIAGRAM SHALL BE NEMA 3R UNLESS OTHERWISE NOTED.

KEY NOTES:

1. 100% RATED ELECTRONIC TRIP MAIN.
2. PROVIDE HONEYWELL #E34-480400-R01KIT METER AND CTS TO METER PANEL FOR FOOD SERVICE BUILDING. METER SHALL CONNECT TO BMS.

ELECTRICAL LOAD SUMMARY

		CONNECTED LOAD		DEMAND LOAD (PER N.E.C. 220-34)
BUILDING 'K' (8,000 SQ. FT.)	=	144 AMPS	=	118 AMPS
BUILDING 'W' (8,928 SQ. FT.)	=	215 AMPS	=	173 AMPS
TOTAL LOAD	=	359 AMPS	=	291 AMPS
(178,220 SQ. FT.)	TOTAL			
(17.3 WATTS/SQ. FT.)	CONNECTED			- AMPS TOTAL SERVICE LOAD
(13.8 WATTS/SQ. FT.)	DEMAND			

600V FEEDER SCHEDULE LEGEND

MS — REFERENCE MECHANICAL EQUIPMENT SCHEDULE FOR SIZE

T75 — "T" INDICATES TYPICAL TRANSFORMER FEEDER REFERENCE. THE NUMBER INDICATES TRANSFORMER TYPE. REFER TO SCHEDULE ON SHEET 2/E7.3 FOR SIZE REQUIRED.

2 CO — 2 INDICATES QUANTITY OF CONDUITS REQUIRED = (2)

4 — INDICATES SIZE OF CONDUITS REQUIRED = 4"

CO — INDICATES "CONDUIT ONLY"

600V FEEDER SCHEDULE GENERAL NOTES:

1. ALL CONDUCTOR SHALL BE PROVIDED WITH TYPE THAN-2 INSULATION. REFERENCE SPECIFICATION SECTION 26 05 19 (16120) FOR ADDITIONAL REQUIREMENTS.
2. PROVIDE 60 DEGREE COPPER/ALUMINUM RATED TERMINATION FOR ALL FEEDERS SIZED WITH #2 OR SMALLER CONDUCTORS. PROVIDE 75 DEGREE COPPER/ALUMINUM RATED TERMINATIONS FOR ALL FEEDERS SIZED WITH #1 OR LARGER CONDUCTORS.
3. CONTRACTOR SHALL BE RESPONSIBLE FOR ORDERING LUG CONFIGURATION AN ALL EQUIPMENT, BREAKER OF DISCONNECTS TO MATCH FEEDER CONFIGURATIONS INDICATED.
4. WHERE MULTIPLE CONDUIT QUANTITIES ARE INDICATED, CONDUCTOR QUANTITIES AND SIZES SHOWN IN SCHEDULE SHALL BE PROVIDED IN EACH CONDUIT.

600Volt Feeder Schedule

I.D.	Type	Ampacity	Copper Conduit		Copper Conductors
2A	.	20	(1)	3/4"	3 # 12, 1# 12 Gnd
2B	.	20	(1)	3/4"	4 # 12, 1# 12 Gnd
3A		30	(1)	3/4"	3 # 10, 1# 10 Gnd
3B		30	(1)	3/4"	4 # 10, 1# 10 Gnd
4A		40	(1)	1"	3 # 8, 1# 10 Gnd
4B		40	(1)	1"	4 # 8, 1# 10 Gnd
5A		50	(1)	1"	3 # 6, 1# 10 Gnd
5B		50	(1)	1"	4 # 6, 1# 10 Gnd
6A		60	(1)	1 1/4"	3 # 4, 1# 8 Gnd
6B		60	(1)	1 1/4"	4 # 4, 1# 8 Gnd
7A		70	(1)	1 1/4"	3 # 4, 1# 8 Gnd
7B		70	(1)	1 1/4"	4 # 4, 1# 8 Gnd
8A		80	(1)	1 1/4"	3 # 3, 1# 8 Gnd
8B		80	(1)	1 1/4"	4 # 3, 1# 8 Gnd
9A		90	(1)	1 1/2"	3 # 2, 1# 8 Gnd
9B		90	(1)	1 1/2"	4 # 2, 1# 8 Gnd
10A		100	(1)	1 1/2"	3 # 1, 1# 6 Gnd
10B		100	(1)	1 1/2"	4 # 1, 1# 6 Gnd
12A		125	(1)	2"	3 # 1, 1# 6 Gnd
12B		125	(1)	2"	4 # 1, 1# 6 Gnd
15A		150	(1)	2"	3 # 1/0, 1# 6 Gnd
15B		150	(1)	2"	4 # 1/0, 1# 6 Gnd
17A		175	(1)	2"	3 # 2/0, 1# 6 Gnd
17B		175	(1)	2"	4 # 2/0, 1# 6 Gnd
20A		200	(1)	3"	3 # 3/0, 1# 4 Gnd
20B		200	(1)	3"	4 # 3/0, 1# 4 Gnd
22A		225	(1)	3"	3 # 4/0, 1# 4 Gnd
22B		225	(1)	3"	4 # 4/0, 1# 4 Gnd
25A		250	(1)	3"	3 # 250, 1# 4 Gnd
25B		250	(1)	3"	4 # 250, 1# 4 Gnd
30A		300	(1)	3"	3 # 350, 1# 4 Gnd
30B		300	(1)	3"	4 # 350, 1# 4 Gnd
35A		350	(2)	2"	3 # 2/0, 1# 2 Gnd
35B		350	(2)	2"	4 # 2/0, 1# 2 Gnd
40A		400	(2)	3"	3 # 3/0, 1# 2 Gnd
40B		400	(2)	3"	4 # 3/0, 1# 2 Gnd
45A		450	(2)	3"	3 # 4/0, 1# 2 Gnd
45B		450	(2)	3"	4 # 4/0, 1# 2 Gnd
50A		500	(2)	2-1/2"	3 # 250, 1# 2 Gnd
50B		500	(2)	2-1/2"	4 # 250, 1# 2 Gnd
60A		600	(2)	3"	3 # 350, 1# 1 Gnd
60B		600	(2)	3"	4 # 350, 1# 1 Gnd
70A		700	(3)	3"	3 # 4/0, 1# 1/0 Gnd
70B		700	(3)	3"	4 # 4/0, 1# 1/0 Gnd
80A		800	(3)	3"	3 # 300, 1# 1/0 Gnd
80B		800	(3)	3"	4 # 300, 1# 1/0 Gnd
100B		1000	(4)	3"	4 # 250, 1# 2/0 Gnd
120B		1200	(4)	4"	4 # 350, 1# 3/0 Gnd
160B		1600	(5)	4"	4 # 400, 1# 4/0 Gnd
200B		2000	(6)	4"	4 # 500, 1# 250 Gnd
250B		2500	(7)	4"	4 # 500, 1# 350 Gnd
300B		3000	(8)	4"	4 # 500, 1# 350 Gnd
350B		3500	(12)	4"	4 # 350, 1# 400 Gnd
400B		4000	(12)	4"	4 # 400, 1# 400 Gnd

#21087
STAMPS
6/21/2022 9:09:29 AM

IDENTIFICATION STAMP
DIV. OF THE STATE ARCHITECT
APP: 04-120895 INC:
REVIEWED FOR
SS ☑ FLS ☑ ACS ☑
DATE: 06/27/2022
ACCESSIBILITY
FOR REVIEW

JOHNSON CONSULTING ENGINEERS, INC.
Power | Lighting | Multimedia
Communications | Data Networking
12875 Brookprinter Place, Suite 300
Poway, CA 92064
P 858.679.4030 | F 858.513.0559
www.jce-inc.com
CONSULTANT BRANDING

RUHNAU CLARKE ARCHITECTS

GHS KITCHEN & WEIGHTROOM MOD:

PROJECT No. :1-30-55
6/21/2022 9:09:29 AM

DRAWN BY: CHECKED BY:

ISSUE No.____ DATE____ DESCRIPTION____
REVISION No.____ DATE____ DESCRIPTION____

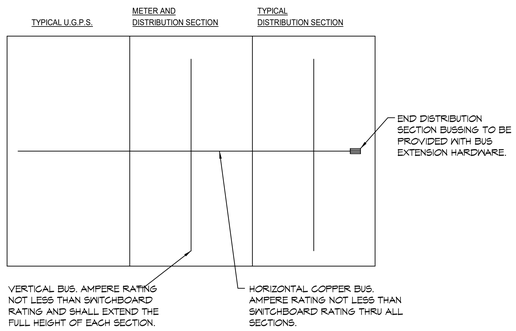

SWITCHBOARD BUS CONFIGURATION DETAIL

NO SCALE

1 / E7.2

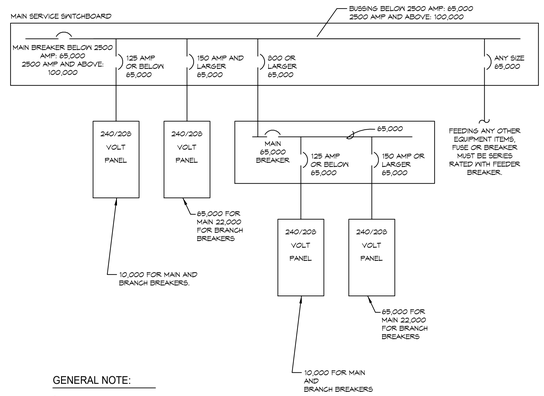

GENERAL NOTE:

1. ALL RATINGS SHOWN ARE FOR A UL LISTED SERIES COMBINATION OF THE BREAKERS INDICATED.

TYPICAL 208/240 VOLT SERVICE AIC EQUIPMENT RATING

NO SCALE

2 / E7.2

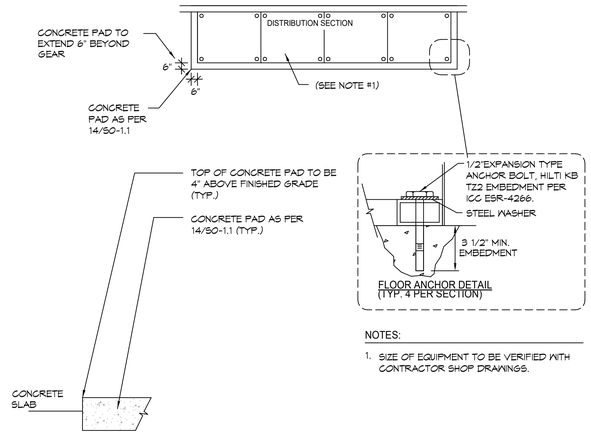

NOTES:

1. SIZE OF EQUIPMENT TO BE VERIFIED WITH CONTRACTOR SHOP DRAWINGS.

TYPICAL ELECTRICAL EQUIPMENT PAD DETAIL

NO SCALE

3 / E7.2

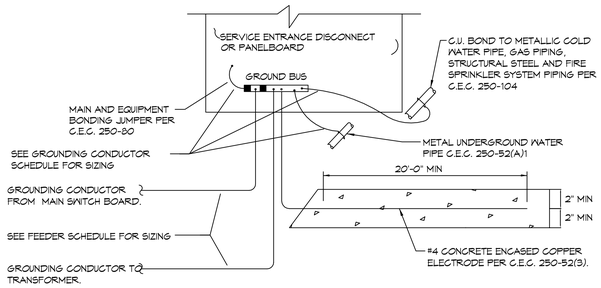

GROUND SIZING SCHEDULE	
EQUIPMENT AMPACITY	GROUNDING CONDUCTOR SIZE
0 - 200 AMPS	#4 CU.
201 - 400 AMPS	#1/0 CU.
401 - 800 AMPS	#2/0 CU.
801 - 1200 AMPS	#3/0 CU.
1201 - 2000 AMPS	#250 CU.
2001 - 4000 AMPS	#350 CU.

SERVICE ENTRANCE GROUNDING AND BONDING DETAIL

NO SCALE

4 / E7.2

#21087
STAMPS
6/21/2022 9:09:30 AM

IDENTIFICATION STAMP
DIV. OF THE STATE ARCHITECT
APP: 04-120895 INC:
REVIEWED FOR
SS ☑ FLS ☑ ACS ☑
DATE: 06/27/2022
AS NOTED
FOR TRACKING PURPOSES ONLY

JOHNSON CONSULTING ENGINEERS, INC.
Power | Lighting | Multimedia
Communications | Data Networking
12875 Brookprinter Place, Suite 300
Poway, CA 92064
P 858.679.4030 | F 858.513.0559
www.jce-inc.com
CONSULTANT BRANDING

RUHNAU CLARKE ARCHITECTS

PROJECT No. :1-30-55
6/21/2022 9:09:30 AM

DRAWN BY: CHECKED BY:
ISSUE No.____ DATE____ DESCRIPTION____
ISSUE No.____ DATE____ DESCRIPTION____
ISSUE No.____ DATE____ DESCRIPTION____
ISSUE No.____ DATE____ DESCRIPTION____
REVISION No.____ DATE____ DESCRIPTION____
REVISION No.____ DATE____ DESCRIPTION____
REVISION No.____ DATE____ DESCRIPTION____
REVISION No.____ DATE____ DESCRIPTION____

RUHNAUCLARKE.COM
3775 TENTH STREET, RIVERSIDE CALIFORNIA 92501 (951) 684 4664 / 5751 PALMER WAY, SUITE C, CARLSBAD CALIFORNIA 92010 (760) 438 5899

GHS KITCHEN & WEIGHTROOM MOD
GROSSMONT HIGH SCHOOL
1100 MURRAY DR, EL CAJON, CA 92020
GROSSMONT UNION HIGH SCHOOL

ONE-LINE DETAILS

E7.2

1-30-55

GHS KITCHEN & WEIGHTROOM MOD:

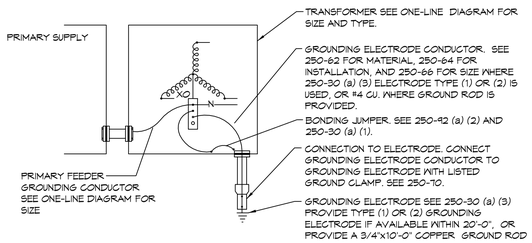

THREE PHASE TRANSFORMER GROUNDING

NO SCALE

1 / E7.3

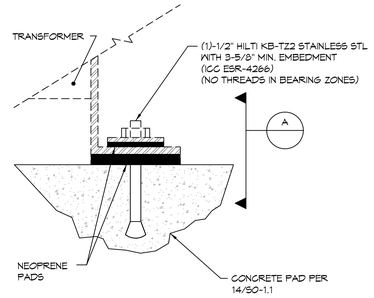

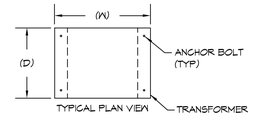

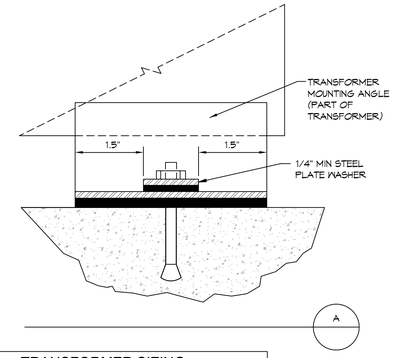

TRANSFORMER SIZING

	WIDTH (W)	DEPTH (D)	HEIGHT	WEIGTH
112.5 KVA	35"	30"	46"	805 LBS.
150 KVA	38"	30"	56"	1045 LBS.

TRANSFORMER ANCHORAGE DETAIL

NO SCALE

2 / E7.3

SINGLE PHASE TRANSFORMER FEEDER SCHEDULE

ID	RATING	CONDUCTOR	PRIMARY	SECONDARY

THREE PHASE TRANSFORMER FEEDER SCHEDULE

ID	RATING	CONDUCTOR	PRIMARY	SECONDARY
T112	112 1/2 KVA	COPPER	(1) 2"C. 3 #2/0, 1 #4 GND	(2) 3"C. 4 #3/0, 1 #2 GND
		ALUMINUM	(1) 2"C. 3 #4/0, 1 #2 GND	(2) 3"C. 4 #250, 1 #1/0 GND
T150	150 KVA	COPPER	(1) 3"C. 3 #4/0, 1 #4 GND	(2) 3"C. 4 #350, 1 #1 GND
		ALUMINUM	(1) 3"C. 3 #300, 1 #2 GND	(2) 3"C. 4 #500, 1 #2/0 GND

GENERAL NOTE:

1. ALL RATINGS SHOWN ARE FOR A UL LISTED SERIES COMBINATION OF THE BREAKERS INDICATED.

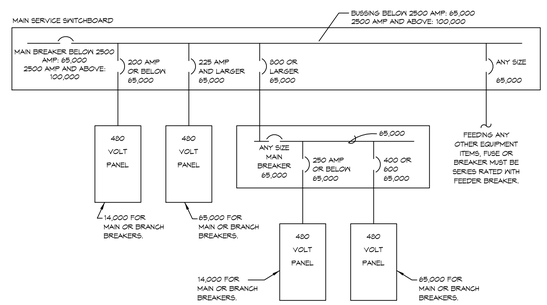

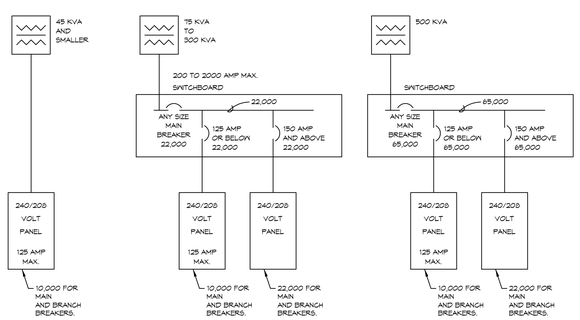

TYPICAL 480 VOLT SERVICE AIC EQUIPMENT RATINGS

NO SCALE

3 / E7.3

#21087
STAMPS
6/21/2022 9:09:32 AM

IDENTIFICATION STAMP
DIV. OF THE STATE ARCHITECT
APP: 04-120895 INC:
REVIEWED FOR
SS ☑ FLS ☑ ACS ☑
DATE: 06/27/2022

JOHNSON CONSULTING ENGINEERS, INC.
Power | Lighting | Multimedia
Communications | Data Networking
12875 Brookprinter Place, Suite 300
Poway, CA 92064
P 858.679.4030 | F 858.513.0559
www.jce-inc.com
CONSULTANT BRANDING

RUHNAU CLARKE ARCHITECTS

GHS KITCHEN & WEIGHTROOM MOD:

PROJECT No. :1-30-55
6/21/2022 9:09:32 AM

DRAWN BY: CHECKED BY:

ISSUE No.____	DATE_____	DESCRIPTION_____	REVISION No.____	DATE_____	DESCRIPTION_____
ISSUE No.____	DATE_____	DESCRIPTION_____	REVISION No.____	DATE_____	DESCRIPTION_____
ISSUE No.____	DATE_____	DESCRIPTION_____	REVISION No.____	DATE_____	DESCRIPTION_____
ISSUE No.____	DATE_____	DESCRIPTION_____	REVISION No.____	DATE_____	DESCRIPTION_____

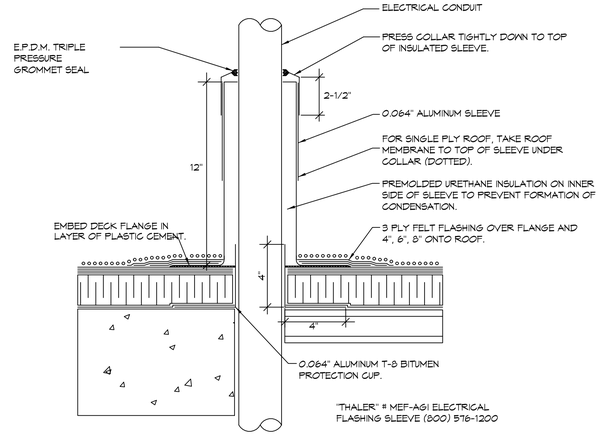

CONDUIT ROOF PENETRATION DETAIL

NO SCALE

1 / E8.1

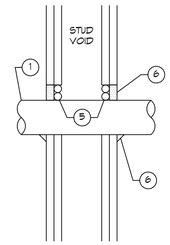

1-2 HOUR STUD WALL U.L. SYSTEM #A-L-1169

KEY NOTES:

1. MAXIMUM 4" EMT CONDUIT.
2. COMPRESSED MINERAL WOOL MIN. 2" THICK (RECESSED TO ALLOW FOR SEALANT).
3. APPLY #FS900 MIN. 1" DEEP AND FLUSH WITH FINISHED SURFACE.
4. 'U' SHAPED STEEL WIRE FOR SUPPORT.
5. BACKER ROD COMPRESSED INTO ANNULUS (LEAVE ROOM FOR SEALANT)
6. APPLY #FS1900 INTO ANNULAR SPACE MIN. 5/8" DEEP. ADD 3/8" BEAD AT POINT OF CONTACT.

GENERAL NOTES:

1. ALL CONDUIT PENETRATION THRU FIRE RATED PARTITIONS SHALL COMPLY WITH THESE DETAILS. SEE ARCHITECTURAL PLANS FOR LOCATION OF ALL RATED PARTITIONS.
2. FOR FIRE STOPPING MATERIALS CONTACT W.R. GRACE (800) 334-8796.

CONDUIT PENETRATION THRU FIRE RATED PARTITIONS

NO SCALE

2 / E8.1

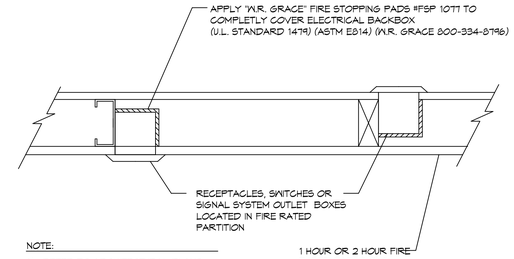

NOTE:

1) REFER TO ARCHITECTURAL PLANS FOR LOCATION OF ALL RATED PARTITIONS.

OUTLET BOX IN FIRE RATED PARTITION

NO SCALE

3 / E8.1

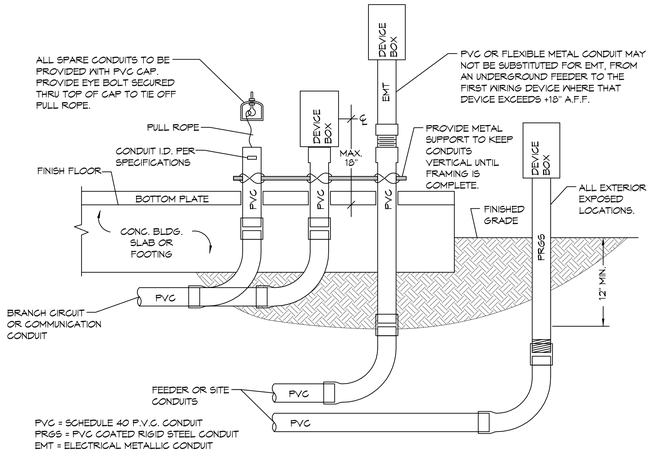

TYPICAL CONDUIT DETAIL

NO SCALE

4 / E8.1

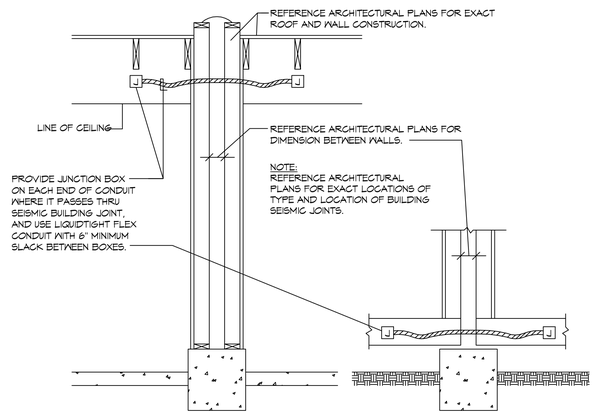

SEISMIC JOINT CONDUIT INSTALLATION DETAIL

NO SCALE

5 / E8.1

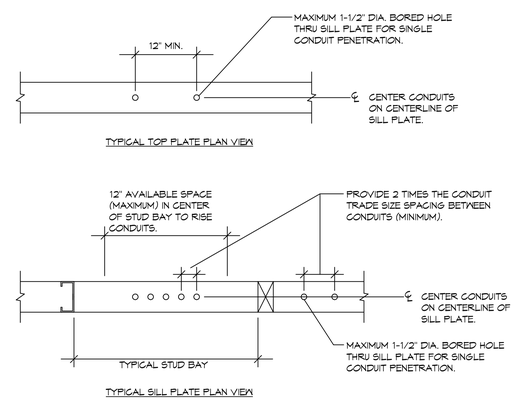

CONDUIT PENETRATIONS THRU PLATE DETAIL

NO SCALE

6 / E8.1

#21087
STAMPS
6/21/2022 9:09:34 AM

IDENTIFICATION STAMP
DIV. OF THE STATE ARCHITECT
APP: 04-120895 INC:
REVIEWED FOR
SS ☑ FLS ☑ ACS ☑
DATE: 06/27/2022
FOR REVIEW

JOHNSON
CONSULTING ENGINEERS, INC.
Power | Lighting | Multimedia
Communications | Data Networking
12875 Brookprinter Place, Suite 300
Poway, CA 92064
P 858.679.4030 | F 858.513.0559
www.jce-inc.com
CONSULTANT BRANDING

RUHNAU CLARKE ARCHITECTS

GHS KITCHEN & WEIGHTROOM MOD:

PROJECT No. :1-30-55
6/21/2022 9:09:34 AM

DRAWN BY: CHECKED BY:

ISSUE No.____ DATE____ DESCRIPTION____
ISSUE No.____ DATE____ DESCRIPTION____
ISSUE No.____ DATE____ DESCRIPTION____
ISSUE No.____ DATE____ DESCRIPTION____

REVISION No.____ DATE____ DESCRIPTION____
REVISION No.____ DATE____ DESCRIPTION____
REVISION No.____ DATE____ DESCRIPTION____
REVISION No.____ DATE____ DESCRIPTION____

RUHNAUCLARKE.COM
3775 TENTH STREET, RIVERSIDE CALIFORNIA 92501 (951) 684 4664 / 5751 PALMER WAY, SUITE C, CARLSBAD CALIFORNIA 92010 (760) 438 5899

GHS KITCHEN & WEIGHTROOM MOD
GROSSMONT HIGH SCHOOL
1100 MURRAY DR, EL CAJON, CA 92020
GROSSMONT UNION HIGH SCHOOL

ELECTRICAL DETAILS

E8.1

1-30-55

DPHK

277/480 | 277/480 3PH, 4WIRE | 200% Neutral Bus | (INTEGRAL)TVSS Protection | (REMOTE)TVSS Protection | Service Entrance Rated X | Load Side Feed thru Lugs

250 AMP — Main: Breaker X, Lug — Enclosure: Recessed, Surface X

ENCLOSURE TYPE: X NEMA TYPE 1 / NEMA TYPE 3R / NEMA TYPE 4X — ENCLOSURE NOTE

GENERAL DISTRIBUTION BREAKER REQUIREMENTS : PROVIDE LOCK ON BREAKER DEVICES FOR ALL EMERGENCY LIGHTING, MOTORS, AND FIRE ALARM EQUIPMENT SERVED FROM THIS PANEL

LCL	NHL	CIRCUIT DESCRIPTION	AMP	POLE	NO	PHASE A	PHASE B	PHASE C	NO	AMP	POLE	CIRCUIT DESCRIPTION	LCL	NHL
		RTU K-1	50	3	1	9362.6			2	20	1	SPARE		
		"	-	-	3		9362.6		4	20	1	SPARE		
		"	-	-	5			9362.6	6	20	1	SPARE		
		RTU K-2	20	3	7	3047			8	20	1	SPARE		
		"	-	-	9		3047		10	20	1	SPARE		
		"	-	-	11			3047	12	20	1	SPARE		
		EF K-1	20	3	13	3821			14	20	1	SPACE		
		"	-	-	15		3821		16	20	1	SPACE		
		"	-	-	17			3821	18	20	1	SPACE		
		ANSUL SYSTEM	20	3	19				20	20	1	SPACE		
		"	-	-	21				22	20	1	SPACE		
		"	-	-	23				24	20	1	SPACE		
		SPACE	20	1	25				26	20	1	SPACE		
		SPACE	20	1	27				28	20	1	SPACE		
		SPACE	20	1	29				30	20	1	SPACE		
		SPACE	20	1	31				32	20	1	PANEL 'HKL'		
		SPACE	20	1	33				34	20	1	"		
		SPACE	20	1	35				36	20	1	"		
		SPACE	20	1	37	18380			38	20	1	XFMR 'TK'		
		SPACE	20	1	39		18360		40	20	1	"		
		SPACE	20	1	41			17460	42	20	1	"		

SPECIAL PANEL NOTE — NOTE #1 — NOTE #2

NHL= Non Harmonic Load; LCL= Long Continuous Load

	PHASE A	PHASE B	PHASE C
TOTAL LOAD PER PHASE	34611	34591	33691
25% LONG CONTINUOUS LOADS	0	0	0
TOTAL CONNECTED LOAD	34611	34590.6	33691

HIGH PHASE 34610.6 / 0.9pf = VA @ 277V 138.8 AMPS
ALL PHASES 102892 / 0.9pf = VA @ 480V/3PH 137.7 AMPS
SUB PANEL / SUB PANEL — DEMAND FER — CEC 220-86 — AMPS
Max. Neut. Load 212 AMPS

M:\Panel Schedule\2021\21087 Grossmont HS Kitchen & Weight room\DPHK 3:11 PM6/9/2022

DPHW

277/480 | 277/480 3PH, 4WIRE | 200% Neutral Bus | (INTEGRAL)TVSS Protection | (REMOTE)TVSS Protection | Service Entrance Rated X | Load Side Feed thru Lugs

250 AMP — Main: Breaker X, Lug — Enclosure: Recessed, Surface X

ENCLOSURE TYPE: X NEMA TYPE 1 / NEMA TYPE 3R / NEMA TYPE 4X — ENCLOSURE NOTE

GENERAL DISTRIBUTION BREAKER REQUIREMENTS : PROVIDE LOCK ON BREAKER DEVICES FOR ALL EMERGENCY LIGHTING, MOTORS, AND FIRE ALARM EQUIPMENT SERVED FROM THIS PANEL

LCL	NHL	CIRCUIT DESCRIPTION	AMP	POLE	NO	PHASE A	PHASE B	PHASE C	NO	AMP	POLE	CIRCUIT DESCRIPTION	LCL	NHL
X		Lighting	20	1	1	1250 / 360			2	20	1	Exterior Lighting	X	
X		Lighting	20	1	3		800 / 404		4	20	1	Exterior Lighting	X	
X		Lighting	20	1	5			600 / 1900	6	20	1	LTG INVERTER 'INVW'		
		SPARE	20	1	7	3047			8	20	3	RTU W-1		X
		SPARE	20	1	9		3047		10	-	-	"		X
		SPARE	20	1	11			3047	12	-	-	"		X
		SPARE	20	1	13	3047			14	20	3	RTU W-2		X
		SPARE	20	1	15		3047		16	-	-	"		X
		SPARE	20	1	17			3047	18	-	-	"		X
		SPARE	20	1	19	6925			20	40	3	RTU W-3		X
		SPARE	20	1	21		6925		22	-	-	"		X
		SPARE	20	1	23			6925	24	-	-	"		X
		SPACE	20	1	25	3047			26	20	3	RTU W-4		X
		SPACE	20	1	27		3047		28	-	-	"		X
		SPACE	20	1	29			3047	30	-	-	"		X
		PANEL 'HWA'	100	3	31	3821			32	20	3	EF W-1		X
		"	-	-	33		3821		34	20	1	"		X
		"	-	-	35			3821	36	20	1	"		X
		XFMR 'TW'	150	3	37				38	20	1	SPACE		
		"	-	-	39				40	20	1	SPACE		
		"	-	-	41				42	20	1	SPACE		

SPECIAL PANEL NOTE — NOTE #1 — NOTE #2

NHL= Non Harmonic Load; LCL= Long Continuous Load

	PHASE A	PHASE B	PHASE C
TOTAL LOAD PER PHASE	21497	21091	22387
25% LONG CONTINUOUS LOADS	403	301	150
TOTAL CONNECTED LOAD	21900	21392	22537

HIGH PHASE 22537 / 0.9pf = VA @ 277V 90.4 AMPS
ALL PHASES 65828.5 / 0.9pf = VA @ 480V/3PH 88.1 AMPS
SUB PANEL / SUB PANEL — DEMAND FER — CEC 220-86 — AMPS
Max. Neut. Load 15 AMPS

M:\Panel Schedule\2021\21087 Grossmont HS Kitchen & Weight room\DPHW 3:11 PM6/9/2022

DPK

120/208 | 120/208 3PH, 4WIRE | 200% Neutral Bus | (INTEGRAL)TVSS Protection X | (REMOTE)TVSS Protection | Service Entrance Rated | Load Side Feed thru Lugs

400 AMP — Main: Breaker X, Lug — Enclosure: Recessed, Surface X

ENCLOSURE TYPE: X NEMA TYPE 1 / NEMA TYPE 3R / NEMA TYPE 4X — ENCLOSURE NOTE

GENERAL DISTRIBUTION BREAKER REQUIREMENTS : PROVIDE LOCK ON BREAKER DEVICES FOR ALL EMERGENCY LIGHTING, MOTORS, AND FIRE ALARM EQUIPMENT SERVED FROM THIS PANEL

LCL	NHL	CIRCUIT DESCRIPTION	AMP	POLE	NO	PHASE A	PHASE B	PHASE C	NO	AMP	POLE	CIRCUIT DESCRIPTION	LCL	NHL
	X	DISHWASHER	60	3	1	6300			2	20	1	SPARE		
	X	"	-	-	3		6300		4	20	1	SPARE		
	X	"	-	-	5			6300	6	20	1	SPARE		
	X	DCU K-1/DFC K-1	30	2	7	1080			8	20	1	SPARE		
	X	"	-	-	9		1080		10	20	1	SPARE		
	X	EF K-3	20	1	11			180	12	20	1	SPARE		
	X	ROOF RECEPTACLES	20	1	13	200			14	20	1			
		REFRIG. RACK	40	3	15		3600		16	20	1	SPACE		
		"	-	-	17			3600	18	20	1	SPACE		
		"	-	-	19	3600			20	20	1	SPACE		
		MOBILE COOK & HOLD	50	3	21		3600		22	20	1	SPACE		
		"	-	-	23			3600	24	20	1	SPACE		
		"	-	-	25	3600			26	100	3	PANEL 'PB'		
		MOBILE COOK & HOLD	50	3	27		3600		28	-	-	"		
		"	-	-	29			3600	30	-	-	"		
		"	-	-	31	3600			32	200	3	PANEL 'KA'		
		EF K-2	20	2	33		180		34	-	-	"		
		"	-	-	35			180	36	-	-	"		
		SPACE	20	1	37				38	200	3	PANEL 'KB'		
		SPACE	20	1	39				40	-	-	"		
		SPACE	20	1	41				42	-	-	"		

SPECIAL PANEL NOTE — NOTE #1 — NOTE #2

NHL= Non Harmonic Load; LCL= Long Continuous Load

	PHASE A	PHASE B	PHASE C
TOTAL LOAD PER PHASE	18380	18360	17460
25% LONG CONTINUOUS LOADS	0	0	0
TOTAL CONNECTED LOAD	18380	18360	17460

HIGH PHASE 18380 / 0.9pf = VA @ 120V 170.2 AMPS
ALL PHASES 54200 / 0.9pf = VA @ 208V/3PH 167.3 AMPS
SUB PANEL / SUB PANEL — DEMAND FER X — CEC 220-86 — 125 AMPS
Max. Neut. Load 156 AMPS

M:\Panel Schedule\2021\21087 Grossmont HS Kitchen & Weight room\DPK 3:12 PM6/9/2022

DPW

120/208 | 120/208 3PH, 4WIRE | 200% Neutral Bus | (INTEGRAL)TVSS Protection X | (REMOTE)TVSS Protection | Service Entrance Rated | Load Side Feed thru Lugs

400 AMP — Main: Breaker X, Lug — Enclosure: Recessed, Surface X

ENCLOSURE TYPE: X NEMA TYPE 1 / NEMA TYPE 3R / NEMA TYPE 4X — ENCLOSURE NOTE

GENERAL DISTRIBUTION BREAKER REQUIREMENTS : PROVIDE LOCK ON BREAKER DEVICES FOR ALL EMERGENCY LIGHTING, MOTORS, AND FIRE ALARM EQUIPMENT SERVED FROM THIS PANEL

LCL	NHL	CIRCUIT DESCRIPTION	AMP	POLE	NO	PHASE A	PHASE B	PHASE C	NO	AMP	POLE	CIRCUIT DESCRIPTION	LCL	NHL
		SPARE	20	1	1				2	20	1	SPARE		
		SPARE	20	1	3				4	20	1	SPARE		
		SPARE	20	1	5				6	20	1	SPARE		
		SPARE	20	1	7				8	20	1	SPARE		
		SPARE	20	1	9				10	20	1	SPARE		
		SPARE	20	1	11				12	20	1	SPARE		
		SPACE	20	1	13				14	20	1	SPACE		
		SPACE	20	1	15				16	20	1	SPACE		
		SPACE	20	1	17				18	20	1	SPACE		
		SPACE	20	1	19				20	20	1	SPACE		
		SPACE	20	1	21				22	20	1	SPACE		
		SPACE	20	1	23				24	20	1	SPACE		
		SPACE	20	1	25				26	20	1	SPACE		
		SPACE	20	1	27				28	20	1	SPACE		
		SPACE	20	1	29				30	20	1	SPACE		
		SPACE	20	1	31				32	200	3	PANEL 'WA'		
		SPACE	20	1	33				34	-	-	"		
		SPACE	20	1	35				36	-	-	"		
		SPACE	20	1	37				38	200	3	PANEL 'WB'		
		SPACE	20	1	39				40	-	-	"		
		SPACE	20	1	41				42	-	-	"		

SPECIAL PANEL NOTE — NOTE #1 — NOTE #2

NHL= Non Harmonic Load; LCL= Long Continuous Load

	PHASE A	PHASE B	PHASE C
TOTAL LOAD PER PHASE	0	0	0
25% LONG CONTINUOUS LOADS	0	0	0
TOTAL CONNECTED LOAD	0	0	0

HIGH PHASE 0 / 0.9pf = VA @ 120V 0.0 AMPS
ALL PHASES 0 / 0.9pf = VA @ 208V/3PH 0.0 AMPS
SUB PANEL / SUB PANEL — DEMAND FER — CEC 220-86 — AMPS
Max. Neut. Load 0 AMPS

M:\Panel Schedule\2021\21087 Grossmont HS Kitchen & Weight room\DPW 3:12 PM6/9/2022

HKL

277/480 | 277/480 3PH, 4WIRE | 200% Neutral Bus | (INTEGRAL)TVSS Protection | (REMOTE)TVSS Protection | Service Entrance Rated | Load Side Feed thru Lugs

100 AMP — Main: Breaker, Lug — Enclosure: Recessed, Surface X

ENCLOSURE TYPE: X NEMA TYPE 1 / NEMA TYPE 3R / NEMA TYPE 4X — ENCLOSURE NOTE

GENERAL DISTRIBUTION BREAKER REQUIREMENTS : PROVIDE LOCK ON BREAKER DEVICES FOR ALL EMERGENCY LIGHTING, MOTORS, AND FIRE ALARM EQUIPMENT SERVED FROM THIS PANEL

LCL	NHL	CIRCUIT DESCRIPTION	AMP	POLE	NO	PHASE A	PHASE B	PHASE C	NO	AMP	POLE	CIRCUIT DESCRIPTION	LCL	NHL
		LTG INVERTER INVK	20	1	1	750 / 300			2	20	1	EXTERIOR LIGHTING		
		LIGHTING	20	1	3		600 / 400		4	20	1	EXTERIOR LIGHTING		
		LIGHTING	20	1	5			900 / 570	6	20	1	SITE LIGHTING		
		LIGHTING	20	1	7	800 / 350			8	20	1	TICKET BOOTH LTG		
		SPARE	20	1	9				10	20	1	SPARE		
		SPARE	20	1	11				12	20	1	SPARE		
		SPARE	20	1	13				14	20	1	SPARE		
		SPARE	20	1	15				16	20	1	SPARE		
		SPARE	20	1	17				18	20	1	SPARE		
		SPARE	20	1	19				20	20	1	SPARE		
		SPACE	20	1	21				22	20	1	SPACE		
		SPACE	20	1	23				24	20	1	SPACE		
		SPACE	20	1	25				26	20	1	SPACE		
		SPACE	20	1	27				28	20	1	SPACE		
		SPACE	20	1	29				30	20	1	SPACE		
		SPACE	20	1	31				32	20	1	SPACE		
		SPACE	20	1	33				34	20	1	SPACE		
		SPACE	20	1	35				36	20	1	SPACE		
		SPACE	20	1	37				38	20	1	SPACE		
		SPACE	20	1	39				40	20	1	SPACE		
		SPACE	20	1	41				42	20	1	SPACE		

SPECIAL PANEL NOTE — NOTE #1 — NOTE #2

NHL= Non Harmonic Load; LCL= Long Continuous Load

	PHASE A	PHASE B	PHASE C
TOTAL LOAD PER PHASE	2200	1000	1470
25% LONG CONTINUOUS LOADS	0	0	0
TOTAL CONNECTED LOAD	2200	1000	1470

HIGH PHASE 2200 / 0.9pf = VA @ 277V 8.8 AMPS
ALL PHASES 4670 / 0.9pf = VA @ 480V/3PH 6.3 AMPS
SUB PANEL / SUB PANEL — DEMAND FER — CEC 220-86 — AMPS
Max. Neut. Load 14 AMPS

M:\Panel Schedule\2021\21087 Grossmont HS Kitchen & Weight room\HKL 3:12 PM6/9/2022

HWA

277/480 | 277/480 3PH, 4WIRE | 200% Neutral Bus | (INTEGRAL)TVSS Protection | (REMOTE)TVSS Protection | Service Entrance Rated X | Load Side Feed thru Lugs

100 AMP — Main: Breaker X, Lug — Enclosure: Recessed, Surface X

ENCLOSURE TYPE: X NEMA TYPE 1 / NEMA TYPE 3R / NEMA TYPE 4X — ENCLOSURE NOTE

GENERAL DISTRIBUTION BREAKER REQUIREMENTS : PROVIDE LOCK ON BREAKER DEVICES FOR ALL EMERGENCY LIGHTING, MOTORS, AND FIRE ALARM EQUIPMENT SERVED FROM THIS PANEL

LCL	NHL	CIRCUIT DESCRIPTION	AMP	POLE	NO	PHASE A	PHASE B	PHASE C	NO	AMP	POLE	CIRCUIT DESCRIPTION	LCL	NHL
X		EXTERIOR LIGHTING	20	1	1	400 / 600			2	20	1	LIGHTING	X	
X		EXTERIOR LIGHTING	20	1	3		400 / 600		4	20	1	LIGHTING	X	
		SPARE	20	1	5				6	20	1	SPARE		
		SPARE	20	1	7	5540			8	30	3	RTU M-1		X
		SPARE	20	1	9		5540		10	-	-	"		X
		SPARE	20	1	11			5540	12	-	-	"		X
		SPARE	20	1	13				14	20	1	SPACE		
		SPARE	20	1	15				16	20	1	SPACE		
		SPARE	20	1	17				18	20	1	SPACE		
		SPARE	20	1	19				20	20	1	SPACE		
		SPARE	20	1	21				22	20	1	SPACE		
		SPARE	20	1	23				24	20	1	SPACE		
		SPACE	20	1	25				26	20	1	SPACE		
		SPACE	20	1	27				28	20	1	SPACE		
		SPACE	20	1	29				30	20	1	SPACE		
		SPACE	20	1	31				32	20	1	SPACE		
		SPACE	20	1	33				34	20	1	SPACE		
		SPACE	20	1	35				36	20	1	SPACE		
		SPACE	20	1	37				38	20	1	SPACE		
		SPACE	20	1	39				40	20	1	SPACE		
		SPACE	20	1	41				42	20	1	SPACE		

SPECIAL PANEL NOTE — NOTE #1 — NOTE #2

NHL= Non Harmonic Load; LCL= Long Continuous Load

	PHASE A	PHASE B	PHASE C
TOTAL LOAD PER PHASE	6540	6540	5540
25% LONG CONTINUOUS LOADS	250	250	0
TOTAL CONNECTED LOAD	6790	6790	5540

HIGH PHASE 6790 / 0.9pf = VA @ 277V 27.2 AMPS
ALL PHASES 19120 / 0.9pf = VA @ 480V/3PH 25.6 AMPS
SUB PANEL / SUB PANEL — DEMAND FER — CEC 220-86 — AMPS
Max. Neut. Load 6 AMPS

M:\Panel Schedule\2021\21087 Grossmont HS Kitchen & Weight room\HWA 3:12 PM6/9/2022

KA

120/208 | 120/208 3PH, 4WIRE | 200% Neutral Bus | (INTEGRAL)TVSS Protection X | (REMOTE)TVSS Protection | Service Entrance Rated | Load Side Feed thru Lugs

200 AMP — Main: Breaker, Lug X — Enclosure: Recessed, Surface X

ENCLOSURE TYPE: X NEMA TYPE 1 / NEMA TYPE 3R / NEMA TYPE 4X — ENCLOSURE NOTE

GENERAL DISTRIBUTION BREAKER REQUIREMENTS : PROVIDE LOCK ON BREAKER DEVICES FOR ALL EMERGENCY LIGHTING, MOTORS, AND FIRE ALARM EQUIPMENT SERVED FROM THIS PANEL

LCL	NHL	CIRCUIT DESCRIPTION	AMP	POLE	NO	PHASE A	PHASE B	PHASE C	NO	AMP	POLE	CIRCUIT DESCRIPTION	LCL	NHL
		FZR EVAP. COIL	20	3	1	1644 / 1920			2	20	1	WARMING CABINET		
		"	-	-	3		1644 / 1020		4	20	1	REFRIGERATOR		
		"	-	-	5			1644 / 1920	6	20	1	WARMING CABINET		
		FZR CLR LTG, CLR COIL	20	1	7	696 / 1020			8	20	1	REFRIGERATOR		
		ICE MACHINES	20	1	9		1272 / 1260		10	20	1	POS, SERVING CART		
		FAUCET	20	1	11			200 / 1260	12	20	1	POS, SERVING CART		
		RECEPTACLES	20	1	13	400 / 1260			14	20	1	POS, SERVING CART		
		TLT SKILLET, GAS RANGE	20	1	15		1008 / 1320		16	20	1	COLD SERVING CARTS		
		CONV. OVEN GAS	20	1	17			960 / 660	18	20	1	COLD SERVING CART		
		CONV. OVEN GAS	20	1	19	960 / 2760			20	30	1	HOT SERVING CART		
		CONV. OVEN GAS	20	1	21		960 / 2760		22	30	1	HOT SERVING CART		
		CONV. OVEN GAS	20	1	23			960 / 2760	24	30	1	HOT SERVING CART		
		RANGE LIGHTS	20	1	25	600 / 680			26	20	1	RECEPT., MILK COOLER		
		GAS SHUTOFF	20	1	27		240 / 680		28	20	1	RECEPT., MILK COOLER		
		HOT CABINET	20	1	29			1440 / 680	30	20	1	RECEPT., MILK COOLER		
		MICROWAVE	20	1	31	1608			32	20	1	SPARE		
		HOT CABINET	20	1	33		1440		34	20	1	SPARE		
		MICROWAVE	20	1	35			1608	36	20	1	SPARE		
		RECEPTACLES	20	1	37	400			38	20	1	SPARE		
		HOT CABINET	20	1	39		1440		40	20	1	SPARE		
		SPARE	20	1	41				42	20	1	SPARE		

SPECIAL PANEL NOTE — NOTE #1 — NOTE #2

NHL= Non Harmonic Load; LCL= Long Continuous Load

	PHASE A	PHASE B	PHASE C
TOTAL LOAD PER PHASE	13948	15044	14092
25% LONG CONTINUOUS LOADS	0	0	0
TOTAL CONNECTED LOAD	13948	15044	14092

HIGH PHASE 15044 / 0.9pf = VA @ 120V 139.3 AMPS
ALL PHASES 43084 / 0.9pf = VA @ 208V/3PH 133.0 AMPS
SUB PANEL / SUB PANEL — DEMAND FER — CEC 220-86 — AMPS
Max. Neut. Load 213 AMPS

M:\Panel Schedule\2021\21087 Grossmont HS Kitchen & Weight room\KA 3:13 PM6/9/2022

#21087
STAMPS 6/21/2022 9:09:35 AM

IDENTIFICATION STAMP
DIV. OF THE STATE ARCHITECT
APP: 04-120895 INC:
REVIEWED FOR
SS ☑ FLS ☑ ACS ☑
DATE: 06/27/2022

JOHNSON CONSULTING ENGINEERS, INC.
Power | Lighting | Multimedia
Communications | Data Networking
12875 Brookprinter Place, Suite 300
Poway, CA 92064
P 858.679.4030 | F 858.513.0559
www.jce-inc.com
CONSULTANT BRANDING

RUHNAU CLARKE ARCHITECTS

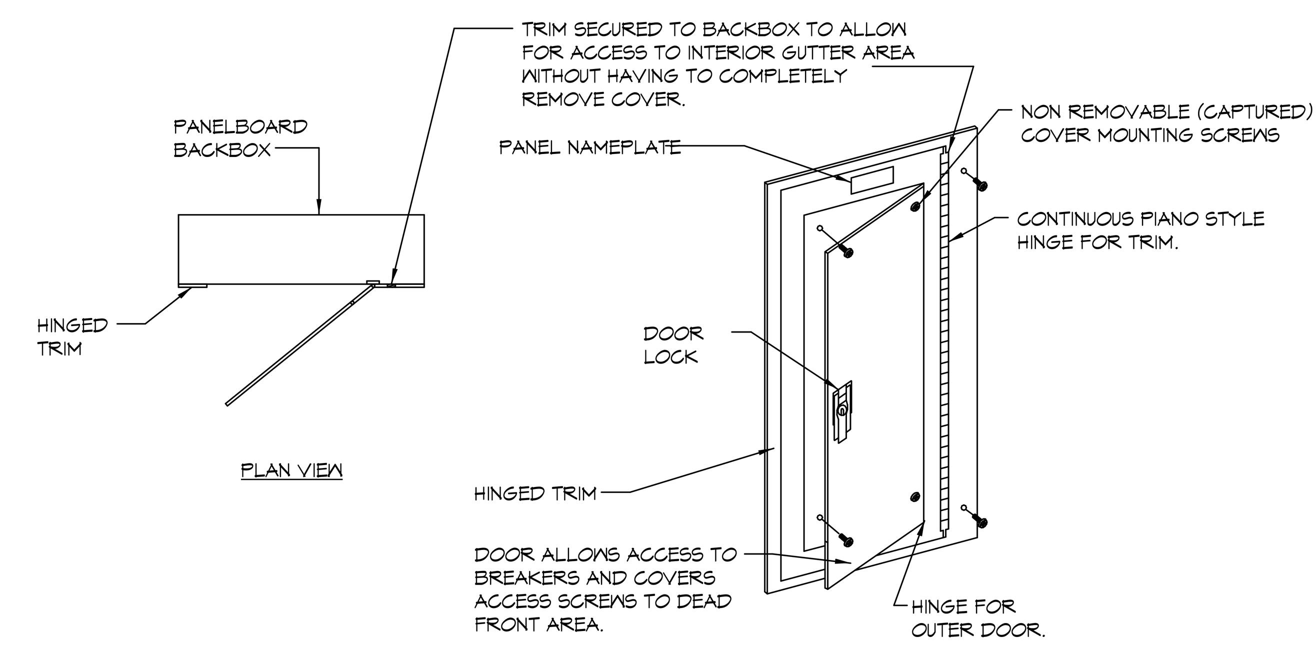

DETAIL GENERAL NOTES

1. PROVIDE FOR ALL PANELBOARDS FOR THIS PROJECT - SURFACE, RECESSED NEMA 1, OR NEMA 3R CONFIGURATION.
2. SEE REFERENCE ONE LINE DIAGRAM FOR ALL PANELBOARD AIC RATINGS.

TYPICAL PANELBOARD DOOR/TRIM DETAIL
NO SCALE — 1 / E9.1

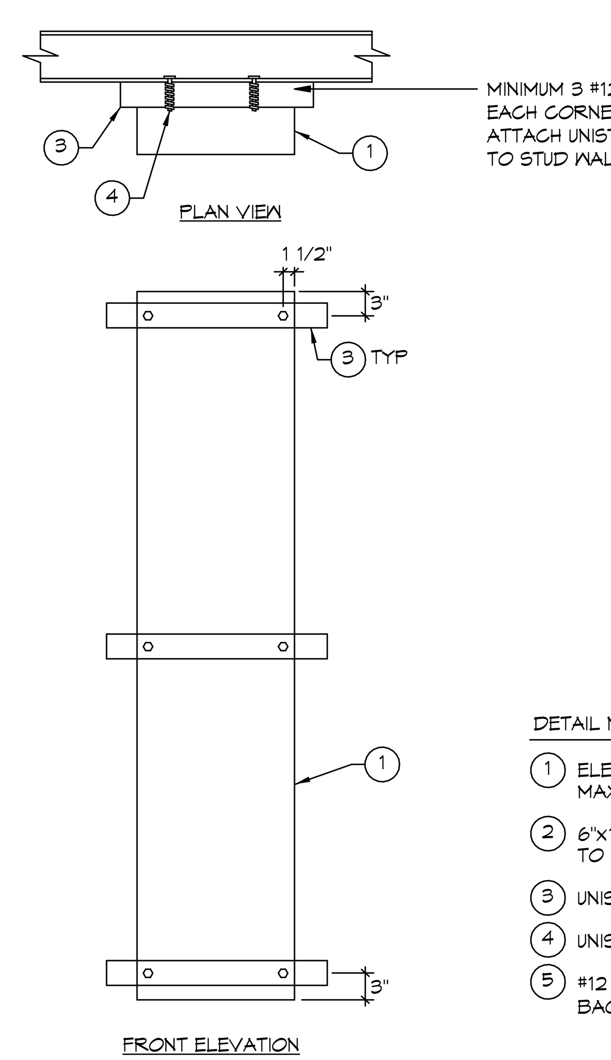

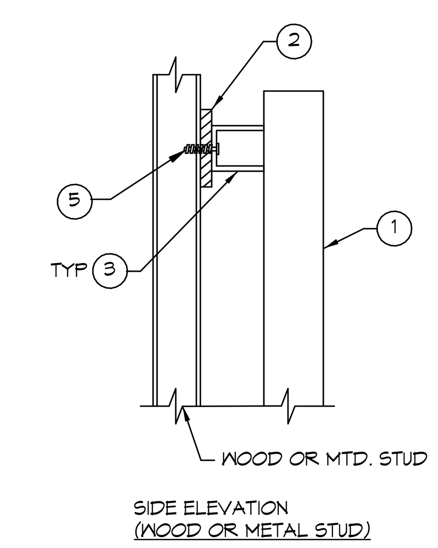

DETAIL NOTES

1. ELECTRICAL PANEL WALL MOUNTED 90" H. X 20" W. X 6" D. MAXIMUM. 150 LBS MAXIMUM WEIGHT.
2. 6"X16GA (54 MILS) NOTCHED TRACK ANCHOR BACKING TO (3) STUDS MIN. WITH MIN. (3) #12 SMS
3. UNISTRUT P1000 C-CHANNEL.
4. UNISTRUT P2380 ANCHOR TO ATTACH PANEL TO UNISTRUT.
5. #12 SMS. @ 6" O.C. TO BACKING TO ATTACH UNISTRUT TO BACKING. MIN. (3) PER EACH UNISTRUT.

SURFACE WALL MOUNTED ELECTRICAL PANEL DETAIL
NO SCALE — 2 / E9.1

DPHK	DPHW	DPK
DPW	HKL	
HWA	KA	

PROJECT No. :1-30-55
6/21/2022 9:09:35 AM

DRAWN BY: CHECKED BY:
ISSUE No.___ DATE___ DESCRIPTION___ (×4)
REVISION No.___ DATE___ DESCRIPTION___ (×4)

RUHNAUCLARKE.COM
3775 TENTH STREET, RIVERSIDE CALIFORNIA 92501 (951) 684 4664 / 5751 PALMER WAY, SUITE C, CARLSBAD CALIFORNIA 92010 (760) 438 5899

GHS KITCHEN & WEIGHTROOM MOD
GROSSMONT HIGH SCHOOL
1100 MURRAY DR, EL CAJON, CA 92020
GROSSMONT UNION HIGH SCHOOL

PANEL SCHEDULES

E9.1

1-30-55

GHS KITCHEN & WEIGHTROOM MOD:

PANEL KB

120/208 ▼ | 120/208 3PH, 4WIRE | 200 AMP | Main: Breaker / Lug X | Enclosure: Recessed / Surface X | ENCLOSURE TYPE: X NEMA TYPE 1, NEMA TYPE 3R, NEMA TYPE 4X | ENCLOSURE NOTE

200% Neutral Bus
(INTEGRAL)TVSS Protection X
(REMOTE)TVSS Protection
Service Entrance Rated
Load Side Feed thru Lugs

GENERAL DISTRIBUTION BREAKER REQUIREMENTS : PROVIDE LOCK ON BREAKER DEVICES FOR ALL EMERGENCY LIGHTING, MOTORS, AND FIRE ALARM EQUIPMENT SERVED FROM THIS PANEL

LCL	NHL	CIRCUIT DESCRIPTION	AMP	POLE	NO	PHASE A	PHASE B	PHASE C	NO	AMP	POLE	CIRCUIT DESCRIPTION	LCL	NHL
		208V DATA RACK	30	2	1	1600			2	20	1	RECEPTACLES		
		"	-	-	3		1600		4	20	1	RECEPTACLES		
		120V DATA RACK	20	1	5			1000	6	20	1	FLY FAN		
		COMM. CABINET	20	1	7	600 / 800			8	20	1	TICKET BOOTH RECEPT		
		EMS/LTG CONTROL	20	1	9		800 / 800		10	20	1	TICKET BOOTH RECEPT		
		SECURITY PANEL	20	1	11			600	12	20	1	SPARE		
		FIRE ALARM (NOTE1) (1)	20	1	13	600			14	20	1	SPARE		
		FIRE ALARM (NOTE1) (1)	20	1	15		600		16	20	1	SPARE		
		RECEPTACLES	20	1	17			600	18	20	1	SPARE		
		FLAT PANEL	20	1	19	700			20	20	1	SPARE		
		FLAT PANEL	20	1	21		700		22	20	1	SPARE		
		FLY FAN	20	1	23			612	24	20	1	SPARE		
		FLY FAN	20	1	25	612			26	20	1	SPARE		
		FLY FAN	20	1	27		612		28	20	1	SPARE		
		FLAT PANEL	20	1	29			700	30	20	1	SPARE		
		FLAT PANEL	20	1	31	700			32	20	1	SPARE		
		FLY FAN	20	1	33		612		34	20	1	SPARE		
		FLY FAN	20	1	35			612	36	20	1	SPARE		
		FLY FAN	20	1	37	612			38	20	1	SPACE		
		SPACE	20	1	39				40	20	1	SPACE		
		SPACE	20	1	41				42	20	1	SPACE		

SPECIAL PANEL NOTE | NOTE #1 | NOTE #2

		PHASE A	PHASE B	PHASE C
NHL= Non Harmonic Load	TOTAL LOAD PER PHASE	6224	5724	4124
LCL= Long Continuous Load	25% LONG CONTINUOUS LOADS	0	0	0
	SUB PANEL			
Max. Neut. Load	SUB PANEL			
88 AMPS	TOTAL CONNECTED LOAD	6224	5724	4124

HIGH PHASE 6224 / 0.9pf = VA @ 120V 57.6 AMPS
ALL PHASES 16072 / 0.9pf = VA @ 208V/3PH 49.6 AMPS
DEMAND PER CEC 220-86 AMPS

M:\Panel Schedule\2021\21087 Grossmont HS Kitchen & Weight room\KB 3:13 PM6/9/2022

PANEL WA

120/208 ▼ | 120/208 3PH, 4WIRE | 200 AMP | Main: Breaker X / Lug | Enclosure: Recessed X / Surface | ENCLOSURE TYPE: X NEMA TYPE 1, NEMA TYPE 3R, NEMA TYPE 4X | ENCLOSURE NOTE

200% Neutral Bus
(INTEGRAL)TVSS Protection X
(REMOTE)TVSS Protection
Service Entrance Rated
Load Side Feed thru Lugs

GENERAL DISTRIBUTION BREAKER REQUIREMENTS : PROVIDE LOCK ON BREAKER DEVICES FOR ALL EMERGENCY LIGHTING, MOTORS, AND FIRE ALARM EQUIPMENT SERVED FROM THIS PANEL

LCL	NHL	CIRCUIT DESCRIPTION	AMP	POLE	NO	PHASE A	PHASE B	PHASE C	NO	AMP	POLE	CIRCUIT DESCRIPTION	LCL	NHL
	X	RECEPTACLE	20	1	1	800 / 200			2	20	1	ROOF RECEPTACLE		
	X	RECEPTACLE	20	1	3		1000 / 1404		4	20	1	EF M-1.M-2.M-3		
	X	RECEPTACLE	20	1	5			1000 / 1080	6	30	2	DCU M-1, FCU M-1		
	X	RECEPTACLE	20	1	7	800 / 1080			8	-	-	"		
	X	RECEPTACLE	20	1	9		800		10	20	1	SPARE		
		208V RECEPTACLE	30	2	11			1500	12	20	1	SPARE		
		"	-	-	13	1500			14	20	1	SPARE		
		208V RECEPTACLE	30	2	15		1500		16	20	1	SPARE		
		"	-	-	17			1500	18	20	1	SPARE		
	X	RECEPTACLE	20	1	19	700			20	20	1	SPARE		
	X	RECEPTACLE	20	1	21		600		22	20	1	SPARE		
	X	RECEPTACLE	20	1	23			600	24	20	1	SPARE		
	X	RECEPTACLE	20	1	25	600			26	20	1	SPARE		
	X	RECEPTACLE	20	1	27		700		28	20	1	SPARE		
	X	RECEPTACLE	20	1	29			600	30	20	1	SPARE		
	X	RECEPTACLE	20	1	31	600			32	20	1	SPARE		
	X	RECEPTACLE	20	1	33		600		34	20	1	SPARE		
		SPARE	20	1	35				36	20	1	SPARE		
		SPARE	20	1	37				38	20	1	SPACE		
		SPARE	20	1	39				40	20	1	SPACE		
		SPARE	20	1	41				42	20	1	SPACE		

SPECIAL PANEL NOTE | NOTE #1 | NOTE #2

		PHASE A	PHASE B	PHASE C
NHL= Non Harmonic Load	TOTAL LOAD PER PHASE	6280	6604	6280
LCL= Long Continuous Load	25% LONG CONTINUOUS LOADS	0	0	0
	SUB PANEL			
Max. Neut. Load	SUB PANEL			
58 AMPS	TOTAL CONNECTED LOAD	6280	6604	6280

HIGH PHASE 6604 / 0.9pf = VA @ 120V 61.1 AMPS
ALL PHASES 19164 / 0.9pf = VA @ 208V/3PH 59.1 AMPS
DEMAND PER CEC 220-86 AMPS

M:\Panel Schedule\2021\21087 Grossmont HS Kitchen & Weight room\WA 3:13 PM6/9/2022

PANEL WB

120/208 ▼ | 120/208 3PH, 4WIRE | 200 AMP | Main: Breaker / Lug | Enclosure: Recessed / Surface X | ENCLOSURE TYPE: X NEMA TYPE 1, NEMA TYPE 3R, NEMA TYPE 4X | ENCLOSURE NOTE

200% Neutral Bus
(INTEGRAL)TVSS Protection X
(REMOTE)TVSS Protection
Service Entrance Rated
Load Side Feed thru Lugs

GENERAL DISTRIBUTION BREAKER REQUIREMENTS : PROVIDE LOCK ON BREAKER DEVICES FOR ALL EMERGENCY LIGHTING, MOTORS, AND FIRE ALARM EQUIPMENT SERVED FROM THIS PANEL

LCL	NHL	CIRCUIT DESCRIPTION	AMP	POLE	NO	PHASE A	PHASE B	PHASE C	NO	AMP	POLE	CIRCUIT DESCRIPTION	LCL	NHL
	X	CLOTHES WASHER	20	1	1	1000 / 1600			2	30	2	208V DATA RACK		
	X	RECEPTACLE	20	1	3		1000 / 1600		4	-	-	"		
	X	RECEPTACLE	20	1	5			1000 / 1200	6	20	1	120V DATA RACK		
	X	RECEPTACLE	20	1	7	800 / 600			8	20	1	SECURITY PANEL		
	X	RECEPTACLE	20	1	9		800 / 800		10	20	1	EMS/LTG PANEL		
		CLOTHES DRYER	50	2	11			3000 / 600	12	20	1	FIRE ALARM (NOTE1) (1)		
		"	-	-	13	3000 / 600			14	20	1	FIRE ALARM (NOTE1) (1)		
	X	RECEPTACLE	20	1	15		800 / 600		16	20	1	RECEPTACLE		
	X	RECEPTACLE	20	1	17			600 / 200	18	20	1	ROOF RECEPTACLE		
	X	RECEPTACLE	20	1	19	400 / 1080			20	30	2	DCU W-1		
	X	RECEPTACLE	20	1	21		400 / 1080		22	-	-	"		
	X	RECEPTACLE	20	1	23			400 / 1080	24	30	2	DCU W-2		
	X	RECEPTACLE	20	1	25	1000 / 1080			26	-	-	"		
	X	RECEPTACLE	20	1	27		1000 / 600		28	20	1	COMM. CABINET		
	X	RECEPTACLE	20	1	29			1000 / 800	30	20	1	ROLL UP DOOR		
	X	RECEPTACLE	20	1	31	800 / 800			32	20	1	ROLL UP DOOR		
	X	RECEPTACLE	20	1	33		600 / 800		34	20	1	ROLL UP DOOR		
	X	RECEPTACLE	20	1	35			400	36	20	1	SPARE		
	X	RECEPTACLE	20	1	37	400			38	20	1	SPARE		
	X	RECEPTACLE	20	1	39		600		40	20	1	SPARE		
	X	RECEPTACLE	20	1	41			600	42	20	1	SPARE		

SPECIAL PANEL NOTE: Panel shall be min. 54 circuits.
NOTE #1 PROVIDE RED LOCK-ON BREAKER DEVICE
NOTE #2

		PHASE A	PHASE B	PHASE C
NHL= Non Harmonic Load	TOTAL LOAD PER PHASE	13160	10680	10880
LCL= Long Continuous Load	25% LONG CONTINUOUS LOADS	0	0	0
	SUB PANEL			
Max. Neut. Load	SUB PANEL			
124 AMPS	TOTAL CONNECTED LOAD	13160	10680	10880

HIGH PHASE 13160 / 0.9pf = VA @ 120V 121.9 AMPS
ALL PHASES 34720 / 0.9pf = VA @ 208V/3PH 107.2 AMPS
DEMAND PER CEC 220-86 AMPS

M:\Panel Schedule\2021\21087 Grossmont HS Kitchen & Weight room\WB 3:13 PM6/9/2022

REGISTERED PROFESSIONAL ENGINEER — NO.E 14781 — Exp. 6-30-2023 — ELECTRICAL — STATE OF CALIFORNIA
LICENSED ARCHITECT — ROGER CLARKE — No. C-21340 — Exp. 10-31-23 — STATE OF CALIFORNIA
#21087
STAMPS
6/21/2022 9:09:36 AM

IDENTIFICATION STAMP
DIV. OF THE STATE ARCHITECT
APP: 04-120895 INC:
REVIEWED FOR
SS ☑ FLS ☑ ACS ☑
DATE: 06/27/2022

JOHNSON
CONSULTING ENGINEERS, INC.
Power | Lighting | Multimedia
Communications | Data Networking
12875 Brookprinter Place, Suite 300
Poway, CA 92064
P 858.679.4030 | F 858.513.0559
www.jce-inc.com
CONSULTANT BRANDING

RUHNAU CLARKE ARCHITECTS

KEY NOTES:

(1) PROVIDE RED LOCK-ON BREAKER DEVICE. IDENTIFY CIRCUIT BREAKER NUMBER AT FIRE ALARM CONTROL UNIT.

KB	WA	WB

GHS KITCHEN & WEIGHTROOM MOD:

PROJECT No. :1-30-55
6/21/2022 9:09:36 AM

DRAWN BY: CHECKED BY:
ISSUE No.______ DATE________ DESCRIPTION________________ REVISION No.______ DATE________ DESCRIPTION________________
ISSUE No.______ DATE________ DESCRIPTION________________ REVISION No.______ DATE________ DESCRIPTION________________
ISSUE No.______ DATE________ DESCRIPTION________________ REVISION No.______ DATE________ DESCRIPTION________________
ISSUE No.______ DATE________ DESCRIPTION________________ REVISION No.______ DATE________ DESCRIPTION________________

RUHNAUCLARKE.COM
3775 TENTH STREET, RIVERSIDE CALIFORNIA 92501 (951) 684 4664 / 5751 PALMER WAY, SUITE C, CARLSBAD CALIFORNIA 92010 (760) 438 5899

GHS KITCHEN & WEIGHTROOM MOD
GROSSMONT HIGH SCHOOL
1100 MURRAY DR, EL CAJON, CA 92020
GROSSMONT UNION HIGH SCHOOL

PANEL SCHEDULES

E9.2

FIRE DEPARTMENT NOTES

1. BUILDING UNDERGOING CONSTRUCTION, ALTERATION OR DEMOLITION SHALL BE IN ACCORDANCE WITH LOCAL CODE.
2. ADDRESS SHALL BE PROVIDED FOR ALL NEW & EXISTING BUILDINGS IN A POSITION AS TO BE PLAINLY VISIBLE & LEGIBLE FROM THE STREET OR ROAD FRONTING THE PROPERTY. (VERIFY WITH LOCAL CODE)
3. ANY TIME A BUILDING IS OCCUPIED, THE MEANS OF EGRESS SHALL BE ILLUMINATED AT AN INTENSITY OF NOT LESS THAN 1 FOOTCANDLE AT THE WALKING SURFACE. (VERIFY WITH LOCAL CODE)
4. EXIT SIGNS SHALL HAVE TWO SOURCES OF POWER IN ACCORDANCE WITH LOCAL CODE EXIT. SIGNS SHALL BE INTERNALLY ILLUMINATED. (VERIFY WITH LOCAL CODE)
5. DECORATIVE MATERIALS SHALL BE MAINTAINED IN A FLAME-RETARDANT CONDITION. (VERIFY WITH LOCAL CODE)
6. ALL EXIT DOORS SHALL BE OPENABLE FROM THE INSIDE WITHOUT THE USE OF A KEY OR SPECIAL KNOWLEDGE OR EFFORT, NO DEADBOLTS, ETC. (VERIFY WITH LOCAL CODE)
7. (WHERE COOKING EQUIPMENT EXIST) A FIRE EXTINGUISHER LISTED & LABELED FOR CLASS K FIRES SHALL BE INSTALLED WITHIN 30 FEET OF COMMERCIAL FOOD HEAT-PROCESSING EQUIPMENT. (VERIFY WITH LOCAL CODE)
8. AT LEAST ONE FIRE EXTINGUISHER WITH A MINIMUM RATING OF 2-A-10-BC SHALL BE PROVIDED WITHIN 75 FEET MAXIMUM TRAVEL DISTANCE FOR EACH 6000 SQUARE FOOT OR PORTION THEREOF ON EACH FLOOR. (VERIFY WITH LOCAL CODE)
9. COMPLETE PLANS & SPECIFICATIONS FOR FIRE-EXTINGUISHING EQUIPMENT, INCLUDING AUTOMATIC SPRINKLERS & WET & DRY STANDPIPES: HALON SYSTEMS & OTHER SPECIAL TYPES OF AUTOMATIC FIRE-EXTINGUISHING SYSTEMS: BASEMENT PIPE INLETS: AND OTHER FIRE PROTECTION SYSTEMS AND APPURTENANCES THERETO SHALL BE SUBMITTED TO FIRE & LIFE SAFETY FOR REVIEW AND APPROVAL PRIOR TO INSTALLATION. (VERIFY WITH LOCAL CODE)
10. FIRE-EXTINGUISHING SYSTEMS SHALL BE INSTALLED IN ACCORDANCE WITH CODE. (VERIFY WITH LOCAL CODE)
11. (WHERE COOKING EQUIPMENT EXIST) APPROVED AUTOMATIC FIRE-EXTINGUISHING SYSTEM SHALL BE PROVIDED FOR THE PROTECTION OF COMMERCIAL-TYPE COOKING EQUIPMENT. SEPARATE COMPLETE PLANS FOR THESE SYSTEMS SHALL BE SUBMITTED TO FIRE & LIFE SAFETY FOR REVIEW & APPROVAL PRIOR TO INSTALLATION. (VERIFY WITH LOCAL CODE)
12. (WHERE COOKING EQUIPMENT EXIST) FIRE EXTINGUISHERS PROVIDED FOR THE PROTECTION OF COOKING GREASE FIRES SHALL BE OF AN APPROVED TYPE COMPATIBLE WITH THE AUTOMATIC FIRE EXTINGUISHING SYSTEM AGENT IN ACCORDANCE WITH LOCAL CODE WITHIN 30 FEET OF COMMERCIAL COOKING EQUIPMENT. (VERIFY WITH LOCAL CODE)
13. FIRE EXTINGUISHER LOCATIONS & RATINGS TO BE DETERMINED BY THE FIRE INSPECTOR.
14. STORAGE, DISPENSING, OR USE OF ANY FLAMMABLE OR COMBUSTIBLE LIQUIDS, FLAMMABLE GASES & HAZARDOUS CHEMICALS SHALL COMPLY WITH CODE REGULATIONS.
15. ALL FIRE EXTINGUISHERS SHALL BE PROVIDED BY G.C. G.C. TO INSPECT EXISTING SPRINKLER SYSTEM & TO PROVIDE MODIFICATION & REPAIR (IF APPLICABLE) TO MEET FIRE DEPT. REQUIREMENTS.
16. BUILDING OCCUPANT SHALL SECURE PERMITS REQUIRED BY THE FIRE DEPARTMENT FROM THE FIRE PREVENTION BUREAU PRIOR TO OCCUPYING THIS BUILDING. (VERIFY WITH LOCAL CODE)
17. ALL VALVES CONTROLLING THE WATER SUPPLY FOR AUTOMATIC SPRINKLER SYSTEMS & WATER-FLOW SWITCHES ON ALL SPRINKLER SYSTEMS SHALL BE ELECTRONICALLY MONITORED WHERE THE NUMBER OF SPRINKLERS IS 20 OR MORE. (VERIFY WITH LOCAL CODE)

FIXTURE EXHAUST & MAKE-UP AIR SYSTEM NOTES

1. GENERAL CONTRACTOR TO PROVIDE FINISHED SHAFTS & OPENINGS THROUGH CEILING & ROOF FOR EXHAUST & MAKE-UP AIR DUCTS. OPENINGS & SHAFTS TO BE SIZED & LOCATED PER FIXTURE EXHAUST & MAKE-UP AIR PLAN. EXHAUST DUCTS SHAFTS & OPENINGS TO BE CONSTRUCTED SO AS TO HAVE MINIMUM 1 HOUR FIRE RATING, OR AS REQUIRED BY GOVERNING CODES.
2. ALL ROOF PENETRATIONS MUST HAVE A MINIMUM OF 4" HIGH CURB WITH ROOFING MATERIAL COVED UP FACE SO ONLY TOP SURFACE REQUIRES WEATHERPROOFING. GENERAL CONTRACTOR TO WEATHERPROOF ALL ROOF OPENINGS.
3. GENERAL CONTRACTOR TO PROVIDE 6" HIGH PLATFORMS & SLEEPERS ON ROOF FOR COMPRESSOR PAD & MAKE-UP AIR UNITS. TOPS OF ALL PADS TO BE COVERED IN GALVANIZED SHEET METAL BY GENERAL CONTRACTOR. VERIFY SIZE & LOCATION OF PADS WITH FIXTURE SHEET METAL FABRICATOR & REFRIGERATION CONTRACTOR.
4. ELECTRICAL CONTRACTOR TO PROVIDE POWER ON ROOF FOR THE CONNECTION OF ALL EXHAUST & MAKE-UP AIR SYSTEM COMPONENTS. SUPPLY SHUT-OFF OR DISCONNECT SWITCHES FOR EACH UNIT SO THAT EACH PIECE OF EQUIPMENT CAN BE SWITCHED OFF ON ROOF. ALL ELECTRICAL LINES, CONNECTIONS, & SWITCHES ON ROOF MUST BE WEATHERPROOFED. THIS WORK TO BE DONE BY ELECTRICIAN UNDER HIS CONTRACT WITH THE GENERAL CONTRACTOR.
5. ELECTRICAL CONTRACTOR TO PROVIDE, INSTALL, AND HOOK-UP SWITCH BOXES FOR OPERATION MAKE-UP AIR SYSTEMS. MECHANICAL CONTRACTOR TO PROVIDE ELECTRICIAN WITH WIRING DIAGRAM SHOWING CONNECTION OF UNITS. ELECTRICAL CONTRACTOR TO HOOK UP EXHAUST UNITS WITH SINGLE SWITCH WITH PILOT LIGHT.
6. PLUMBER TO PROVIDE WATER LINES, GAS LINES & NECESSARY DRAINS ON ROOF FOR CONNECTIONS TO MAKE-UP AIR SYSTEM COMPONENTS. SUPPLY READILY ACCESSIBLE SHUT OFF VALVES IN GAS LINES TO EACH DUST FURNACE & IN WATER LINES TO EACH EVAPORATIVE COOLER. EVAPORATIVE COOLERS TO DRAIN TO ROOF DRAINS. THIS WORK TO BE DONE BY THE PLUMBER UNDER HIS CONTRACT TO THE GENERAL CONTRACTOR.
7. BUILDING HEATING & VENTILATION CONTRACTOR TO MECHANICALLY VENT ALL RESTROOMS & STOREROOMS UNDER THE GENERAL CONTRACT. SEE MECHANICAL PLANS.
8. ELECTRICAL CONTRACTOR TO PROVIDE ALL WIRING, CONDUIT, CONNECTIONS & CONTROL WIRING TO EXHAUST & MAKE-UP AIR CONTROLS, VFD'S, & HOOD SENSORS. REVIEW ALL WIRING DIAGRAMS ON EXHAUST HOOD SHEETS & MECHANICAL SHEETS.

FIXTURE REFRIGERATION NOTES

1. ELECTRICAL CONTRACTOR TO SUPPLY & INSTALL ALL CONDUIT & PULL BOXES UNDER THE GENERAL CONTRACT FOR FIXTURE REFRIGERATION SYSTEM. ALL FULLY OR PARTIALLY EXPOSED PULL BOXES TO BE COMPLETE WITH STAINLESS STEEL COVER PLATES. SIZE OF PULL BOXES TO BE AS SHOWN ON FOOD SERVICE DRAWING UNDERGROUND PLAN.
2. CONDUIT TO BE ROUND APPROVED TYPE, DIAMETER AS INDICATED WITH MINIMUM BENDING RADIUS OF 24" (FACTOR L's WILL NOT BE PERMITTED). VERIFY WITH CODES TYPE OF CONDUIT REQUIRED. GALVANIZED CONDUIT SHOULD NOT BE USED WITH COPPER REFRIGERATION SYSTEM.
3. ALL HORIZONTAL DIMENSIONS SHOWN ON FIXTURE REFRIGERATION PLAN ARE GIVEN FROM FACE OF FINISHED WALLS TO CENTER LINES OF PULL BOX OR CONDUIT AND/OR FROM CENTER LINE OF PULL BOX OR CONDUIT TO CENTER LINE OF PULL BOX OR CONDUIT, UNLESS OTHERWISE NOTED.
4. HEIGHT OF PULL BOXES ON WALL IS GIVEN FROM FINISHED FLOOR TO CENTER LINE OF PULL BOX.
5. ELECTRICAL CONTRACTOR TO SUPPLY & INSTALL CONDUIT FOR REMOTE Co2, SYRUP & BEER LINES FOR DISPENSING SYSTEMS AS CALLED FOR ON UNDERGROUND PLAN.
6. ELECTRICAL CONTRACTOR TO SUPPLY POWER AT COMPRESSOR RACK FOR & CONNECT COMPRESSORS COMPLETE WITH DISCONNECT SWITCHES, UNLESS NOTED OTHERWISE HEREIN. SEE FIXTURE REFRIGERATION SCHEDULE FOR REQUIREMENTS.
7. FIXTURE REFRIGERATION CONTRACTOR TO SUPPLY & INSTALL ALL COMPRESSORS, LINES, FITTINGS & VALVES FOR COMPLETE FIXTURE REFRIGERATION SYSTEM.
8. FIXTURE REFRIGERATION CONTRACTOR TO SUPPLY & INSTALL ALL COMPRESSORS, LINES, FITTINGS & VALVES FOR COMPLETE FIXTURE REFRIGERATION SYSTEM.
9. GENERAL CONTRACTOR TO SUPPLY AIR FLOW TO COMPRESSOR ROOM AS FOLLOWS: 1000 CFM'S OF AIR PER H.P. ARE REQUIRED TO BE BROUGHT INTO COMPRESSOR ROOM & BLOWN DOWN ACROSS THE FACE OF COMPRESSOR, WITH PROPER GRILLS IN WALL TO SAME AMOUNT OF AIR. IF COMPRESSOR ROOM WILL EXCEED 100°F AT ANY TIME, THE AIR BROUGHT IN MUST BE COOLED.
10. ELECTRICAL CONTRACTOR TO PROVIDE 4-WIRE, OR 5-WIRE TO 7-WIRE COLOR CODED SERVICE FROM FREEZER COMPRESSOR & TIME CLOCK TO FREEZER BLOWER COIL IN FIXTURE FOR AUTOMATIC DEFROST SYSTEM.
11. CONDUIT RUNS ON PLAN FOR SYRUP LINES, Co2, GAS LINES, AND REFRIGERATION LINES ARE SHOWN ONLY SCHEMATIC: CONDUIT SHALL NOT EXCEED 95 FEET IN LENGTH ON HORIZONTAL OR VERTICAL RUNS, AND NO MORE THAN THREE (3) CONDUIT BENDS WITHOUT TERMINATING IN A 12"x12"x4" PULL BOX. PULL BOX LOCATIONS SHALL BE ACCESSIBLE FOR A PULLING OF LINES, CONDUIT BENDS MUST HAVE A MINIMUM RADIUS OF 24".
12. GENERAL CONTRACTOR TO PROVIDE 6" HIGH PLATFORM ON ROOF. TOP OF PLATFORM COVERED WITH GALVANIZED SHEET METAL. SEE PLAN AND/OR SCHEDULE FOR SIZE.
13. REFRIGERATION CONTRACTOR TO PROVIDE HEATER TAPE FOR FREEZER DRAIN LINE. ELECTRICAL CONTRACTOR TO HOOK-UP.

NOTES PERTAINING TO FIXTURE CURB & WALL BACKING PLAN

ALL CURBS FOR KITCHEN EQUIPMENT TO BE G.I. 16GA. UNLESS SPECIFIED OTHERWISE & TO BE PROVIDED & INSTALLED BY K.E.C.

1. ALL CURB DIMENSIONS ARE GIVEN FROM FACE OF FINISHED WALL TO FACE OF FINISHED CURB AND/OR FROM FACE OF FINISHED CURB TO FACE OF FINISHED CURB UNLESS OTHERWISE NOTED ON PLAN.
2. ALL CURB HEIGHTS ARE GIVEN FROM FINISHED FLOOR TO TOP OF FINISHED CURB..
3. ALL CURBS TO RECEIVE EQUIPMENT AND/OR FIXTURES TO BE FINISHED SMOOTH & LEVEL & INTERSECTION OF TOP OF CURB AT FINISHED WALL TO BE FINISHED SQUARE (NO COVE).
4. ALL CURBS IN AREAS WITH TILE FLOORS TO HAVE COVED TILE ON ALL EXPOSED FACES INCLUDING SET-BACKS AT PARTIALLY EXPOSED FLOOR SINK(S).
5. ALL AREAS WITH TILE FLOORS TO HAVE COVED TILE BASE UP WALL. BASES TO BE SET FLUSH WITH FINISHED WALL MATERIAL ABOVE BASE.
6. ALL EXPOSED CONCRETE FLOORS TO BE SEALED WITH FDA APPROVED SEALANT. ALL AREAS WITH EXPOSED CONCRETE FLOORS TO HAVE COVED CONCRETE BASE 6" HIGH, OR APPROVED CERAMIC TOP SET COVE (SLIMFOOT) OR STAINLESS STEEL, UNLESS OTHERWISE SET FLUSH WITH FINISHED WALL MATERIAL ABOVE.
7. ALL CARPET TO BE FLUSH WITH ADJACENT FLOORING MATERIAL.
8. ALL NECESSARY BACKING FOR CANTILEVER TABLE TOPS, SHELVING, ETC., SHALL BE PROVIDED & INSTALLED BY GENERAL CONTRACTOR. SEE BACKING PLAN.
9. SEE FIXTURE PLUMBING PLAN FOR LOCATION OF ALL FLOOR SINKS & FLOOR DRAINS. ALL FLOOR SINKS & FLOOR DRAINS ARE TO BE SET FLUSH WITH FINISHED FLOOR UNLESS OTHERWISE NOTED ON FIXTURE PLUMBING PLAN, PLUMBING SCHEDULE, AS REQUIRED.
10. IN THE EVENT RACEWAY IS INDICATED ON CURB PLAN. THE CONCRETE CONTRACTOR WILL BACK FILL EXPOSED & ACCESSIBLE OPENING OF RACEWAYS & OTHER.
11. PROVIDE 3/4" RADIUS COVE WHERE FINISHED FACE OF CURB INTERSECTS THE FINISHED FLOOR UNLESS OTHERWISE INDICATED ON PLAN & EXPOSED CURBS WHERE FINISHED TOP OF CURB INTERSECTS FINISHED WALL.
12. ALL SLEEVES, OR CANS FOR DISHTABLES OR POT SINKS TO BE SUPPLIED BY FOOD SERVICE EQUIPMENT CONTRACTOR, BUT INSTALLED BY GENERAL CONTRACTOR.
13. ALL WALLS DIRECTLY ADJACENT TO COOKING ITEMS, SUCH AS BROILERS, FRYERS, OVENS, RANGES, ETC., TO BE CONSTRUCTED OF NON-COMBUSTIBLE MATERIALS PER LOCAL CODES.

NOTES TO GENERAL CONTRACTOR

THE FOLLOWING ITEMS AND/OR WORK ARE TO BE PROVIDE AND/OR PERFORMED BY THE GENERAL CONTRACTOR AND/OR HIS SUBCONTRACTORS UNDER THE GENERAL CONTRACT.

1. PROVIDE ALL PLUMBING & ELECTRICAL ROUGH-INS, INTERCONNECTIONS, AND FINAL CONNECTIONS TO ALL RESTAURANT FIXTURES & EQUIPMENT AS SHOWN ON FOOD SERVICE EQUIPMENT CONTRACTOR PLUMBING, ELECTRICAL, REFRIGERATION, AND EXHAUST & MAKE-UP AIR PLANS.
2. VERIFY ALL FIXTURE CURB DIMENSIONS FOR ALL CAFETERIA COUNTERS.
3. PROVIDE & INSTALL ALL CONDUITS & PULL BOXES AS SHOWN ON THE FIXTURE REFRIGERATION & ELECTRICAL PLAN. PROVIDE MINIMUM 6" HIGH LEVEL PLATFORM, COMPLETE WITH METAL TOP & FLASHING FOR REFRIGERATION RACK.
4. G.C. TO PROVIDE & INSTALL BACKING OR BLOCKING IN WALLS & CEILINGS TO PROVIDE SUPPORT AS NECESSARY FOR ALL EQUIPMENT, FIXTURES, & SHELVING (INCLUDING HOODS & FIXTURE CANTILEVER SUPPORTS). SEE ELEVATION SHEETS, EQUIPMENT SCHEDULE, & FABRICATOR'S SHOP DRAWINGS FOR REQUIREMENTS & NOTES.
5. INSTALL CANTILEVER SUPPORTS FOR KITCHEN EQUIPMENT & SLEEVES FOR CANTILEVERED COUNTER STOOLS & KITCHEN EQUIPMENT AS SHOWN ON FIXTURE CURB PLAN. ALL CANTILEVER SUPPORTS & SLEEVES TO BE PROVIDED TO GENERAL CONTRACTOR BY FIXTURE CONTRACTOR & INSTALLED BY GENERAL CONTRACTOR.
6. PROVIDE & INSTALL ALL RESTROOM ACCESSORIES AS SHOWN ON FIXTURE FLOOR PLAN, AND AS NOTED ON FIXTURE SCHEDULES & ARCHITECT'S PLANS.
7. PROVIDE & INSTALL ALL TILE FOR FLOORS, BASES, WAINSCOTS, AND WALLS WHERE SHOWN ON THESE PLANS & ARCHITECTURAL PLANS & AS SPECIFIED BY ARCHITECTS & DECORATOR. TILE ON WALLS IN KITCHEN & SCULLERY AREA TO BE INSTALLED PRIOR TO INSTALLATION OF FIXTURES. DECORATIVE TILE ON WALLS IN SEMI-EXHIBITION COOKING & SERVING AREAS TO BE INSTALLED AFTER INSTALLATION OF FIXTURES.
8. PROVIDE & INSTALL ALL ITEMS NOTED G.C. ON FIXTURE EQUIPMENT SCHEDULES.
9. PROVIDE ALL OPENINGS THROUGH CEILING & ROOF INCLUDING SHAFTS, ENCLOSURES, ETC., FOR FIXTURE MAKE-UP AIR & EXHAUST SYSTEMS, AND PROVIDE PADS AND/OR CURBS ON ROOF. SEE EXHAUST & MAKE-UP AIR PLANS FOR LOCATI ONS. REPAIR AND/OR REPLACE ROOF SEAL TO ORIGINAL CONDITION & IN ACCORDANCE TO ANY REQUIREMENT AS TO NOT VOID WARRANTY IF APPLICABLE.
10. PROVIDE & INSTALL COMPLETE FIXTURE HOT WATER SYSTEM. SEE ARCHITECTURAL MECHANICAL PLANS FOR SPECIFICATIONS & DETAILS.
11. COORDINATE ALL PHASES OF CONSTRUCTION WITH FOOD SERVICE EQUIPMENT CONTRACTOR, INCLUDING NOTIFICATION IN ADVANCE WHEN ROUGH & FINISHED PLUMBING & ELECTRICAL WORK, CURB FORMS, ETC., CAN BE CHECKED.
12. SPRINKLER HEADS IN FREEZER BOXES WILL BE ADEQUATELY PROTECTED AGAINST FREEZING UP BY GENERAL CONTRACTOR IF APPLICABLE.
13. SWINGING DOORS IN PASSAGEWAY SHALL BE PROVIDED WITH WINDOWS WHICH SHALL BE 200 SQUARE INCHES OR OF A SUBSTANTIALLY EQUIVALENT AREA. THE GLASS SHALL BE EITHER SHATTERPROOF OR WIRE GLASS & THE BOTTOM OF THE WINDOWS SHOULD NOT BE MORE THAN 48" ABOVE THE FLOOR. DOORS TO MEET ALL LOCAL CODES.
14. IT IS THE RESPONSIBILITY OF THE OWNER AND/OR GENERAL CONTRACTOR TO INSURE THAT FOOD SERVICE EQUIPMENT CONTRACTOR RECEIVES COPIES OF ALL ADDENDA & CHANGES TO BUILDING PLANS WHICH ARE MADE PRIOR TO & DURING CONSTRUCTION.
15. WHERE NOISY OR VIBRATION PRODUCING EQUIPMENT IS LOCATED ADJACENT TO DINING AREAS, PROVISIONS SHOULD BE MADE TO "DOUBLE STUD" AND/OR SOUND-PROOF COMMON WALLS BY GENERAL CONTRACTOR.
16. GENERAL CONTRACTOR TO BE RESPONSIBLE FOR ALL GENERAL CLEAN UP & DISPOSAL OF ALL TRASH, CARTONS, CRATES, DEBRIS, ETC., PRIOR TO FINAL INSTALLATION OF ALL EQUIPMENT.
17. IT SHALL BE THE RESPONSIBILITY & ACCOUNTABILITY OF THE GENERAL CONTRACT TO ASSURE THAT HIS SUBCONTRACTORS OBTAIN ALL NECESSARY PERMITS REQUIRED FOR THOSE SECTIONS OF THE WORK PRIOR TO THE COMMENCEMENT OF CONSTRUCTION.
18. GENERAL CONTRACTOR SHALL BE PRESENT AT ALL INSPECTIONS AS REQUIRED BY HIS TRADE CONTRACT WITH OWNER.
19. GENERAL CONTRACTOR TO WARRANTY ALL LABOR & MATERIAL FOR A PERIOD OF ONE (1) YEAR FROM CERTIFICATE OF COMPLETION. OR AS CALLED OUT IN SPECIFICATIONS.
20. K-STYLE FIRE EXTINGUISHER(S) ARE REQUIRED IN THE KITCHEN AREA WHEN WET CHEMICAL FIRE SUPPRESSION SYSTEMS ARE USED. GENERAL CONTRACTOR TO PROVIDE AND INSTALL K-STYLE FIRE EXTINGUISHER(S) AS REQUIRED BY LOCAL CODE.

HEALTH DEPARTMENT NOTES

THE FOLLOWING ENVIRONMENTAL HEALTH NOTES WILL ENCOMPASS MOST FOOD ESTABLISHMENTS BUT ARE NOT MEANT TO BE COMPREHENSIVE FOR ALL FOOD FACILITIES OR SITUATIONS. THE GENERAL CONTRACTOR AND KITCHEN EQUIPMENT CONTRACTOR SHALL COMPLY WITH THESE MINIMUM STANDARDS, DRAWINGS AND SPECIFICATIONS.

- THE TOTAL SQUARE FOOTAGE OF ESTABLISHMENT IS: **2,565** S.F.
- THE MUNICIPAL WATER DISTRICT THE FOOD FACILITY IS SERVED BY IS: **SAN DIEGO**
- THE MUNICIPAL SEWER DISTRICT THE FOOD FACILITY IS SERVED BY IS: **SAN DIEGO**
- THE NUMBER OF EMPLOYEES PER SHIFT (INCLUDING OWNER & MANAGER): **5**
- THE TYPE OF FOOD FACILITY IS: **SINGLE-SERVICE CONSUMER UTENSILS.**
- ALCOHOLIC BEVERAGES **WILL NOT** BE CONSUMED ON THE PREMISES.
- FOOD **IS** PLACED WITHIN THE MOUTH ZONE OF THE CUSTOMER REQUIRING A SNEEZE GUARD. SNEEZE GUARDS ARE REQUIRED.
- THERE WILL NOT BE FLOOR MATS TO CLEAN (MOP SINKS TO BE 24"x24")

1. A CONCRETE SLAB IS PROVIDED FOR TRASH, GARBAGE, AND GREASE CONTAINER. IF WALLS ENCLOSE AREA, THE INTERIOR WALL SURFACES WILL BE SMOOTH, SEALED & WASHABLE.
2. ALL FOOD-RELATED AND UTENSIL-RELATED EQUIPMENT SHALL MEET OR BE EQUIVALENT TO SANITATION STANDARDS ESTABLISHED BY AN AMERICAN NATIONAL STANDARDS INSTITUTE (ANSI) ACCREDITED PROGRAM.
3. ALL FLOOR MOUNTED EQUIPMENT WILL BE INSTALLED ON MINIMUM 6" SANITARY LEGS, CASTERS, OR COMPLETELY SEALED IN POSITION ON A 4" HIGH CURB w/ CONTINUOUSLY COVED BASE. COUNTERTOP EQUIPMENT WILL BE ON 4" SANITARY LEGS OR SEALED TO THE COUNTER UNLESS READILY MOVABLE.
4. IF SOFT DRINK, ICE OR OTHER DISPENSERS ARE SELF-SERVICE, OR IF REFILLS ARE PROVIDED THEY MUST BE PUSH BUTTON TYPES, OR LEVER TYPES WHERE THE LEVER CONTACTS THE CONTAINER AT LEAST 1" BELOW THE RIM.
5. ANY OPENABLE WINDOWS, VENT OPENINGS, OR OTHER SIMILAR OPENINGS MUST BE PROVIDED WITH TIGHT FITTING SCREENS OF MINIMUM 16 MESH TO THE INCH. WINDOWS TO BE FIXED AT FOOD PREP, UTENSIL-WASHING, OPEN FOOD & UTENSIL STORAGE AREAS.
6. ALL EXTERIOR DOORS OPEN OUTWARD AND ARE SELF-CLOSING (SC) & TIGHT FITTING.
7. BI-FOLD, FRENCH, ACCORDION STYLE AND ROLL-UP DOORS CANNOT OPEN INTO THE FOOD PREP, UTENSIL WASHING OR UNPACKAGED FOOD SERVICE AREAS.
8. TOILET ROOM & DRESSING ROOM DOORS MUST BE SELF-CLOSING (SC), TIGHT FITTING.
9. DELIVERY DOORS TO HAVE AIR CURTAIN FANS THAT SPAN THE WIDTH OVER THE DOOR. THE FAN MUST ACTIVATE VIA A MICROWSWITCH PROVIDING A MINIMUM VELOCITY OF 1600 FPM MEASURED 3 FEET ABOVE THE GROUND.
10. A MINIMUM OF 20 FOOT-CANDLES (215 LUX) OF LIGHT MEASURED 30" OFF FLOOR IS PROVIDED IN WALK-IN REFRIGERATED STORAGE & DRY STORAGE ROOMS & IS PROVIDED WHERE FOOD IS PROVIDED FOR CONSUMER SELF-SERVICE, WHERE FRESH PRODUCE OR PREPACKAGED FOODS ARE SOLD OR OFFERED FOR CONSUMPTION; INSIDE EQUIPMENT SUCH AS REACH-IN & UNDERCOUNTER REFRIGERATORS; IN AREAS USED FOR HANDWASHING, EQUIPMENT & UTENSIL STORAGE, AND IN TOILET ROOMS.
11. A MINIMUM OF 50 FOOT-CANDLES (538 LUX) OF LIGHT MEASURED 30" OFF FLOOR IS PROVIDED WHEN WORKING WITH FOOD OR WORKING WITH UTENSILS OR EQUIPMENT SUCH AS KNIVES, SLICERS, GRINDERS, OR SAWS WHERE EMPLOYEE SAFETY IS A FACTOR AND IN ALL AREAS DURING PERIODS OF CLEANING.
12. SHATTER SHIELDS FOR ALL LIGHTS ABOVE FOOD PREPARATION, WORK AND STORAGE AREAS WILL BE PROVIDED.
13. ALL WAREWASHING SINKS TO HAVE 3-COMPARTMENTS THAT ARE A MINIMUM SIZE OF AT LEAST 18"x18"x12 DEEP WITH A MINIM 18" DRAINBOARD AT EACH END. IF AGAINST A WALL, IT MUST HAVE AN 8" INTEGRAL BACKSPLASH. HOWEVER, IT MUST BE CAPABLE OF ACCOMMODATING THE LARGEST UTENSIL TO BE WASHED. A WAREWASHING MACHINE DOES NOT SUBSTITUTE FOR THE SINK REQUIREMENT.
14. SINKS TO HAVE SPOUT(S) CAPABLE OF REACHING EACH COMPARTMENT.
15. FOOD PREP SINK COMPARTMENT(S) TO BE AT LEAST 18"x18"x12" DEEP (OR 16"x20"x12" DEEP) WITH A MINIMUM OF 18" DRAINBOARD. SEPARATE FOOD PREP SINKS TO BE PROVIDED FOR MEATS & PRODUCE.
16. THE 3 OR 4 COMPARTMENT BAR SINK TO BE AT LEAST 12"x12"x10" DEEP (OR 10"x14"x10" DEEP) WITH A MINIMUM 18" DRAINBOARD AT EACH END.
17. A SEPARATE WET WASTE DUMP FIXTURE SHALL BE PROVIDED FOR DISPOSAL OF DRINK OR WASTE ICE OR COFFEE WASTE.
18. EACH HANDWASHING SINK MUST HAVE PERMANENTLY MOUNTED SINGLE-SERVICE SOAP & PAPER TOWEL DISPENSERS.
19. THE HOT WATER HEATER WILL BE A COMMERCIAL TYPE CAPABLE OF CONSTANTLY SUPPLYING HOT WATER AT A TEMPERATURE OF 120°F TO ALL SINKS. IN SIZING THE WATER HEATER, THE PEAK HOURLY DEMAND FOR ALL SINKS, ETC., ARE ADDED TOGETHER TO DETERMINE THE MINIMUM REQUIRED RECOVERY RATE.
20. ALL LAVATORIES OR HAND SINKS WILL HAVE A COMBINATION FAUCET OR PREMIXING FAUCET CAPABLE OF SUPPLYING WATER TEMPERED TO 100°F. SELF-CLOSING OR METERED FAUCET TO PROVIDE AT LEAST 15 SECONDS OF WATER WITHOUT REACTIVATION.
21. ALL PLUMBING, ELECTRICAL & GAS SHALL BE CONCEALED WITHIN THE BUILDING STRUCTURE TO AS GREAT AN EXTENT AS POSSIBLE. ALL EXPOSED CONDUITS, PLUMBING, ETC. SHALL BE INSTALLED AT LEAST 6" OFF FLOOR AND 3/4" FROM WALLS USING STANDOFF BRACKETS.
22. CONDUITS, PLUMBING OR PIPING CANNOT BE INSTALLED ACROSS ANY AISLE WAY, TRAFFIC AREA OR DOOR OPENING.
23. MULTIPLE RUNS OR CLUSTERS OF CONDUIT OR PIPELINES SHALL BE FURRED IN OR ENCASED IN AN APPROVED SEALED ENCLOSURE.
24. ALL LIQUID WASTE SHALL BE DRAINED BY MEANS OF INDIRECT WASTE PIPES INTO A FLOOR SINK. FLOOR SINKS ARE TO BE INSTALLED FLUSH WITH THE FINISHED FLOOR SURFACE & HAVE APPROPRIATE EASILY REMOVABLE SAFETY COVER GRATES.
25. FLOOR SINK TO BE 50% EXPOSED WHEN NO ACCESS IS PROVIDED FOR CLEANING OR BE IN LINE WITH THE FRONT FACE OF ELEVATED FREESTANDING EQUIPMENT.
26. APPROVED BACKFLOW PREVENTER SHALL BE PROPERLY INSTALLED UPSTREAM OF ANY POTENTIAL HAZARD BETWEEN THE POTABLE WATER SUPPLY & A SOURCE OF CONTAMINATION. HOSES SHALL NOT BE ATTACHED TO A FAUCET OF HOSE BIB UNLESS AN APPROVED BACKFLOW PREVENTER IS PROVIDED.
27. WATER SUPPLY TO CARBONATORS SHALL BE PROTECTED BY AN APPROVED REDUCED PRESSURE PRINCIPLE BACKFLOW PREVENTER. THE RELIEF VALVE SHALL DRAIN INDIRECTLY TO SEWER WITH A LEGAL AIR GAP.
28. WHERE FLOOR MATS WILL BE USED, THE JANITORIAL SINK TO BE A MINIMUM 24"x36" FLOOR MOUNTED TYPE. MOPS SHALL BE PLACED IN A POSITION THAT ALLOWS THEM TO AIR-DRY WITHOUT SOILING WALLS, EQUIPMENT, OR SUPPLIES.
29. THE JANITORIAL SINK FAUCET WILL HAVE A THREADED OUTER LIP FOR HOSE ATTACHMENT & APPROVED BACKFLOW PREVENTION DEVICE. NO CHEMICAL DISPENSING SYSTEMS OR SHUTOFF VALVES TO BE ATTACHED TO MOP SINK FAUCET OUTLET (UNLESS A "SIDEKICK" PLUMBING DEVICE IS INSTALLED).
30. NO CONDENSATE OR WASTEWATER INCLUDING HVAC WILL DRAIN INTO THE JANITORIAL SINK.
31. GREASE TRAP TO BE LOCATED OUTSIDE THE FOOD SERVICE ACTIVITY AREA, FLUSH WITH THE FINISHED FLOOR WHEN INDOORS. LOCAL WASTE WATER DISTRICT OR BUILDING DEPARTMENT TO BE CONTACTED FOR GREASE REMOVAL REQUIREMENTS.
32. FLOOR DRAINS SHALL BE INSTALLED IN FLOORS THAT ARE WATER-FLUSHED FOR CLEANING AND IN AREAS WHERE PRESSURE SPRAY METHODS FOR CLEANING EQUIPMENT ARE USED, IN RESTROOMS, JANITORIAL ROOMS, SCULLERIES, AND AT BARS WITH WAREWASHING. FLOOR SURFACES IN AREAS PURSUANT TO THIS SHALL BE SLOPED 1:50 TO THE FLOOR DRAINS.
33. ADEQUATE VENTILATION IS TO BE PROVIDED TO ALL TOILET ROOMS, JANITOR CLOSETS WITH MOP SINKS, INDOOR TRASH ROOMS, AND IN DRESSING/ CHANGING ROOM(S).
34. THE FINISHED FLOOR WILL HAVE A SMOOTH SURFACE UNDER ALL EQUIPMENT & WALKWAYS WILL HAVE A LIGHT TEXTURE ONLY.
35. THE PAINT USED ON WALLS & CEILINGS OF ALL KITCHEN, FOOD PREPARATION, WORK, AND STORAGE AREAS WILL BE A GLOSS OR SEMI-GLOSS ENAMEL. FINISH MATERIAL SHALL BE A LIGHT COLOR WITH A REFLECTANCE VALUE OF 70% OR GREATER, FOR EASY CLEANING.
36. PRIOR TO INSTALLATION, A SAMPLE OF CEILING TILE IS TO BE SUBMITTED TO ENVIRONMENTAL HEALTH FOR APPROVAL.
37. COLD STORAGE ROOMS SHALL BE PROVIDED WITH A SECTION OF SHELVING INSTALLED TO HOLD SHALLOW COOL DOWN PANS - NOT TO EXCEED 4" IN HEIGHT. SPACE BETWEEN SHELVING TO BE AT LEAST 8" HIGH.
38. BACKUP DRY STORAGE SHELVING SHALL BE A MINIMUM OF 96 LINEAR FEET (MEASURED WITH TIERS) OR 25% OF KITCHEN, FOOD PREP, WORK AREAS, WHICHEVER IS GREATER. SHELVING SHALL BE AT LEAST 18" DEEP & START A MINIMUM 6" OFF THE FLOOR SURFACE.
39. SHELVING OVER WET AREAS (SINKS, MOP SINKS, ETC.) AND FOOD PREP SURFACES WILL BE METAL.
40. ALL SEAMS, GAPS OPENINGS TO BE PROPERLY SEALED.

ORNESS | DESIGN GROUP | INC

A FOODSERVICE DESIGN AND EQUIPMENT COMPANY

595 MIRA MESA BLVD., SUITE H SAN DIEGO, CALIFORNIA 92121 | TEL: 858.457.5955 FAX: 858.457.5950 | EMAIL: INFO@ORNESSDESIGNGROUP.COM
WWW.ORNESSDESIGNGROUP.COM

GROSSMONT HIGH SCHOOL

1100 MURRAY DRIVE
EL CAJON, CALIFORNIA 92020

• FOODSERVICE TENANT IMPROVEMENT DRAWINGS •

FINISH SCHEDULE (SEE ARCHITECTURAL PLANS FOR FINISH SPECIFICATIONS)

	FLOOR			COVE BASE (COVE BASE 3/8" MIN. RADIOUS)				CEILING				WALL					
	EPOXY	COMMERICAL QUARRY TILE	SEALED CONCRETE	EPOXY	COMMERICAL QUARRY TILE	SLIMFOOT	SHEET VINYL	SUSPENDED T-BAR WITH VINYL-FACED ACOUSTIC PANELS	PREFABRICATED G.I. PANELS	PAINTED GYP. BOARD		PAINTED GYP. BOARD	FULL HEIGHT STAINLESS STEEL OR TILE PANELS	FULL HEIGHT F.R.P. PANELS	PREFABRICATED G.I. PANELS	F.R.P. OR TILE UP TO 48" MIN. WITH PAINTED GYP. BOARD ABOVE	
KITCHEN		●			●			●						●			
COOKLINE		●			●			●					●				
DISH WASHING		●			●			●						●			
PREP		●			●			●						●			
EMPLOYEE RESTROOM		●			●					●						●	
WALK-IN COOLER & FREEZER		●			●				●						●		
DRY STORAGE		●			●					●				●			
CUSTODIAL		●			●					●				●			
SPEED LINES	●			●				●						●			

FINISH NOTES

1. ACOUSTIC CEILING PANELS TO BE ARMSTRONG CLEANROOM OR EQUAL.
2. REFER TO ARCHITECTURAL DRAWINGS FOR COLORS AND SPECIFICATIONS.
3. CONTRACTOR TO PROVIDE & SUBMIT A SAMPLE OF FLOORING & CEILING FINISHES TO HEALTH DEPARTMENT FOR APPROVAL PRIOR TO CONSTRUCTION.
4. WATER RESISTANT SURFACE BEHIND AND ABOVE WET EQUIPMENT AT THE BAR COUNTER (FRP OR STAINLESS STEEL).
5. FLOORS IN ALL FOOD SERVICE AREAS, INCLUDING REST ROOMS TO BE CONTINUOUS, SELF COVING (MINIMUM 4" HIGH WITH 3/8" RADIUS COVE).
6. SEALED CONCRETE FLOORS MUST BE SEALED WITH A PENETRATING SEALER WHICH IS NON-ABSORBENT, GREASE & ACID RESISTANT, AND DESIGNATED BY THE MANUFACTURER FOR USE IN FOOD SERVICE AREAS. SEALERS MUST BE REGISTERED WITH THE USDA, NSF, OR APPROVED BY ANOTHER PUBLIC HEALTH AGENCY.
7. CERAMIC TILE SLIMFOOT TO BE TOP SET WITH INTEGRAL 3/8" (MIN.) RADIUS COVE. DALE TILE MODEL #S-3619-T OR EQUAL.
8. THE PAINT USED ON WALLS & CEILINGS OF ALL KITCHEN, FOOD PREPARATION, WORK, & STORAGE AREAS WILL BE GLOSS OR SEMI-GLOSS ENAMAL. FINISH COLOR WITH A REFLECTANCE VALUE OF 70% OR GREATER, OR EASY CLEANING.

LEGAL INFORMATION

BUSINESS OWNER: GROSSMONT UNION HIGH SCHOOL DISTRICT
1100 MURRAY DRIVE
EL CAJON, CA 92020

PHONE: 619.644.8150
CONTACT: DENA JOHNSON
EMIAL: dajohnson@guhsd.net

APN:

DRAWING INDEX

K 0 FOODSERVICE TITLE SHEET
K 1 FOODSERVICE FLOOR PLAN
K 2 FOODSERVICE EQUIPMENT SCHEDULE
K 3 FOODSERVICE ELECTRICAL ROUGH-INS
K 4 FOODSERVICE PLUMBING ROUGH-INS
K 5 FOODSERVICE UNDERGROUND
K 6 FOODSERVICE ELEVATIONS
K 7.1 FOODSERVICE SECTIONS
K 7.2 FOODSERVICE TYPICAL DETAILS
K 7.3 FOODSERVICE SEISMIC DETAILS
K 8.1 FOODSERVICE EXHAUST HOODS
K 8.2 FOODSERVICE EXHAUST HOODS
K 8.3 FOODSERVICE EXHAUST HOODS
K 8.4 FOODSERVICE EXHAUST HOODS
K 8.5 FOODSERVICE EXHAUST HOODS
K 8.6 FOODSERVICE EXHAUST HOODS
K 8.7 FOODSERVICE EXHAUST HOODS
K 9.1 FOODSERVICE EQUIPMENT WALK-INS
K 9.2 FOODSERVICE REFRIGERATION

SCOPE OF WORK

-

LICENSED ARCHITECT ROGER CLARKE No. C-21340 Exp. 10-31-23 STATE OF CALIFORNIA

IDENTIFICATION STAMP
DIV. OF THE STATE ARCHITECT
APP: 04-120895 INC:
REVIEWED FOR
SS ☑ FLS ☑ ACS ☑
DATE: 06/27/2022

STAMPS

ORNESS DESIGN GROUP INC
FOODSERVICE DESIGN
5955 MIRA MESA BLVD.
SUITE H
SAN DIEGO, CA, 92121
(858) 457-5955

CONSULTANT BRANDING

RUHNAU CLARKE ARCHITECTS

GHS KITCHEN & WEIGHTROOM MOD: MARCH 1st DSA Submittal:

PROJECT No. :1-30-55
6/13/2022 7:47:14 AM

DRAWN BY: CHECKED BY:
ISSUE No.______ DATE________ DESCRIPTION________ REVISION No.______ DATE________ DESCRIPTION________
ISSUE No.______ DATE________ DESCRIPTION________ REVISION No.______ DATE________ DESCRIPTION________
ISSUE No.______ DATE________ DESCRIPTION________ REVISION No.______ DATE________ DESCRIPTION________
ISSUE No.______ DATE________ DESCRIPTION________ REVISION No.______ DATE________ DESCRIPTION________

RUHNAUCLARKE.COM
3775 TENTH STREET, RIVERSIDE CALIFORNIA 92501(951) 684 4664 / 5751 PALMER WAY, SUITE C, CARLSBAD CALIFORNIA 92010(760) 438 5899

GHS KITCHEN & WEIGHTROOM MOD: MARCH 1st DSA Submittal
GROSSMONT HIGH SCHOOL
1100 MURRAY DR, EL CAJON, CA 92020

FOODSERVICE TITLE SHEET

K 0

1. **ALL CULINARY FACILTIY EQUIPMENT MEETS THE FOLLOWING:**
   - A. LOCATION OF AT LEAST 5%, BUT NO FEWER THAN ONE, OF EACH TYPE OF BUILT-IN ELEMENTS, SUCH AS WORK STATIONS, EQUIPMENT TABLES, SHELVES, HOOKS, SINKS, ETC., IN EACH ROOM OR SPACE OF CULINARY FACILITES TO BE ACCESSIBLE. **(CBC SEC. 11B-804 AND 11B-212)**
   - B. LOCATIONS OF AT LEAST ONE OF EACH TYPE OF TEACHING OR DEMONSTRATION BUILT-IN ELEMENT, SUCH AS DEMONSTRATION STATIONS, EQUIPMENT TABLES, SHELVES, HOOKS, SINKS, ETC., IN EACH ROOM OR SPACE OF CULINARY FACILITIES TO BE ACCESSIBLE.
   - C. LOCATION OF AT LEAST ONE OF EACH TYPE OF SPECIALIZED EQUIPMENT, ASSOCIATED WITH THE SPECIAL USE ACTIVITY IN EACH ROOM OR SPACE OF CULINARY FACILITES TO BE ACCESSIBLE. IF DUE TO NATURE OF EQUIPMENT, IT CANNOT BE MADE ACESSIBLE, PROVIDE AND INDICATE LOCATION(S) OF ADDITIONAL ACCESSIBLE EQUIPMENT PERFORMING IDENTICAL FUNCTIONS AS EQUIVALENT FACILITATION FOR SUCH EQUIPMENT.
   - D. THE CLEAR WIDTH OF AISLES SHALL BE 36" MIN. IF SERVING ELEMENTS ON ONLY ONE SIDE, AND 44" MIN. IF SERVING ELEMENTS ON BOTH SIDES. **(CBC SEC. 11B-403.5.1, EXCEPTIONS 4)**

2. **ACCESSIBILITY FEATURES SHALL BE DEMONSTRATED AS FOLLOWS (ON PLANS, ELEVATIONS, SECTIONS, AND DETAILS):**
   - A. A CLEAR FLOOR SPACE OF 30"x48" MIN. POSITIONED FOR A FORWARD APPROACH, SHALL BE PROVIDED AT EACH ACCESSIBLE SINK, BUILT-IN DINING AND WORK SURFACE AND SHALL HAVE SLOPES NOT STEEPER THAN 1:48. **(CBC SEC. 11B-305.2, 11B-305.3, AND 11B-902.2)**
   - B. THE TOP OF DINING / WORK SURFACE SHALL BE 28" MIN. AND 34" MAX. A.F.F. **(CBC SEC. 11B-902.3)**
   - C. TOE CLEARANCE SHALL EXTEND 19" TO 25" UNDER ACCESSIBLE SINKS, BUILT-IN DINING AND WORK SURFACES. KNEE CLEARANCES SHALL EXTEND 19" DEEP MIN. AT 27" ABOVE FINISH FLOOR OR GROUND UNDER DINING AND WORK SURFACES. **(CBC SEC. 11B-306.2.3, EXCEPTIONS 1 AND 2, 11B-306.3.3 FOR SINKS AND 11B-306.3.3, EXCEPTION 2 FOR NING AND WORK SURFACES)**
   - D. AT LEAST ONE ACCESSIBLE ROUTE SHALL CONNECT ALL ACCESSIBLE SPACES AND ELEMENTS, SUCH AS BUILT-IN ACCESSIBLE WORKSTATIONS, EQUIPMENT, TABLES, SHELVES, HOOKS, SINKS, ETC. **(CBC SEC. 11B-206.2.4)**
   - E. OPERABLE PARTS OF ALL ACCESSIBLE ELEMENTS SHALL BE PLACED WITHIN THE ACESSIBLE REACH RANGES WITH OR WITHOUT OBSTRUCTIONS. **(CBC SEC. 11B-308 AND 11B-309.3)**

3. **THE FOLLOWING NOTES AND DETAILS ARE PROVIDED:**
   - A. ALL DIMENSIONS FOR ACCESSIBLE CLEARANCES ARE TO FACE OF FINISH UNLESS OTHERWISE NOTED.
   - B. AREAS WITH FLOOR DRAINS AND SINKS SHALL HAVE SLOPES NOT STEEPER THAN 1:48 IN ALL DIRECTIONS.
   - C. FLOOR SINKS OR DRAINS OR TROUGHS EXPOSED TO P.O.T. OR TO PEDESTRIAN CIRCULATION PATHS SHALL HAVE 1/2" MAX. GRATE OPENINGS IN ALL DIRECTIONS. **(CBC SEC. 11B-302.3)**
   - D. OPERABLE PARTS OF ALL THE ACCESSIBLE ELEMENTS SHALL BE OPERABLE WITH ONE HAND AND SHALL NOT REQUIRE TIGHT GRASPING, PINCHING, OR TWISTING OF THE WRIST. THE FORCE REQUIRED TO ACTIVATE OPERABLE PARTS SHALL BE 5 POUNDS MAX. **(CBC SEC. 11B-205 AND 11B-309.4)**
   - E. OPERABLE PARTS OF ALL ACCESSIBLE ELEMENTS SHALL BE PLACED WITHIN ACCESSIBLE REACH RANGES PER THE FOLLWING DETAILS:

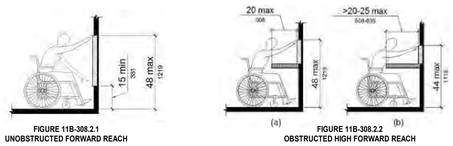

FIGURE 11B-308.2.1
UNOBSTRUCTED FORWARD REACH

FIGURE 11B-308.2.2
OBSTRUCTED HIGH FORWARD REACH

FIGURE 11B-308.3.1
UNOBSTRUCTED SIDE REACH

FIGURE 11B-308.3.2
OBSTRUCTED HIGH SIDE REACH

ACCESSIBILITY DESIGNATION FOR EACH TYPE OF EQUIPMENT:

AC: ACCESSIBLE — AC #

NAC: NON ACCESSIBLE BUT (EF #) WITH EQIVALENT FACILITION — NAC (EF #)

EF: EQUIVLAENT FACILITATION — EF #

NAC: NOT REQUIRED TO BE ACCESSIBLE — NAC #

FOR EACH TYPE OF **NAC** EQUIPMENT, IN EACH ROOM OR SPACE OF FACILITES TO BE ACCESSIBLE, THERE SHALL BE AT LEAST 5%, BUT NO FEWER THAN ONE, OF **EF** EQUIPMENT WITH AN EQUIPMENT ITEM NUMBER. EACH TYPE OF **NAC** EQUIPMENT HAS AN A DESIGNATED **EF** AND ITEM NUMBER

FOR EACH TYEP OF **NAC** EQUIPMENT WITHOUT AN **EF** DESIGNATION AND ITEM NUMBER NEXT TO IT IS NOT REQUIRED TO BE ACCESSIBLE

EACH **EF** AND **AC** EQUIPMENT MUST BE ON AN ACCESSIBLE ROUTE AND COMPLY WITH ALL OF THE ACCESSIBILITY COMMENTS ABOVE

SEE SPEC AND CUT SHEETS FOR ALL EQUIPMENT

ACCESSIBILITY NOTES:

A. ALL DIMENSIONS FOR ACCESS COMPLIANCE ARE TO FACE OF FINISH UNLESS OTHERWISE NOTED.

B. AREAS WITH FLOOR DRAINS AND SINKS SHALL HAVE SLOPES NOT STEEPER THAN 1:48 IN ALL DIRECTIONS.

C. FLOOR SINKS OR DRAINS OR TROUGHS EXPOSED TO P.O.T. OR TO PEDESTRIAN CIRCULATION PATHS SHALL HAVE 1/2" MAX. GRATE OPENINGS IN ALL DIRECTIONS (CBC SEC. 11B-302.3)

D. OPERABLE PARTS OF ALL ACCESSIBLE ELEMENTS SHALL BE OPERABLE WITH ONE HAND AND SHALL NOT RQUIRE TIGHT GRASPING , PINCHING OR TWISTING OF THE WRIST. THE FORCE REQUIRED TO ACTIVE OPERABLE PARTS SHALL BE 5 POUNDS MAX. (CBC SEC. 11B-205 AND 11B-309.4)

E. OPERABLE PARTS OF ALL ACCESSIBLE ELEMENTS SHALL BE PLACED WITHIN ACCESSBIBLE REACH RANGES.

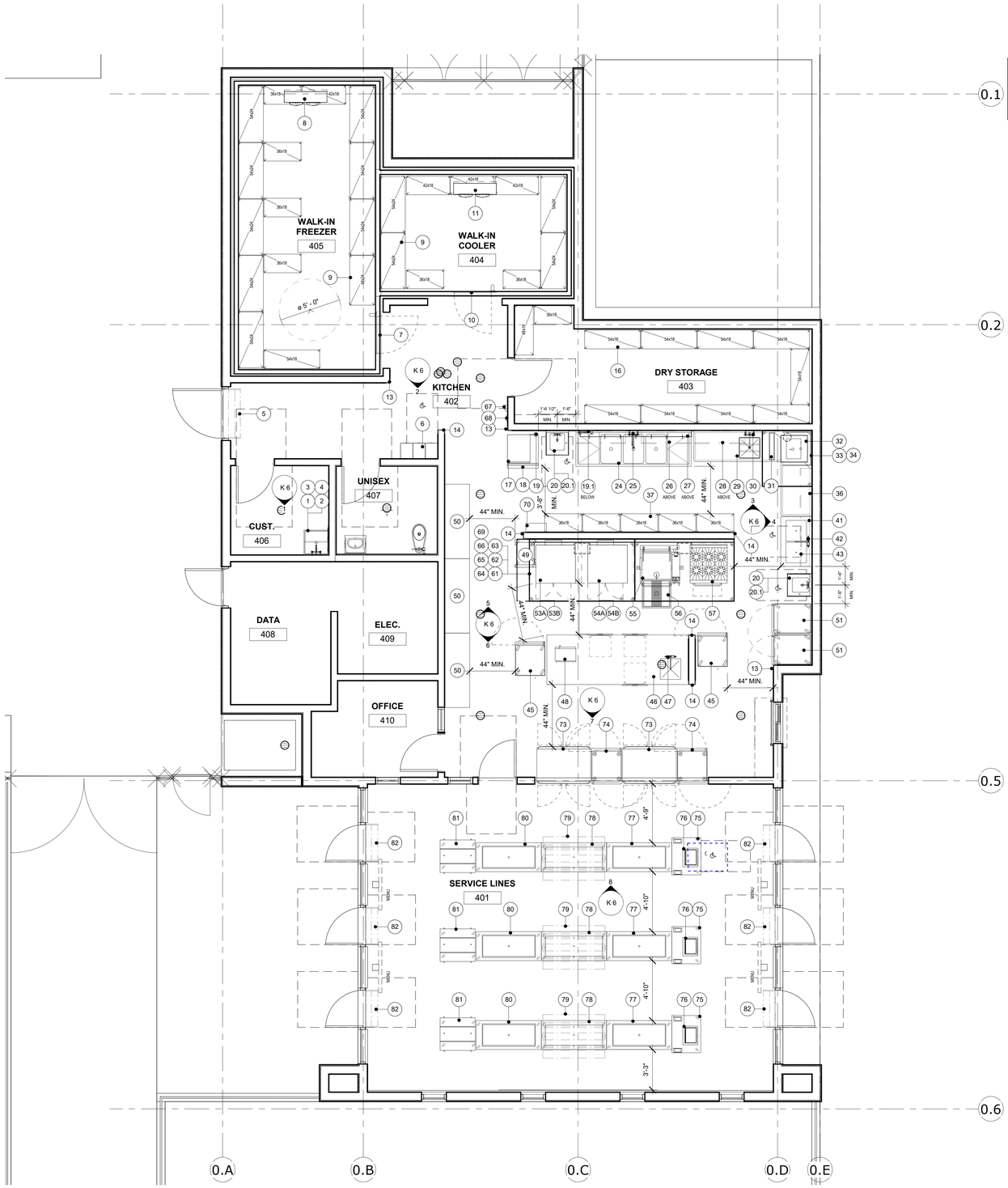

KITCHEN FLOOR PLAN
1/4" = 1'-0"

NOTE:
EQUIPMENT TAG CORRESPONDS TO EQUIPMENT SCHEDULE ON SHEET K 2.

NOTE:
KITCHEN & PREP AREAS ARE COMPLETELY ENCLOSED. ANY AND ALL WINDOWS IN KITCHEN, & PREP AREAS ARE NON-OPERABLE AND ALL DOORS ARE SELF-CLOSING AND TIGHT FITTING

STAMPS

LICENSED ARCHITECT — ROGER CLARKE — No. C-21345 — Exp. 12-31-2023 — STATE OF CALIFORNIA

IDENTIFICATION STAMP
DIV. OF THE STATE ARCHITECT
APP: 04-120895 INC:
REVIEWED FOR
SS ☑ FLS ☑ ACS ☑
DATE: 06/27/2022
ADD
FOR

ORNESS DESIGN GROUP INC
FOODSERVICE DESIGN
5955 MIRA MESA BLVD.
SUITE H
SAN DIEGO, CA. 92121
(858) 457-5955

CONSULTANT BRANDING

RUHNAU CLARKE ARCHITECTS

GHS KITCHEN & WEIGHTROOM MOD: MARCH 1st DSA Submittal:

PROJECT No. :1-30-55
6/20/2022 10:04:58 AM

DRAWN BY: CHECKED BY:

ISSUE No.	DATE	DESCRIPTION
ISSUE No.	DATE	DESCRIPTION
ISSUE No.	DATE	DESCRIPTION
ISSUE No.	DATE	DESCRIPTION

REVISION No.	DATE	DESCRIPTION
REVISION No.	DATE	DESCRIPTION
REVISION No.	DATE	DESCRIPTION
REVISION No.	DATE	DESCRIPTION

RUHNAUCLARKE.COM
3775 TENTH STREET, RIVERSIDE CALIFORNIA 92501 (951) 684 4664 / 5751 PALMER WAY, SUITE C, CARLSBAD CALIFORNIA 92010 (760) 438 5899

GHS KITCHEN & WEIGHTROOM MOD: MARCH 1st DSA Submittal
GROSSMONT HIGH SCHOOL
1100 MURRAY DR, EL CAJON, CA 92020

FOODSERVICE FLOOR PLAN

K 1

1-30-55

C.F.C.I. = CONTRACTOR FURNISH CONTRACTOR INSTALL
D.F.C.I. = DISTRICT FURNISH CONTRACTOR INSTALL
D.F.D.I.= DISTRICT FURNISH DISTRICT INSTALL

LICENSED ARCHITECT ROGER CLARKE No. C-21340 Exp. 10-31-23 STATE OF CALIFORNIA

IDENTIFICATION STAMP
DIV. OF THE STATE ARCHITECT
APP: 04-120895 INC:
REVIEWED FOR
SS ☑ FLS ☑ ACS ☑
DATE: 06/27/2022

STAMPS

ORNESS DESIGN GROUP INC
FOODSERVICE DESIGN
5955 MIRA MESA BLVD.
SUITE H
SAN DIEGO, CA, 92121
(858) 457-5955

CONSULTANT BRANDING

RUHNAU CLARKE ARCHITECTS

EQUIPMENT SCHEDULE

ITEM #	QTY	EQUIPMENT CATEGORY	MANUFACTURER	MODEL	AMPS	HP	VOLTS	PHASE	CONNECTION	COLD WATER SIZE (IN)	HOT WATER SIZE (IN)	DIRECT DRAIN SIZE (IN)	INDIRECT DRAIN SIZE (IN)	GAS SIZE (IN)	BTU/H	EQUIPMENT REMARKS	WEIGHTS (LBS.)	C.F.C.I.	D.F.C.I.	D.F.D.I.	SEISMIC DETAILS K 7.3 & K 7.4
1	1	MOP SINK, FLOOR MOUNTED (24"x24"x12")										3"				(PROVIDED & INSTALLED BY PLUMBING CONTRACTOR) NON-POROUS CONSTRUCTION. DRAIN DIRECTLY TO GREASE TRAP		X			
2	1	MOP SINK FAUCET								1/2"	1/2"					W/ INTEGRAL ATMOSPHERIC VACUUM BREAKER (PROVIDED & INSTALLED BY PLUMBER). G.C. TO PROVIDE WALL BACKING FOR SUPPORT		X			
3	1	RACK, BRUSH/BROOM	T&S BRASS	B-0653												STEEL TYPE, PROVIDED BY K.E.C.		X			
4	1	WALL STORAGE WALL SHELF	BY NSF FABRICATOR													STAINLESS STEEL. G.C. TO PROVIDE WALL BACKING FOR SUPPORT.	12 L/F	X			17
5	1	AIR CURTAIN	MARS AIR	LPN248-1UA-OB	5.1 A	1/6	115 V	1	DIRECT							ACTIVATED VIA MICRO-SWITCH WHEN DOOR IS OPENED	40	X			6
6	3	EMPLOYEE LOCKERS	SALSBURY INDUSTRIES	62165GY-U												MIN. (1) TO BE ACCESSIBLE.	60		X		
7	1	WALK-IN FREEZER w/ LIGHTS	ARTIC		2 A		120 V	1	DIRECT							U.L. LISTED PRE-FABRICATED INSULATED WALL PANELS W/ NSF APPROVED FINISH	2,857	X			20
8	1	WALK-IN FREEZER EVAPORATOR COIL (FAN) W/KE2 CONTROL	RDT	BEL0155	13.7 A		208 V	3	DIRECT				3/4"			VERIFY LOCATION & UTILITIES. INCLUDE TIME CLOCK FOR AIR DEFROST. DRAINS TO FLOOR SINK. SEE DETAILS SHEET FOR INFO.	78	X			
9	24	WIRE SHELVING, FREESTANDING	METRO													w/ 6" NSF CASTERS. NSF APPROVED FINISH.			X		CASTERS
10	1	WALK-IN COOLER w/ LIGHTS	ARTIC		2 A		120 V	1	DIRECT							U.L. LISTED PRE-FABRICATED INSULATED WALL PANELS W/ NSF APPROVED FINISH	2,857	X			20
11	1	WALK-IN COOLER EVAPORATOR COIL (FAN) W/KE2 CONTROL	RDT	BEL0095	1.8 A		115 V	1	DIRECT				3/4"			VERIFY LOCATION & UTILITIES. DRAINS TO FLOOR SINK. SEE DETAILS SHEET FOR INFO.	51	X			
12	1	REFRIGERATION RACK	RDT	ZS1-02Z-CT3-AST	30.6 A		208 V	3	DIRECT							VERIFY LOCATION. K.E.C. TO RUN REFRIGERATION LINESETS TO EQUIPMENT. E.C.'S TO PROVIDE POWER AND CONTROL WIRING TO EQUIPMENT. ROOF CURB/CAP, PENETRATIONS & WATERPROOFING BY G.C.	535	X			
13	3	CORNER GUARDS, L-SHAPE														STAINLESS STEEL. AT ALL EXPOSED KITCHEN CORNERS.		X			
14	5	CORNER GUARDS, U-SHAPE														STAINLESS STEEL. AT ALL EXPOSED KITCHEN CORNERS.		X			
15	1	SPARE NUMBER																			
16	11	DRY SHELVING, FREESTANDING	METRO													w/ 6" NSF CASTERS. NSF APPROVED FINISH.			X		CASTERS
17	1	ICE MACHINES	HOSHIZAKI	KM-520MAJ	10.6 A		115 V	1	DIRECT	1/4"			3/4"			SELF-CONTAINED. AIR-COOLED. DRAINS TO FLOOR SINK.	175				11
18	1	BIN, ICE	HOSHIZAK	B-500SF									3/4"			DRAINS TO FLOOR SINK	140				
19	1	WATER FILTER, ICE	3M	HF160-CLS						1/2"						G.C.'S PLUMBING SUB TO ROUTE CONCEALED PIPING UNDERGROUND OR OVERHEAD TO ITEM #17. WALL BAKING BY G.C.		X			
19.1	1	BACKFLOW PREVENTOR	BY PLUMBER							3/4"			1/2"			DRAINS TO FLOOR SINK. PROVIDED & INSTALLED & CERTIFIED BY G.C.'S PLUMBING SUB. ROUTE PIPING CONCEALED TO FILTER ITEM #19.		X			
20	2	HAND SINK, WALL MOUNT	JOHN BOOS	PBHS-ADA-P-STD-SSLR								1 1/2"				STAINLESS STEEL. 16"x17"x6"D. PROVIDE 6" STAINLESS STEEL SPLASHGUARD AS REQUIRED	35	X			2
20.1	2	FAUCET, ELECTRIC	T&S BRASS	EC-3105-HG			120 V	1	5-15P	1/2"	1/2"					USED FOR HAND SINK		X			
21	1	SPARE NUMBER																			
22	1	SPARE NUMBER																			
23	1	SPARE NUMBER																			
24	1	3 - COMPARTMENT SINK	BY NSF FABRICATOR										3"			20"x28"x14"D., W/ INTEGRATED 18" MIN. DRAINBOARD EACH SIDE AND 8" BACKSPLASH. DRAINS TO FLOOR SINK (FLOOR SINK TO HAVE 3" TRAPPED DRAIN)	24 L/F	X			2
25	1	PRE-RINSE FAUCET, BACKSPLASH MOUNT	FISHER	68195						1/2"	1/2"							X			
26	2	WALL STORAGE WALL SHELF	BY NSF FABRICATOR													G.C. TO PROVIDE WALL BACKING FOR SUPPORT	12 L/F	X			17
27	1	POT RACK, STAINLESS STEEL	BY NSF FABRICATOR													G.C. TO PROVIDE WALL BACKING FOR SUPPORT	12 L/F	X			17
28	1	WALL STORAGE WALL SHELF	BY NSF FABRICATOR													G.C. TO PROVIDE WALL BACKING FOR SUPPORT	12 L/F	X			17
29	1	SOILED DISH TABLE w/ SCRAPPED SINK	BY NSF FABRICATOR										1"			STAINLESS STEEL. DRAINS TO FLOOR SINK.	24 L/F	X			2
30	1	PRE-RINSE FAUCET, BACKSPLASH MOUNT	FISHER	67997						1/2"	1/2"							X			
31	1	QUICK DRAIN	BY NSF FABRICATOR										1/2"			DRAINS TO FLOOR SINK		X			
32	1	WAREWASHER, DOOR TYPE, HIGH TEMP w/ BOOSTER	HOBART	AM16T-BAS-2	52.5 A		208 V	3	DIRECT	1/2"	3/4"		1 1/2"			DRAINS TO FLOOR SINK NOT CONNECTED TO GREASE INTERCEPTOR PER 2019 CPC	357	X			
33	1	TYPE-II STEAM EXHAUST HOOD	CAPTIVE AIRE	5424 VHB-G-REM1												CONSTRUCTED & INSTALLED PER U.L. 710 SPECIFICATIONS.	184	X			13
34	1	EXHAUST FAN					208 V	1	DIRECT							VERIFY LOCATION. SEE MECHANICAL DWGS FOR SPECIFICATIONS		X			
35	1	SPARE NUMBER																			
36	1	DISH TABLE, CLEAN	BY NSF FABRICATOR													STAINLESS STEEL	24 L/F	X			2
37	5	POT SHELVING, FREESTANDING	METRO													w/ 6" NSF CASTERS. NSF APPROVED FINISH.			X		CASTERS
38	1	SPARE NUMBER																			
39	1	SPARE NUMBER																			
40	1	SPARE NUMBER																			
41	1	PREP TABLE w/ DOUBLE PREP SINK, ADA	BY NSF FABRICATOR	HUD #72541-01									1"			STAINLESS STEEL. 20"X20"x6"D BOWL. DRAINS TO FLOOR SINK.	24 L/F	X			2
42	1	FAUCET	FISHER	57665						1/2"	1/2"					USED FOR PREP SINK		X			
43	1	WALL STORAGE WALL SHELF	BY NSF FABRICATOR													G.C. TO PROVIDE WALL BACKING FOR SUPPORT	12 L/F	X			17
44	1	SPARE NUMBER																			
45	2	INSULATED HOT CABINET, MOBILE	CRES COR	H-137-SUA-12D	12 A		120 V	1	5-15P							ON LOCKING CASTERS	360			X	CASTERS
46	1	ISLAND PREP TABLE w/ INTEGRAL PREP SINK	BY NSF FABRICATOR										1"			STAINLESS STEEL. 20"x20"x12"D BOWL. MEETS EHP-883. DRAINS TO FLOOR SINK.	24 L/F	X			1
47	1	FAUCET	FISHER	57665						1/2"	1/2"					USED FOR PREP SINK		X			
48	1	COMMERCIAL MICROWAVE OVEN	PANASONIC	NE-1054F	13.4 A		120 V	1	5-15P								40			X	
49	1	RACK, PAN	GSW USA	AAR-2022W													38			X	CASTERS
50	3	WORK TABLE	JOHN BOOS	ST4-2472SSK												STAINLESS STEEL. ON LOCKING CASTERS.	125		X		CASTERS
51	2	COOK & HOLD QUIKTHERM, MOBILE	CRES COR	RO-151-FW-UA-18D	30 A		208 V	3	6-50P							ON LOCKING CASTERS	392			X	CASTERS
52	1	SPARE NUMBER																			
53A	1	CONVECTION OVEN, GAS	BLODGETT	ZEPHAIRE-200-G-ES	8 A	3/4	115 V	1	5-15P					3/4"	50,000 Btu/h		596		X		11
53B	1	CONVECTION OVEN, GAS	BLODGETT	ZEPHAIRE-200-G-ES	8 A	3/4	115 V	1	5-15P					3/4"	50,000 Btu/h	ON LEGS	596		X		11
54A	1	CONVECTION OVEN, GAS	BLODGETT	ZEPHAIRE-200-G-ES	8 A	3/4	115 V	1	5-15P					3/4"	50,000 Btu/h		596		X		11
54B	1	CONVECTION OVEN, GAS	BLODGETT	ZEPHAIRE-200-G-ES	8 A	3/4	115 V	1	5-15P					3/4"	50,000 Btu/h	ON LEGS	596		X		11
55	1	TILTING SKILLET, GAS	GROEN	BPM-30GC	5 A		115 V	1	DIRECT	1/2"	1/2"			1/2"	104,000 Btu/h	30 GALLONS	586		X		7
56	1	FLOOR TROUGH	BY NSF FABRICATOR	HUD #72541-01								2"				TOP OF DRAIN COVER MUST BE LEVEL WITH FINISH FLOOR AND OPENING 1/2" MAX.		X			
57	1	6-BURNER RANGE w/ CONVECTION OVEN, GAS	MONTAGUE	V136-5	3.4 A		120 V	1	5-15P					1"	220,000 Btu/h	ON LEGS	710		X		7
58	1	SPARE NUMBER																			
59	1	SPARE NUMBER																			
60	1	SPARE NUMBER																			
61	1	TYPE-I GREASE EXHAUST HOOD w/ LIGHTS	CAPTIVE AIRE	6024 ND-2	5 A		120 V	1	DIRECT							CONSTRUCTED & INSTALLED PER U.L. 710 SPECIFICATIONS.	1,476	X			13
62	1	EXHAUST FAN				3	460 V	3	DIRECT							VERIFY LOCATION. SEE MECHANICAL DWGS FOR SPECIFICATIONS		X			
63	1	MAKE-UP AIR				5	460 V	3	DIRECT							VERIFY LOCATION. SEE MECHANICAL DWGS FOR SPECIFICATIONS		X			
64	1	STAINLESS STEEL WALL PANELS														FROM TOP OF COVE BASE TO BOTTOM OF HOOD		X			
65	1	QUICK GAS DISCONNECT	T&S BRASS													QUICK GAS CONNECTORS TO COMPLY WITH ANSI Z21.69		X			
66	1	FIRE SUPPRESSION SYSTEM; ANSUL AUTOMAN	ANSUL	R-102	4.3 A	3	460 V	3	DIRECT							SEE MECH. DWGS. MICROSWITCH TO MUA & UTILITIES AT HOOD. FIRE SUPPRESSION SYSTEM TO BE SUBMITTED WITH FIRE PROTECTION COMPANY UNDER SEPARATE PERMIT. AN AUTOMATIC EXTINGUISHING SYSTEM SHALL BE PROVIDED COMMERCIAL-TYPE FOOD HEATING EQUIPMENT THAT PRODUCES GREASE-LADEN VAPORS AND SHALL COMPLY WITH 2019 CFC, CMC AND 2017 NFPA 17A.		X			
67	1	REMOTE PULL STATION FOR FIRE SUPPRESSION SYSTEM														FURNISHED & INSTALLED BY K.E.C. OCTAGONAL JUNCTION BOX ROUGHED-IN BY E.C.		X			
68	1	K-TYPE FIRE EXTINGUISHER, RECESSED														PROVIDED BY K.E.C. INSTALLED BY G.C., TO BE LOCATED IN KITCHEN AREA PER FIRE INSPECTOR (CFS 904.11)		X			
69	1	GAS SHUT OFF VALVE			2 A		120 V	1	DIRECT							KEC TO PROVIDE GAS SHUT OFF VALVE, INSTALLED BY PLUMBER		X			
70	1	WALL MOUNTED CONTROL CABINET	CAPTIVE AIRE	DCV-1011												SMART CONTROLS THERMOSTATIC CONTROL w/ RELAY ON/OFF w/ SUPPLY		X			
71	1	SPARE NUMBER																			
72	1	SPARE NUMBER																			
73	2	REFRIGERATOR, PASS-THRU	VICTORY	RS-2D-S1-PT-HC	8.5 A	1/3	115 V	1	5-15P							SELF-CONTAINED. ON LEGS	525		X		8
74	2	CABINET, WARMING & HOLDING, PASS-THRU	CRES COR	H-137-PSUA-12D	16 A		120 V	1	5-20P							ON LEGS	400		X		8
75	3	P.O.S. CART	GA SYSTEMS	D3136A												ON LOCKNG CASTERS			X		CASTERS
76	3	P.O.S. & CARD READER			5 A		120 V	1	+DATA							PROVIDE FOR CAT V CABLE AND PHONE				X	
77	3	SERVING CART, COLD	GA SYSTEMS	C5	5.5 A		120 V	1	5-15P							ON LOCKING CASTERS	350		X		CASTERS
78	3	SERVING CART, HOT	GA SYSTEMS	H5	22 A		120 V	1	5-30P							ON LOCKING CASTERS	350		X		CASTERS
79	3	DOUBLE SIDED SNEEZE GUARD, SELF-SERVE	GA SYSTEMS													w/ STAINLESS STEEL POSTS & TEMPERED GLASS. SEE ELEVATIONS FOR DESIGN. MEETS EHP-883.			X		
80	3	SERVING CART, COLD	GA SYSTEMS	C5	5.5 A		120 V	1	5-15P							ON LOCKING CASTERS	350		X		CASTERS
81	3	MILK COOLER	BEVERAGE AIR	ST34HC-S	4 A	1/4	115 V	1	5-15P							SELF-CONTAINED. ON LOCKING CASTERS.	240		X		CASTERS
82	6	AIR CURTAIN	MARS AIR	LPN236-1UA-OB	5.1 A	1/6	115 V	1	DIRECT							ACTIVATED VIA MICRO-SWITCH WHEN DOOR IS OPENED	32	X			6

EQUIPMENT MANUFACTURER & MODEL NUMBER ARE FOR REFERENCE ONLY. VERIFY ACTUAL EQUIPMENT MANUFACTURER & MODEL NUMBER WITH KITCHEN EQUIPMENT CONTRACTOR'S SUBMITTAL PACKAGE (SPECIFICATIONS & CUT-SHEETS)

ALL FOOD-RELATED & UTENSIL-RELATED EQUIPMENT SHALL MEET OR BE EQUIVALENT TO SANITATION STANDARDS ESTABLISHED BY AN AMERICAN NATIONAL STANDARDS INSTITUTE (ANSI) ACCREDITED PROGRAM

ELECTRICAL NOTES

1. ALL ELECTRICAL OUTLETS AND CONNECTIONS SHOWN ON THIS PLAN ARE FOR EQUIPMENT SHOWN ON FOOD SERVICE EQUIPMENT PLAN ONLY. SEE ELECTRICAL PLANS, NOTES, AND SCHEDULES (WHERE PROVIDED) FOR ADDITIONAL INFORMATION. SEE ELECTRICAL PLANS.
2. ELECTRICAL CONTRACTOR TO VERIFY INCOMING SERVICE, TO PROVIDE FINAL CONNECTIONS TO ALL APPLICABLE FOOD SERVICE EQUIPMENT AND TO PROVIDE ALL SWITCHES, BREAKERS, CONDUIT, STARTERS, ETC., UNLESS SPECIFICALLY STATED OTHERWISE.
3. ELECTRICAL CONTRACTOR TO PROVIDE ALL JUNCTION BOXES, OUTLETS, AND RECEPTACLES IN FIXTURES. FABRICATOR TO LOCATE ALL RECEPTACLES AND SWITCHES WHEN PART OF FIXTURE'S INTERNAL WIRING.
4. ALL HORIZONTAL DIMENSIONS SHOWN ARE FROM FINISHED FACE OF WALL TO CENTER LINE OF OUTLET, UNLESS OTHERWISE NOTED ON PLANS OR DETAILS.
5. ALL OUTLET LOCATIONS NOTED +12, +18, ETC. INDICATE HEIGHT FROM FINISHED FLOOR TO CENTER LINE OF OUTLET, NOT FROM FINISHED CURB.
6. ELECTRICAL CONTRACTOR TO PROVIDE APPROPRIATE LENGTH PIGTAIL FLEX CONDUIT AT ALL DIRECT CONNECT STUB-OUTS, AND CONNECT TO FIXTURES.
7. ELECTRICAL CONTRACTOR TO PROVIDE & WIRE ALL MAGNETIC CONNECTORS REQUIRED FOR POWER SHUT-OFF AT ALL POWERED COOKING EQUIPMENT AND ALL ELECTRICAL OUTLETS UNDER GREASE EXHAUST HOOD. CONNECT 115 VOLT CONTROL CIRCUIT FROM FIRE SUPPRESSION SYSTEM MICROWSWITCHES SYSTEM, MOUNT TO HOLDING COIL OF CONNECTORS.
8. ELECTRICAL CONTRACTOR TO COORDINATE WITH MECHANICAL AND CONTROLS CONTRACTORS, AND PROVIDE/INSTALL RELAYS, STARTER MOTORS, & WIRING REQUIRED TO ENERGIZE GREASE EXHAUST FANS(S) AND SHUT OFF AIR SUPPLY FAN(S) TO THE AFFECTED KITCHEN ZONE(S) DURING A FIRE SUPPRESSION SYSTEM ACTIVATION. SEE ELECTRICAL & MECHANICAL PLANS, AND FIRE SUPPRESSION SYSTEM SHOP DRAWINGS.
9. ELECTRICAL CONTRACTOR TO PROVIDE A MINIMUM OF THREE (3) WIRES PLUS GROUND ON ALL 208 OR 230 VOLT CIRCUITS. SEE ELECTRICAL PLANS.
10. ELECTRICAL CONTRACTOR TO PROVIDE AND INSTALL STAINLESS STEEL COVER PLATES FOR ALL RECEPTACLES AND SWITCHES FOR FOOD PREPARATION AREAS UNLESS NOTED OTHERWISE. RECEPTACLES TO BE SET HORIZONTALLY WHERE NOTED OR REQUIRED DUE TO SPACE CONSTRAINTS (I.E. BAR DIE WALLS).
11. ELECTRICAL CONTRACTOR TO COMPLETE ALL NECESSARY FORMS TO SATISFY TITLE 24 BUILDING DEPARTMENT REQUIREMENTS.
12. ELECTRICAL CONTRACTOR TO PROVIDE NEW ELECTRICAL PANEL, IF NECESSARY AND PROVIDE ELECTRICAL RUN SIZES, WIRING, ETC., PER BUILDING DEPT. REQUIREMENTS.
13. ELECTRICAL CONTRACTOR TO PROVIDE ELECTRICAL FOR WALK-IN FREEZER AND COOLER, VERIFY LOCATION AND POWER REQUIRED.
14. ELECTRICAL CONTRACTOR TO INSTALL HOOD LIGHTING, INTERCONNECT LIGHTS IF MORE THAN ONE PROVIDED AND MAKE FINAL CONNECTION.
15. ELECTRICAL CONTRACTOR TO PROVIDE CONVENIENCE OUTLETS WHERE APPLICABLE PER CODES AND OWNER'S REQUIREMENTS. SEE ELECTRICAL PLANS.
16. ELECTRICAL CONTRACTOR TO CONTACT CLIENT REGARDING ELECTRICAL INFORMATION AND LOCATION FOR: SOUND SYSTEMS; CASH REGISTERS; TELEPHONE SYSTEMS; OR ANY OTHER FIXTURES NOT RELATED TO FOOD SERVICE EQUIPMENT PROVIDED.
17. ELECTRICAL CONTRACTOR TO INSTALL ALL KITCHEN EQUIPMENT CONTROL PANELS. PROVIDE ALL WIRING CONNECTION BETWEEN EQUIPMENT AND CONTROL PANEL (SEE FOOD SERVICE PLANS FOR ITEMS THAT ARE EQUIPPED WITH SEPARATE CONTROL PANEL).
18. ELECTRICAL CONTRACTOR TO PROVIDE AND INSTALL 4" OCTAGON FIRE SUPPRESSION PULL STATION TO BE MOUNTED 48" FROM FINISHED FLOOR AT EGRESS EXIT WITH 1/2" CONDUIT (SEE DETAIL). ELECTRICAL CONTRACTOR TO PROVIDE AND INSTALL ELECTRICAL MAGNETIC CONNECTED TO FIRE PROTECTION SYSTEM TO SHUT-OFF ALL ELECTRICAL COOKING EQUIPMENT AND ELECTRICAL OUTLETS BELOW EXHAUST HOOD(S).
19. ELECTRICAL CONTRACTOR TO REVIEW K.E.C. ELECTRICAL ROUGH-IN SHOP DRAWING SUBMITTALS AND VERIFY ALL LOADS & CONNECTIONS.
20. WHERE ANY PLANS OR SPECIFICATIONS ARE INCOMPLETE, AMBIGUOUS, OR CONTAIN CONFLICTING INSTRUCTIONS THE ELECTRICAL CONTRACTOR IS RESPONSIBLE TO CONTACT THE K.E.C. FOR CLARIFICATION BEFORE PROCESSING.
21. CONDUIT RUNS ON PLAN FOR SYRUP LINES, BEER LINES, Co2, GAS LINES, & REFRIGERATION LINES ARE SHOWN ONLY SCHEMATIC: CONDUIT SHALL NOT EXCEED 95 FEET IN LENGTH ON HORIZONTAL OR VERTICAL RUNS, & NO MORE THAN THREE (3) CONDUIT BENDS WITHOUT TERMINATING IN 12"x12"x4" PULL BOX. PULL BOX LOCATIONS SHALL BE ACCESSIBLE FOR A PULLING OF LINES, CONDUIT BENDS MUST HAVE A MINIMUM RADIUS OF 24".
22. ELECTRICAL CONTRACTOR TO INSTALL CONTENTIOUS 5" MINIMUM CONDUIT PER THE FOODSERVICE UNDERGROUND ROUGH-IN DRAWINGS. THE CONDUIT LENGTHS ARE SHOWN BY STUBOUTS ON THE FOODSERVICE DRAWINGS. THE E.C. NEEDS TO REFERENCE ON FOODSERVICE DRAWINGS. LOCATIONS & ESTIMATE LENGTHS OFF THE ARCHITECTURAL PLANS. THE E.C. NEEDS TO VERIFY ROUTING DURING BID TIME. THE MAXIMUM CONDUIT LENGTH TO BE 100; BEFORE 12"x24"x24" PULL BOX AND/OR 4 EACH 90° BENDS.

ELECTRICAL LEGEND

- DUPLEX RECEPTACLE PROVIDED AND INSTALLED BY ELECTRICAL CONTRACTOR. VERIFY PLUG TYPE, PHASE AND VOLTAGE WITH FOOD SERVICE EQUIPMENT SCHEDULE, EQUIPMENT CUT SHEETS, AND ELECTRICAL PLANS. NOTE: AT BAR DIE WALLS, MOUNT RECEPTACLES HORIZONTALLY
- QUADRANT RECEPTACLE PROVIDED AND INSTALLED BY ELECTRICAL CONTRACTOR.
- (J) JUNCTION BOX WALL MOUNTED FLUSH WITH FINISH, U.O.N. PROVIDED AND INSTALLED BY ELECTRICAL CONTRACTOR
- WHP (J) / WHP (J) JUNCTION OR DUPLEX WITH ELECTRICAL WIRE INSTALLED FROM WALL TO BE FINISHED IN CABINET PROVIDED AND INSTALLED BY ELECTRICAL CONTRACTOR
- (J) ELECTRICAL ROUGH-IN TO BE STUBBED UP THRU FLOOR HEIGHT AS SPECIFIED
- DEDICATED ELECT & DATA RECEPTACLE FOR P.O.S. SYSTEM. SEE ELECTRICAL PLANS.
- WATERPROOF GROUND BOX FLUSH MOUNTED IN SLAB WITH COVER PLATE, FOR DEDICATED ELECT. & DATA FOR P.O.S. SYSTEM. SEE ELECTRICAL PLANS.
- TELEPHONE JACK/DATA LINE PROVIDED AND INSTALLED BY ELECTRICAL CONTRACTOR.
- (C) CONVENIENCE DUPLEX RECEPTACLE PROVIDED AND INSTALLED BY ELECTRICAL CONTRACTOR, 1-PH 120V 15A NEMA 5-15R. SEE ELECTRICAL PLANS. NOTE: AT BAR DIE WALLS, MOUNT RECEPTACLES HORIZONTALLY
- LED LIGHT (IN EXHAUST HOOD OR WALK-IN COOLER) PROVIDED BY MANUFACTURER AND WIRED BY ELECTRICAL CONTRACTOR
- VAPOR PROOF LIGHT (IN EXHAUST HOOD OR WALK-IN COOLER) PROVIDED BY MANUFACTURER AND WIRED BY ELECTRICAL CONTRACTOR
- VAPOR PROOF FLUORESCENT LIGHT FIXTURE (IN EXHAUST HOOD OR WALK-IN COOLER) PROVIDED BY MANUFACTURER, AND INSTALLED/WIRED BY ELECTRICAL CONTRACTOR
- DASHED LINE INDICATES FIELD WIRING BY ELECTRICAL CONTRACTOR. SEE ELECTRICAL DRAWINGS
- EXHAUST VENTILATION PER UMC. ACTIVATED BY LIGHT SWITCH 5 MIN. AIR EXCHANGE FAN/ 12 EXCHANGES PER HOUR
- (S) WALL MOUNTED TOGGLE SWITCH PROVIDED AND INSTALLED BY ELECTRICAL CONTRACTOR. VERIFY TYPE w/ OWNER OR DESIGNER, & SEE ELECTRICAL DRAWINGS.
- REMOTE PULL STATION FOR FIRE SUPPRESSION SYSTEM - PROVIDED AND INSTALLED BY ELECTRICAL CONTRACTOR
- (T) TEMP SENSOR

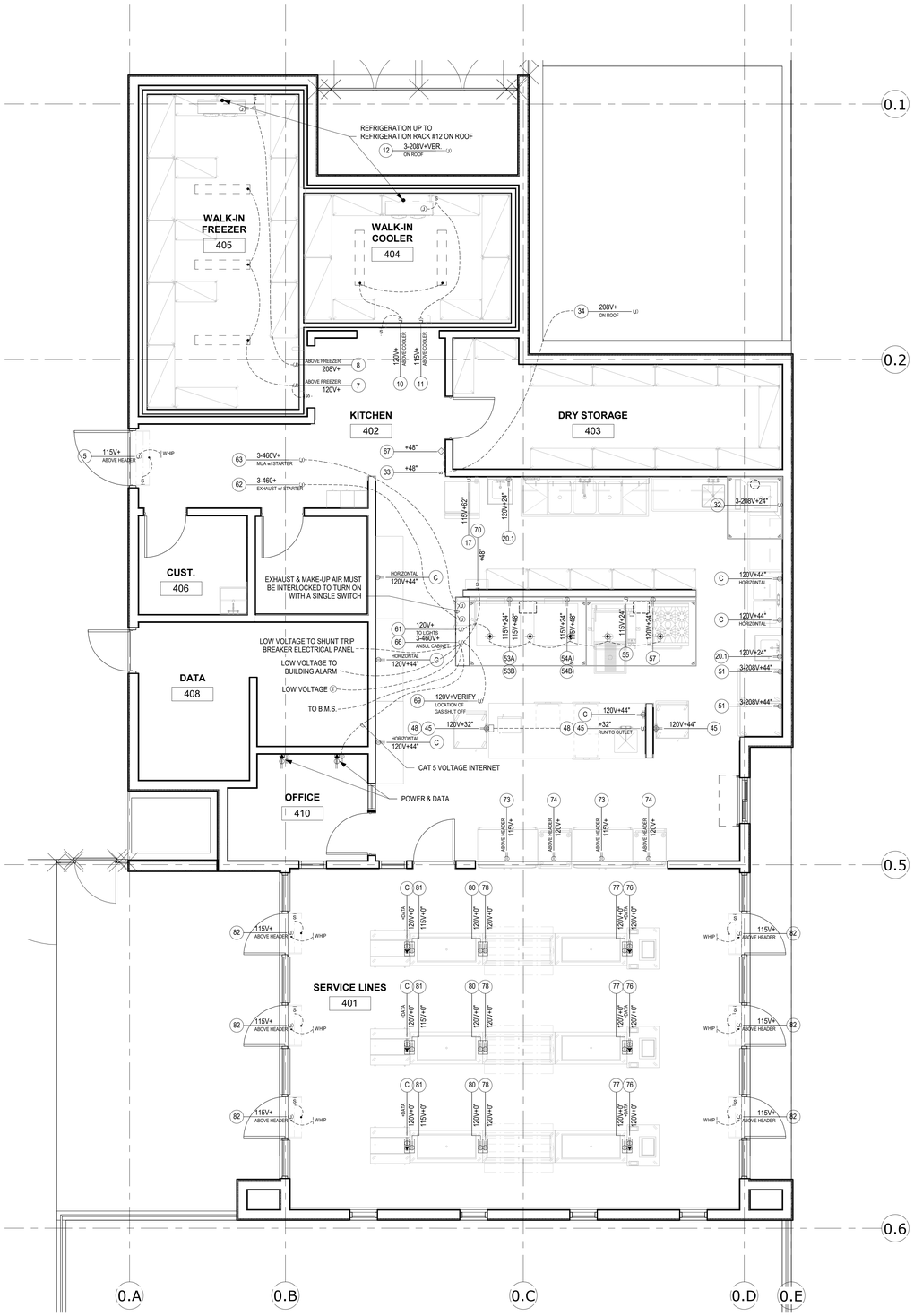

KITCHEN ELECTRICAL ROUGH-INS FLOOR PLAN

1/4" = 1'-0"

STAMPS

IDENTIFICATION STAMP
DIV. OF THE STATE ARCHITECT
APP: 04-120895 INC:
REVIEWED FOR
SS ☑ FLS ☑ ACS ☑
DATE: 06/27/2022

ORNESS DESIGN GROUP INC
FOODSERVICE DESIGN
5955 MIRA MESA BLVD.
SUITE H
SAN DIEGO, CA, 92121
(858) 457-5955

CONSULTANT BRANDING

RUHNAU CLARKE ARCHITECTS

NOTE:
EQUIPMENT TAG CORRESPONDS TO EQUIPMENT SCHEDULE ON SHEET K.2.

1. ELECTRICIAN TO CONNECT TO #66 ANSUL SYSTEM MICROSWITCHES AND PROVIDE SHUNT TRIP BREAKERS, OR CONTRACTORS, AND WIRING TO SHUNT POWER TO ALL RECEPTACLES UNDER #61 TYPE-I EXHAUST HOOD DURING AN ANSUL ACTIVATION. SOME FIRE MARSHALLS MAY WANT HOOD LIGHTING TO BE TURNED OFF IN ADDITION. SEE DETAIL 2/K-7.2
2. SEE ELECTRICAL & MECHANICAL PLANS FOR DIRECTION ON METHOD TO TURN ON/OFF EXHAUST AND SUPPLY FANS DURING ANSUL ACTIVATION. EXTRA MICROSWITCHES IN #66 ANSUL AUTOMAN MANY BE USED FOR THIS PURPOSE. (COORDINATE WITH G.C. FOR SCOPE OF WORK DESIGNATIONS).
3. ELECTRICIAN TO PROVIDE/INSTALL WIRING BETWEEN ANSUL SYSTEMS AND ANSUL ELECTRONIC GAS VALVE, AND TO INSTALL K.E.C. PROVIDED RESET/RELAY. COORDINATE LOCATION.
4. TOTAL EXHAUST CFM & SUPPLY CFM FROM HVAC REGISTER TO EQUAL 100% CFM.

MECHANICAL NOTES & LEGEND

1. SEE (FOODSERVICE) ELECTRICAL, PLUMBING & UNDERGROUND ROUGH-IN DRAWINGS FOR UTILITY ROUGH-IN PLANS AND ADDITIONAL INFORMATION.
2. SEE EXHAUST HOOD PLANS

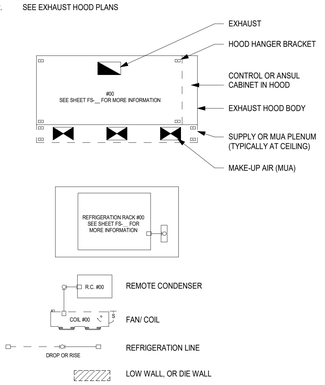

(K.E.C).	= KITCHEN EQUIPMENT CONTRACTOR	(N)	= NEW
(G.C.)	= GENERAL CONTRACTOR	(E)	= EXISTING CONTRACTOR TO VERIFY LOCATION
(P.C.)	= PLUMBING CONTRACTOR		
(M.W.)	= MILLWORK CONTRACTOR	(D)	= DEMO EXITING
(TYP.)	= TYPICAL	(B)	= BEER LINE CONDUIT
(U.O.N.)	= UNLESS OTHERWISE NOTED	(S)	= SODA LINE CONDUIT
(K.E.C.)	= KITCHEN EQUIPMENT CONTRACTOR		

GHS KITCHEN & WEIGHTROOM MOD: MARCH 1st DSA Submittal:

PROJECT No. :1-30-55
6/20/2022 10:05:06 AM

DRAWN BY: CHECKED BY:

ISSUE No.____ DATE____ DESCRIPTION____ REVISION No.____ DATE____ DESCRIPTION____

RUHNAUCLARKE.COM
3775 TENTH STREET, RIVERSIDE CALIFORNIA 92501 (951) 684 4664 / 5751 PALMER WAY, SUITE C, CARLSBAD CALIFORNIA 92010 (760) 438 5899

GHS KITCHEN & WEIGHTROOM MOD: MARCH 1st DSA Submittal
GROSSMONT HIGH SCHOOL
1100 MURRAY DR, EL CAJON, CA 92020

FOODSERVICE
ELECTRICAL ROUGH-INS

K 3

1-30-55

STAMPS

LICENSED ARCHITECT ROGER CLARKE No. C-21345 Exp. 12-31-2023 STATE OF CALIFORNIA

IDENTIFICATION STAMP
DIV. OF THE STATE ARCHITECT
APP: 04-120895 INC:
REVIEWED FOR
SS ☑ FLS ☑ ACS ☑
DATE: 06/27/2022
ACCESSIBILITY
FOR DSA PARTIAL ACCEPTANCE

ORNESS DESIGN GROUP INC
FOODSERVICE DESIGN
5955 MIRA MESA BLVD.
SUITE H
SAN DIEGO, CA. 92121
(858) 457-5955

CONSULTANT BRANDING

RUHNAU CLARKE ARCHITECTS

PLUMBING NOTES

1. ALL PLUMBING INFORMATION AND CONNECTIONS SHOWN ON THIS PLAN ARE FOR EQUIPMENT SHOWN ON FOOD SERVICE EQUIPMENT PLANS ONLY. SEE PLUMBING PLANS FOR ADDITIONAL INFORMATION.
2. PLUMBING CONTRACTOR TO VERIFY ALL INCOMING SERVICE AND MAKE FINAL CONNECTIONS TO ALL APPLICABLE EQUIPMENT, AND TO PROVIDE ALL PIPING, TEES, WELLS, TRAPS, REGULATORS, FILTERS, FAUCETS, BACKFLOW PREVENTERS, ETC., UNLESS OTHERWISE STATED.
3. PLUMBING CONTRACTOR TO PROVIDE AND INSTALL INDIVIDUAL SHUT-OFF VALVES ON ALL WATER, WASTE, AND GAS LINES.
4. ALL FLOOR AND WALL PENETRATIONS MUST BE SEALED WATER-TIGHT AND VERMIN-PROOF, AND PIPE PENETRATIONS IN WALLS AND CABINETS MUST HAVE AN ESCUTCHEON.
5. HORIZONTAL DIMENSIONS SHOWN ARE FROM FINISHED FACE OF WALL TO CENTER LINE OF STUB-OUT OR FROM CENTER LINE OF STUB-OUT TO CENTER LINE OF STUB-OUT, UNLESS NOTED OTHERWISE ON PLAN OR DETAIL (VERIFY ALL DIMENSIONS AT THE JOB SITE).
6. ALL SYMBOLS NOTED +12, +18, ETC., TO STUB-OUT OF WALL AT HEIGHT INDICATED. HEIGHT IS GIVEN FROM FINISHED FLOOR TO CENTER LINE OF STUB-OUT THROUGH FINISHED FLOOR.
7. ALL FLOOR SINKS SHOWN ARE TO BE SET FLUSH WITH FINISHED FLOOR, TRAPPED, AND DRAIN PIPING TO HAVE LEGAL AIR GAP.
8. PLUMBING CONTRACTOR TO PROVIDE AND INSTALL REMOVABLE COVERS OR GRILLS FOR ALL FULLY OR PARTIALLY EXPOSED FLOOR SINKS.
9. PLUMBING CONTRACTOR TO PROVIDE DRAIN LINES WITH LEGAL AIR GAP FROM ALL APPLICABLE EQUIPMENT, INCLUDING ANY REMOTELY REFRIGERATED EQUIPMENT, WALK-IN COOLER & FREEZER EVAP COILS TO HAVE DRAINS WITH VENTED TRAP PER DETAIL.
10. ALL DISH, PAN, AND GLASS WASHERS MUST DRAIN TO A 3" TRAPPED FLOOR SINK, AND DRAIN PIPING TO HAVE LEGAL AIR GAP. FLOOR SINK TO BE 12"x12" MIN. WHERE NOT PROVIDED BY K.E.C., PLUMBING CONTRACTOR TO PROVIDE & INSTALL DRAIN TEMPERING KITS ON DRAINS FROM HIGH TEMP WASHERS WHERE 180°F OR HOTTER WATER IS DRAINED.
11. PLUMBING CONTRACTOR TO PROVIDE PRESSURE REGULATING VALVE FOR DISHWASHER 20 TO 25 PRIG REQUIRED, UNLESS PROVIDED WITH EQUIPMENT.
12. PLUMBING CONTRACTOR TO PROVIDE AND INSTALL PRESSURE REGULATING VALVES AND/OR BACKFLOW PREVENTERS WHERE REQUIRED BY LOCAL CODE.
13. IT IS RECOMMENDED THAT ALL POTABLE WATER LINES HAVE FILTERED WATER. FILTERS TO BE PROVIDED AND INSTALLED BY PLUMBING CONTRACTOR AND/OR OWNER, UNLESS OTHERWISE STATED.
14. IT IS RECOMMENDED THAT THE INLET WATER FOR THE WATER HEATER BE SOFTENED. THIS TO BE PROVIDED AND INSTALLED BY PLUMBING CONTRACTOR AND/OR OWNER.
15. WATER HEATER TO PROVIDE FOR ADEQUATE WATER CONSUMPTION AND BE SIZED BY PLUMBING CONTRACTOR AND/OR PLUMBING ENGINEER TO MEET LOCAL BUILDING AND HEALTH DEPT REQUIREMENTS. VERIFY LOCATION.
16. GAS PIPING TO BE BLACK STEEL PIPE WITH FITTINGS AS REQUIRED BY LOCAL CODE.
17. PLUMBING CONTRACTOR TO PROVIDE & INSTALL A UNION AND SHUT-OFF VALVE AT EACH PIECE OF GAS EQUIPMENT.
18. FLOOR MATERIAL TO SLOPE 1/4" PER FOOT TOWARD FLOOR DRAINS FOR MINIMUM 24" ALL SIDES OF DRAIN PER PLAN. NOTE: WHERE SLAB IS EXISTING, PLUMBING CONTRACTOR IS TO COORDINATE WITH PLUMBING ENGINEER TO LOCATE FLOOR DRAINS TO SLAB LOW POINTS TO ENSURE PROPER DRAINAGE.
19. WATER HEATER/BOILER WILL COMPLY WITH 2019 C.P.C. FOR THERMAL EXPANSION REQUIREMENTS.
20. ALL LAVATORY FAUCETS IN REST ROOMS SHALL BE THE SELF-CLOSING TYPE. PROVIDE VACUUM BREAKER AT HOSE BIBS WHERE REQUIRED BY CODE. PROVIDE ULTRA LOW FLUSH TOILETS IF APPLICABLE.
21. PLUMBING CONTRACTOR TO PROVIDE ACCESSIBLE FLOW CONTROL ON THE GREASE TRAP TO COMPLY WITH 2019 C.P.C.
22. PLUMBING CONTRACTOR TO PROVIDE ALL VENT, WATER AND WASTE LINE CONNECTIONS TO KITCHEN EQUIPMENT PER PLAN, SPECIFICATIONS, AND EQUIPMENT MANUFACTURER REQUIREMENTS.
23. PLUMBING CONTRACTOR TO ENSURE FAUCETS FOR ALL HAND SINKS PROVIDE BETWEEN 100°F & 108°F WITHIN 15 SECONDS. PROVIDE MIXING VALVES AS REQUIRED.
24. PLUMBING CONTRACTOR TO ENSURE FAUCETS AT ALL PREP SINKS, POT WASHING SINKS, GLASS WASHING SINKS, AND MOP SINKS PROVIDE MINIMUM 120°F WATER.
25. PLUMBING CONTRACTOR TO REVIEW K.E.C. PLUMBING ROUGH-IN SHOP DRAWINGS SUBMITTAL AND VERIFY ALL LOADS & CONNECTIONS.
26. WHERE ANY PLANS OR SPECIFICATIONS AR INCOMPLETE, AMBIGUOUS, OR CONTAIN CONFLICTING INSTRUCTIONS, THE PLUMBING CONTRACTOR IS RESPONSIBLE TO CONTACT THE K.E.C FOR CLARIFICATION BEFORE PROCEEDING.

PLUMBING LEGEND

- (CW) COLD WATER CONNECTION FAUCET SUPPLIED BY K.E.C., U.O.N. PIPING, STUB-IN, AND FINAL CONNECTION BY P.C., U.O.N.
- (HW) HOT WATER CONNECTION FAUCET SUPPLIED BY K.E.C., U.O.N. PIPING, STUB-IN, AND FINAL CONNECTION BY P.C., U.O.N.
- (NG OR LP) GAS CONNECTION w/ SHUT-OFF VALVE QUICK-DISCONNECT VALVE SUPPLIED BY K.E.C., U.O.N. PIPING, STUB-IN AND FINAL CONNECTION BY P.C., U.O.N.
- STUB UP WATER, HEIGHT AS PER SPECIFIED
- WASTE, DIRECT-CONNECTED UNLESS NOTED "OPEN HUB"
- FLOOR SINK WITH HALF GRATE. HALF GRATE EXPOSED TO PATH OF TRAVEL SHALL HAVE 1/2" MAX. GRATE OPENINGS
- FLOOR SINK WITH FULL GRATE. FULL GRATE SHALL HAVE 1/2" MAX. GRATE OPENINGS
- FLOOR DRAIN, MIN. 2% SLOPE TO DRAIN PER NOTES AND DETAILS. SUPPLIED AND INSTALLED BY P.C., U.O.N. WITH 1/2" MAX. STRAINER OPENINGS IN ALL DIRECTIONS.
- FIELD CONNECTIONS

(K.E.C).	= KITCHEN EQUIPMENT CONTRACTOR	(N)	= NEW
(G.C.)	= GENERAL CONTRACTOR	(E)	= EXISTING CONTRACTOR TO VERIFY LOCATION
(P.C.)	= PLUMBING CONTRACTOR	(D)	= DEMO EXITING
(M.W.)	= MILLWORK CONTRACTOR	(B)	= BEER LINE CONDUIT
(TYP.)	= TYPICAL	(S)	= SODA LINE CONDUIT
(U.O.N.)	= UNLESS OTHERWISE NOTED		
(K.E.C.)	= KITCHEN EQUIPMENT CONTRACTOR		

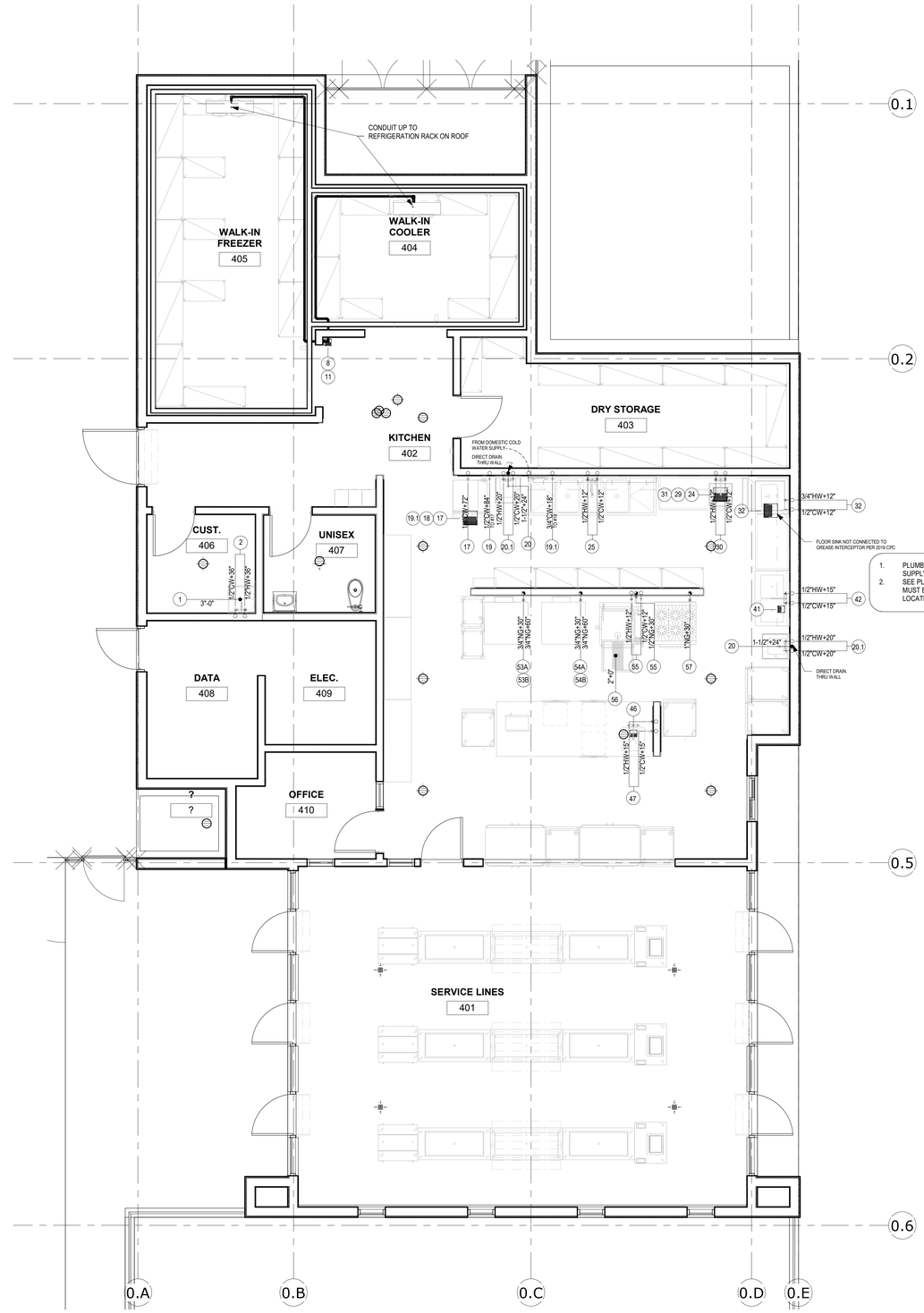

1. PLUMBER TO INSTALL (K.E.C. PROVIDED) ANSUL GAS SHUT-OFF VALVE (#69) ON GAS SUPPLY PIPE TO EQUIPMENT UNDER TYPE-I GREASE EXHAUST HOOD.
2. SEE PLUMBING PLANS FOR LOCATION OF ANSUL GAS SHUT-OFF VALVE. NOTE: VALVE MUST BE LOCATED IN AN ACCESSIBLE LOCATION TO ALLOW MANUAL RESETTING. IF LOCATED ABOVE CEILING, IT MUST BE ACCESSIBLE WITH A 6 FOOD LADDER

NOTE:
EQUIPMENT TAG CORRESPONDS TO EQUIPMENT SCHEDULE ON SHEET K 2.

REST ROOMS TO HAVE:
- HOT & COLD RUNNING WATER
- SOAP & SINGLE TOWEL DISPENSER (OR MECHANICAL DRYER)
- EXHAUST VENTILATION (FAN) PER UMC. ACTIVATED BY LIGHT SWITCH
- MEET ALL HEALTH DEPARTMENT REQUIREMENTS

KITCHEN PLUMBING ROUGH-INS FLOOR PLAN

1/4" = 1'-0"

GHS KITCHEN & WEIGHTROOM MOD: MARCH 1st DSA Submittal:

PROJECT No. :1-30-55
6/13/2022 7:47:29 AM

DRAWN BY: CHECKED BY:

ISSUE No.	DATE	DESCRIPTION	REVISION No.	DATE	DESCRIPTION
ISSUE No.	DATE	DESCRIPTION	REVISION No.	DATE	DESCRIPTION
ISSUE No.	DATE	DESCRIPTION	REVISION No.	DATE	DESCRIPTION
ISSUE No.	DATE	DESCRIPTION	REVISION No.	DATE	DESCRIPTION

RUHNAUCLARKE.COM
3775 TENTH STREET, RIVERSIDE CALIFORNIA 92501(951) 684 4664 / 5751 PALMER WAY, SUITE C, CARLSBAD CALIFORNIA 92010(760) 438 5899

GHS KITCHEN & WEIGHTROOM MOD: MARCH
1st DSA Submittal
GROSSMONT HIGH SCHOOL
1100 MURRAY DR, EL CAJON, CA 92020

FOODSERVICE PLUMBING ROUGH-INS

K 4

1-30-55

STAMPS

IDENTIFICATION STAMP
DIV. OF THE STATE ARCHITECT
APP: 04-120895 INC:
REVIEWED FOR
SS ☑ FLS ☑ ACS ☑
DATE: 06/27/2022

ORNESS DESIGN GROUP INC
FOODSERVICE DESIGN
5955 MIRA MESA BLVD.
SUITE H
SAN DIEGO, CA. 92121
(858) 457-5955

CONSULTANT BRANDING

RUHNAU
CLARKE
ARCHITECTS

NOTE:
EQUIPMENT TAG CORRESPONDS TO EQUIPMENT SCHEDULE ON SHEET K 2.

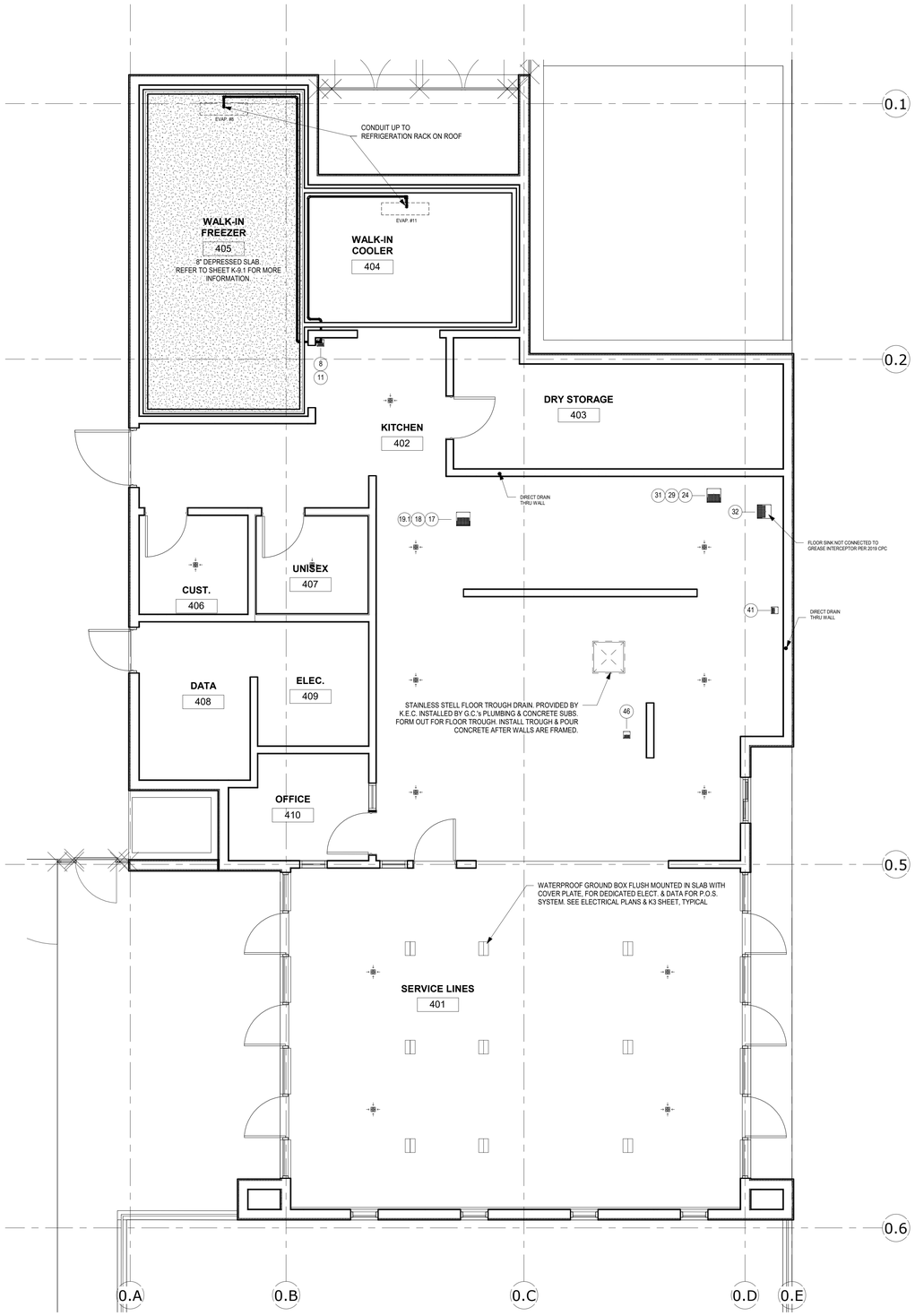

KITCHEN UNDERGROUND ROUGH-INS FLOOR PLAN

1/4" = 1'-0"

UNDERGROUND NOTES &LEGEND

1. SEE (FOODSERVICE) MECHANICAL, ELECTRICA, & PLUMBING ROUGH-IN DRAWINGS FOR UTILITY ROUGH-IN PLANS AND ADDITIONAL INFORMATION.
2. LOCATIONS OF FLOOR SINKS SHOWN ARE CRITICAL DIMENSIONS. LOCATIONS OF FLOOR DRAINS ARE APPROXIMATE.
3. SEE PLUMBING PLANS FOR ROUTING OF DRAINS TO GREASE INTERCEPTOR.
4. THESE PLANS ONLY SHOW ITEMS RELATED TO FS EQUIPMENT. SEE PLUMBING & ELECTRICAL PLANS FOR ADDITIONAL INFORMATION.
5. SEE FS DETAILS FOR SODA CHASE INFORMATION.
   CONDUIT: 5" SCH 40 PVC OR CODE APPROVED CHASE.
6. SEE FS DETAILS FOR BEER CHASE INFORMATION.
   CONDUIT: 6" SCH 40 PVC OR CODE APPROVED CHASE FOR 4, 6 OR 8 PRODUCT LINES
   CONDUIT: 8" SCH 40 PVC OR CODE APPROVED CHASE FOR 10 & 12 PRODUCT LINES
7. SEE FS DETAILS FOR FLOOR SINK INFORMATION.

- FLOOR DRAIN, MIN. 1/4": 12" SLOPE TO DRAIN PER NOTES AND DETAILS. SUPPLIED AND INSTALLED BY P.C., U.O.N.
- WASTE, DIRECT-CONNECTED UNLESS NOTED "OPEN HUB"
- FLOOR SINK WITH HALF GRATE. HALF GRATE EXPOSED TO PATH OF TRAVEL SHALL HAVE 1/2" MAX. GRATE OPENINGS
- FLOOR SINK WITH FULL GRATE. FULL GRATE SHALL HAVE 1/2" MAX. GRATE OPENINGS
- DEMO EXISTING
- GALVANIZED METAL CURB LOCATION (TYPICALLY 4" OR 6" HIGH)
- MILLWORK METAL CURB LOCATION (TYPICALLY 4" OR 6" HIGH)
- LOW WALL, OR DIE WALL
- CONDUIT CHASE UP (ABOVE GROUND, THROUGH WALL OR CEILING) BEER, SODA & SIZE TO BE SPECIFIED ON PLAN
- CONDUIT CHASE DOWN (BELOW DECK OR GRADE) BEER, SODA & SIZE TO BE SPECIFIED ON PLAN
- Co2 LINE

(K.E.C).	= KITCHEN EQUIPMENT CONTRACTOR	(N)	= NEW
(G.C.)	= GENERAL CONTRACTOR	(E)	= EXISTING CONTRACTOR TO VERIFY LOCATION
(P.C.)	= PLUMBING CONTRACTOR	(D)	= DEMO EXITING
(M.W.)	= MILLWORK CONTRACTOR	(B)	= BEER LINE CONDUIT
(TYP.)	= TYPICAL	(S)	= SODA LINE CONDUIT
(U.O.N.)	= UNLESS OTHERWISE NOTED		
(K.E.C.)	= KITCHEN EQUIPMENT CONTRACTOR		

GHS KITCHEN & WEIGHTROOM MOD: MARCH 1st DSA Submittal:

PROJECT No. :1-30-55
6/13/2022 7:47:32 AM

DRAWN BY: CHECKED BY:
ISSUE No.____ DATE____ DESCRIPTION____ REVISION No.____ DATE____ DESCRIPTION____
ISSUE No.____ DATE____ DESCRIPTION____ REVISION No.____ DATE____ DESCRIPTION____
ISSUE No.____ DATE____ DESCRIPTION____ REVISION No.____ DATE____ DESCRIPTION____
ISSUE No.____ DATE____ DESCRIPTION____ REVISION No.____ DATE____ DESCRIPTION____

RUHNAUCLARKE.COM
3775 TENTH STREET, RIVERSIDE CALIFORNIA 92501 (951) 684 4664 / 5751 PALMER WAY, SUITE C, CARLSBAD CALIFORNIA 92010 (760) 438 5899

GHS KITCHEN & WEIGHTROOM MOD: MARCH 1st DSA Submittal
GROSSMONT HIGH SCHOOL
1100 MURRAY DR, EL CAJON, CA 92020

FOODSERVICE UNDERGROUND

K 5

1-30-55

STAMPS

IDENTIFICATION STAMP
DIV. OF THE STATE ARCHITECT
APP: 04-120895 INC:
REVIEWED FOR
SS ☑ FLS ☑ ACS ☑
DATE: 06/27/2022

ORNESS DESIGN GROUP INC
FOODSERVICE DESIGN
5955 MIRA MESA BLVD.
SUITE H
SAN DIEGO, CA. 92121
(858) 457-5955

CONSULTANT BRANDING

RUHNAU CLARKE ARCHITECTS

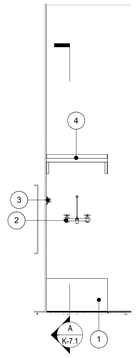

ELEVATION 1 - MOP SINK
1/2" = 1'-0"

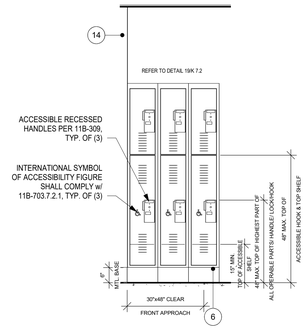

ELEVATION 2 - EMPLOYEE LOCKERS
1/2" = 1'-0"

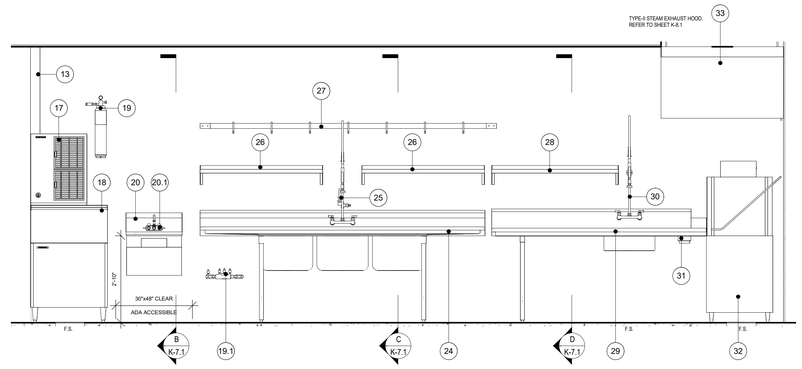

ELEVATION 3 - DISH WASHING
1/2" = 1'-0"

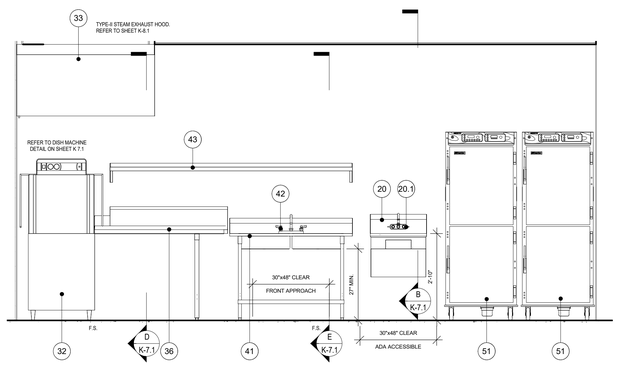

ELEVATION 4 - PREP
1/2" = 1'-0"

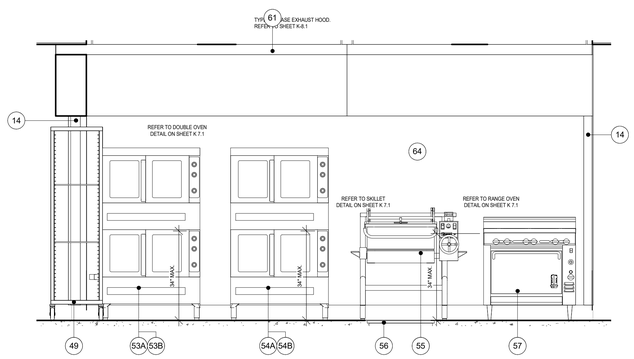

ELEVATION 5 - COOKLINE
1/2" = 1'-0"

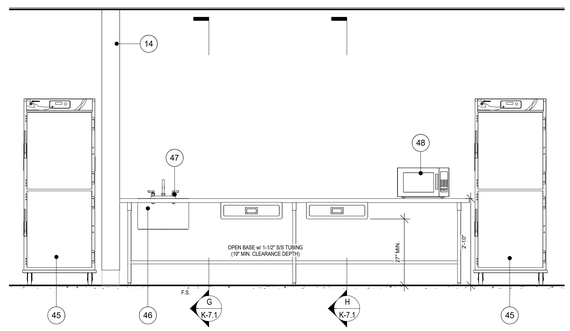

ELEVATION 6 - ISLAND PREP TABLE
1/2" = 1'-0"

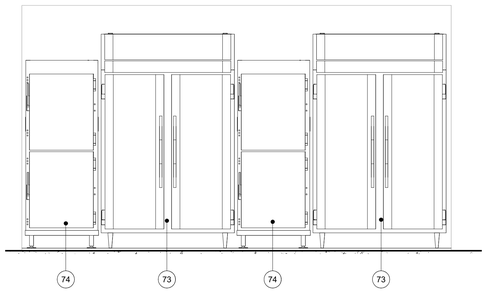

ELEVATION 7 - PASS-THRU's
1/2" = 1'-0"

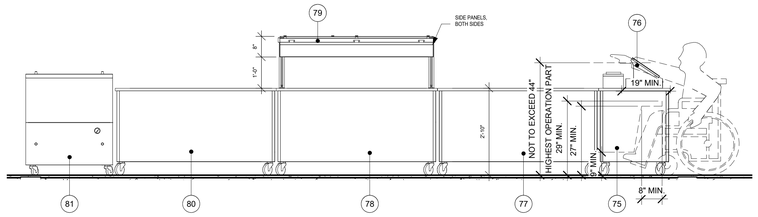

ELEVATION 8 - SERVICE LINE
1/2" = 1'-0"

GHS KITCHEN & WEIGHTROOM MOD: MARCH 1st DSA Submittal:

PROJECT No. :1-30-55
6/14/2022 7:38:55 AM

DRAWN BY: CHECKED BY:

ISSUE No.____ DATE____ DESCRIPTION____
ISSUE No.____ DATE____ DESCRIPTION____
ISSUE No.____ DATE____ DESCRIPTION____
ISSUE No.____ DATE____ DESCRIPTION____

REVISION No.____ DATE____ DESCRIPTION____
REVISION No.____ DATE____ DESCRIPTION____
REVISION No.____ DATE____ DESCRIPTION____
REVISION No.____ DATE____ DESCRIPTION____

RUHNAUCLARKE.COM
3775 TENTH STREET, RIVERSIDE CALIFORNIA 92501(951) 684 4664 / 5751 PALMER WAY, SUITE C, CARLSBAD CALIFORNIA 92010(760) 438 5899

GHS KITCHEN & WEIGHTROOM MOD: MARCH 1st DSA Submittal
GROSSMONT HIGH SCHOOL
1100 MURRAY DR, EL CAJON, CA 92020

FOODSERVICE ELEVATIONS

K 6

1-30-55

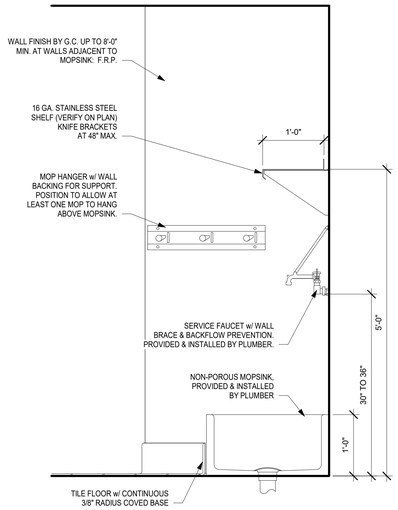

SECTION A - MOP SINK
1" = 1'-0"

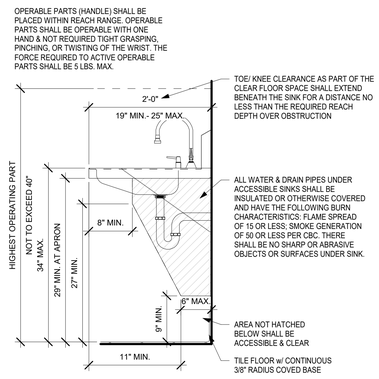

SECTION B - HAND SINK
1" = 1'-0"

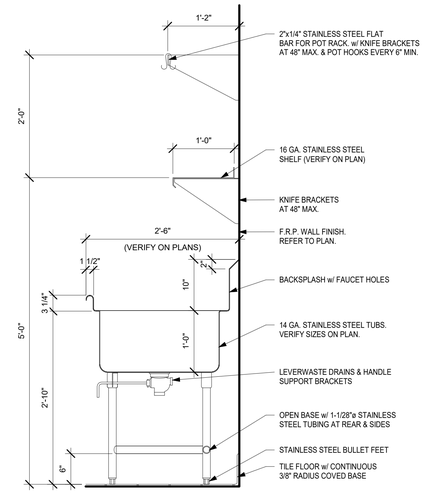

SECTION C - 3 COMPARTMENT SINK
1" = 1'-0"

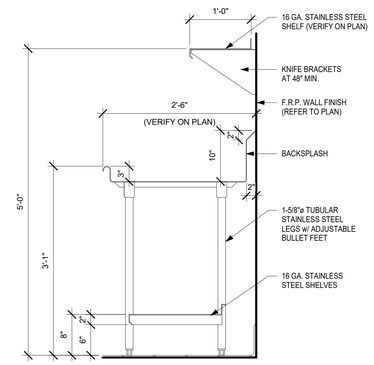

SECTION D - DISH TABLE
1" = 1'-0"

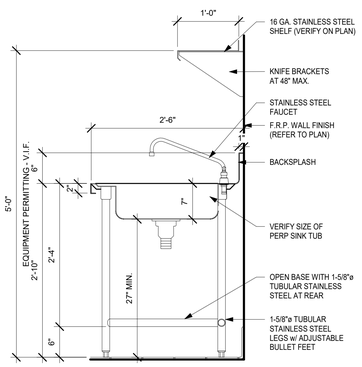

SECTION E - PREP SINK
1" = 1'-0"

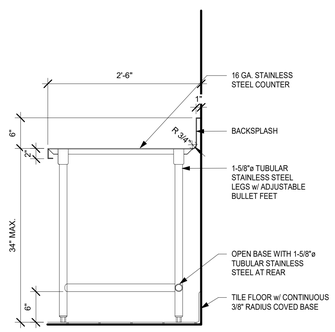

SECTION F - PREP TABLE
1" = 1'-0"

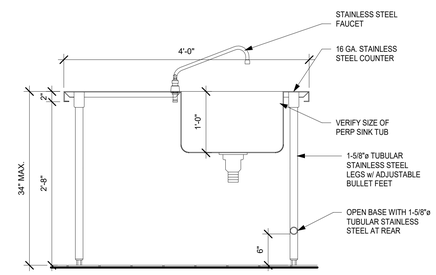

SECTION G - ISLAND PREP SINK TABLE
1" = 1'-0"

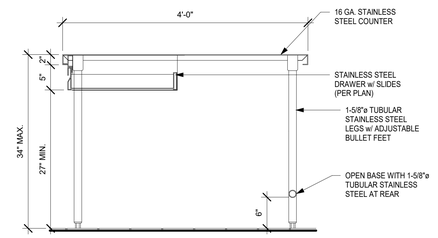

SECTION H - ISLAND TABLE
1" = 1'-0"

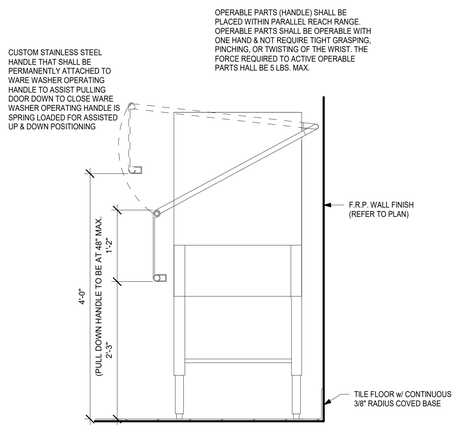

DISH MACHINE DETAIL
1" = 1'-0"

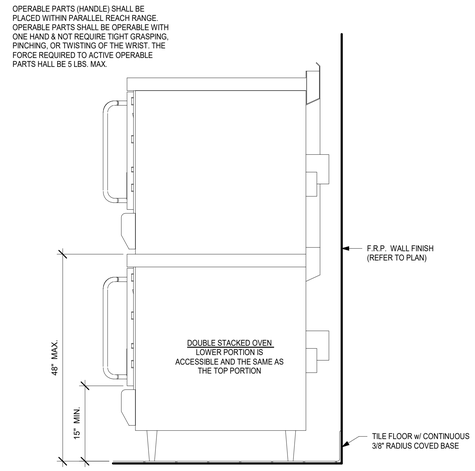

DOUBLE OVEN DETAIL
1" = 1'-0"

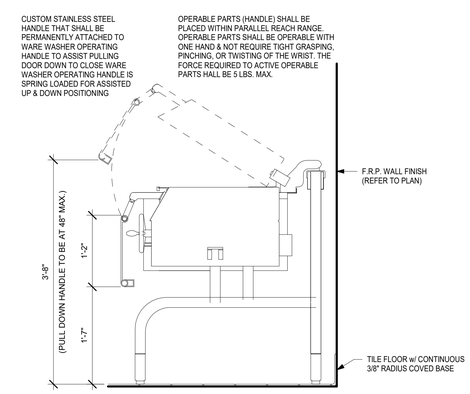

SKILLET DETAIL
1" = 1'-0"

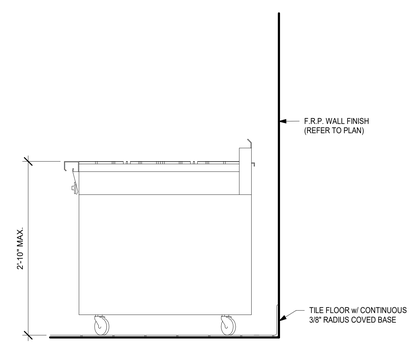

RANGE OVEN DETAIL
1" = 1'-0"

STAMPS

IDENTIFICATION STAMP
DIV. OF THE STATE ARCHITECT
APP: 04-120895 INC:
REVIEWED FOR
SS ☑ FLS ☑ ACS ☑
DATE: 06/27/2022

ORNESS DESIGN GROUP INC
FOODSERVICE DESIGN
5955 MIRA MESA BLVD.
SUITE H
SAN DIEGO, CA, 92121
(858) 457-5955

CONSULTANT BRANDING

RUHNAU CLARKE ARCHITECTS

GHS KITCHEN & WEIGHTROOM MOD: MARCH 1st DSA Submittal:

PROJECT No. :1-30-55
6/13/2022 7:47:41 AM

DRAWN BY: CHECKED BY:

ISSUE No.____ DATE____ DESCRIPTION____
REVISION No.____ DATE____ DESCRIPTION____

RUHNAUCLARKE.COM
3775 TENTH STREET, RIVERSIDE CALIFORNIA 92501 (951) 684 4664 / 5751 PALMER WAY, SUITE C, CARLSBAD CALIFORNIA 92010 (760) 438 5899

GHS KITCHEN & WEIGHTROOM MOD: MARCH 1st DSA Submittal
GROSSMONT HIGH SCHOOL
1100 MURRAY DR, EL CAJON, CA 92020

FOODSERVICE SECTIONS

K 7.1

1-30-55

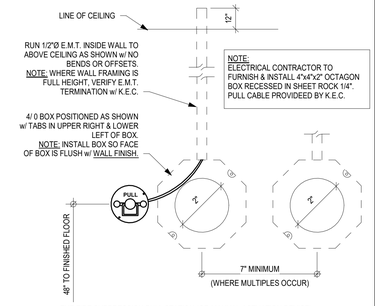

THE FIRE SUPPRESSION PULL STATION (OR MANUAL ACTUATION DEVICE) TO BE MOUNT AT OR NEAR A MEANS OF EGRESS FROM THE COOKING AREA, A MINIMUM OF 10 FEET & A MAXIMUM OF 20 FEET FROM THE KITCHEN EXHAUST SYSTEM

1 FIRE SUPPRESSION SYSTEM REMOTE PULL STATION

SCALE: NONE

SEQUENCE OF ANSUL EVENTS:

AUTOMATIC SYSTEM ACTIVATION

1. TEMPERATURE RATED FUSIBLE LINK SEPARATES DUE TO EXCESS HEAT, RELEASING TENSION ON DETECTION CABLE. ACTUATING REGULATED RELEASE. PUNCTURING THE HIGH PRESSURE CARTRIDGE SEAL.
2a. HIGH PRESSURE CARTRIDGE PUSHES EXTINGUISHING AGENT THROUGH PIPING, DISCHARGING THROUGH NOZZLES TO APPLIANCES TO APPLIANCES SUPPRESSING THE FIRE.
2b. SIMULTANEOUSLY, THE MICRO-SWITCH MECHANICALLY CHANGES STATE AND CAUSES THE SHUTDOWN OF ALL ELECTRICAL CURRENT UNDER THE HOOD LIGHTS, AND AN ALARM SIGNAL IS SENT TO THE FIRE ALARM CONTROL PANEL.
2c. SIMULTANEOUSLY, THE MICRO-SWITCH MECHANICALLY CHANGES STATE AND SHUT OFF POWER TO ELECTRIC GAS SHUT-OFF VALVE, SHUTTING OFF GAS TO ALL APPLIANCES UNDER THE HOOD.
2d. SIMULTANEOUSLY, THE MICRO-SWITCH MECHANICALLY CHANGES STATE AND ENERGIZE EXHAUST SHUTS OFF POWER TO THE MAKE UP AIR (MUA) SYSTEM, SHUTTING OF THE AIR SUPPLY TO THE HOOD MUA SUPPLY PLENUMS.

MANUAL SYSTEM ACTIVATION

1. FOR MANUAL ACTIVATION OF FIRE SUPPRESSION SYSTEM, PULLING THE MANUAL PULL STATION RING WILL BEGIN EVENTS 2a. 2b & 2c.

THE ELECTRICAL GAS VALVES ARE DESIGNED TO SHUT OFF THE FLOW OF EITHER NATURAL OR LP GAS TO THE APPLIANCES UPON ACTUATION OF THE REGULATED RELEASE ASSEMBLE. THE VALVE IS HELD OPEN BY AN ENERGIZED SOLENOID AND UPON SYSTEM ACTUATION, THE SWITCH CONTACTS IN THE REGULATED RELEASE ASSEMBLY OPEN. THUS DE-ENERGIZING THE CIRCUIT TO THE GAS VALVE SOLENOID, CAUSING THE VALVE TO CLOSE.

POWER TO LIGHTS & COOKING EQUIPMENT UNDER HOOD

SHUNT TRIP AT ELECTRICAL PANEL. POWER TO UNDER HOOD EQUIPMENT AND HOOD LIGHTS TO BE SHUNTED OFF DURING ANSUL ACTIVATION.

POWER TO COOKING EQUIPMENT. SHUNT TRIP BREAKER (BY OTHERS)

VOLTAGE FREE N/O CONTACTS FOR INTERCONNECTION TO THE COOKING EQUIPMENT SHUNT TRIP.

HOOD CONTROL, BMS OR, MUA

VOLTAGE FREE CONTACTS N/C FOR INTERCONNECTION TO THE MUA, HOOD CONTROLLER, OR BMS HVAC SYSTEMS.

CIRCUIT THROUGH A NORMALLY OPEN CONTACT – WHEN CLOSED. EXHAUST FAN WILL TURN ON "NIGHT OPERATION"

CIRCUIT THROUGH A NORMALLY CLOSED CONTACT – TURNS OFF MUA FAN. SET OF CONTACTS IN SERIES WITH MUA CONTROL COIL.

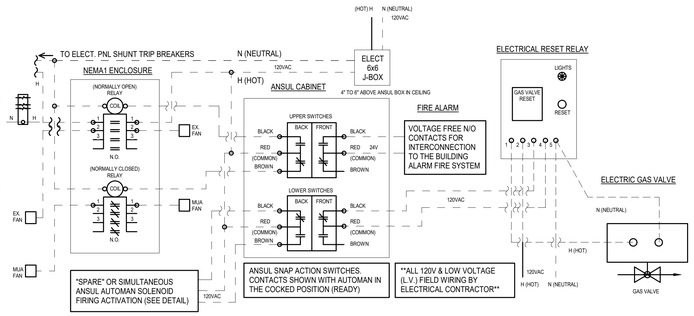

2 ANSUL ELECTRICAL DETAIL

SCALE: NONE

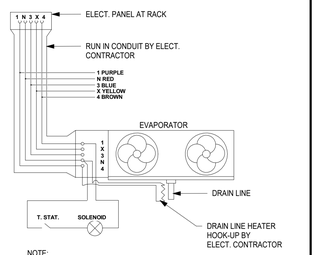

NOTE:
DRAIN LINE HEATER: TERM N AND 1
T. STAT & SOLENOID: TERM N AND 4
TIMECLOCK TERMINAL "N" IS NOT NEUTRAL

3 WALK-IN FREEZER WIRING SCHEMATIC

SCALE: NONE

STAMPS

IDENTIFICATION STAMP
DIV. OF THE STATE ARCHITECT
APP: 04-120895 INC:
REVIEWED FOR
SS ☑ FLS ☑ ACS ☑
DATE: 06/27/2022

ORNESS DESIGN GROUP INC
FOODSERVICE DESIGN
5955 MIRA MESA BLVD.
SUITE H
SAN DIEGO, CA, 92121
(858) 457-5955

CONSULTANT BRANDING

RUHNAU CLARKE ARCHITECTS

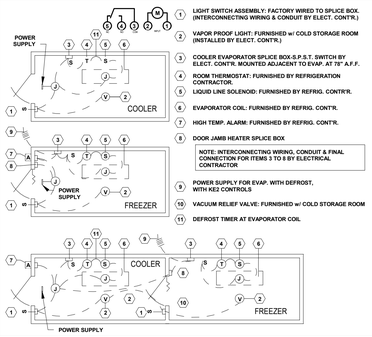

1. LIGHT SWITCH ASSEMBLY: FACTORY WIRED TO SPLICE BOX. (INTERCONNECTING WIRING & CONDUIT BY ELECT. CONTR.)
2. VAPOR PROOF LIGHT: FURNISHED w/ COLD STORAGE ROOM (INSTALLED BY ELECT. CONTR.)
3. COOLER EVAPORATOR SPLICE BOX-S.P.S.T. SWITCH BY ELECT. CONTR. MOUNTED ADJACENT TO EVAP. AT 79" A.F.F.
4. ROOM THERMOSTAT: FURNISHED BY REFRIGERATION CONTRACTOR.
5. LIQUID LINE SOLENOID: FURNISHED BY REFRIG. CONTR'R.
6. EVAPORATOR COIL: FURNISHED BY REFRIG. CONTR.
7. HIGH TEMP. ALARM: FURNISHED BY REFRIG. CONTR.
8. DOOR JAMB HEATER SPLICE BOX

NOTE: INTERCONNECTING WIRING, CONDUIT & FINAL CONNECTION FOR ITEMS 3 TO 8 BY ELECTRICAL CONTRACTOR

9. POWER SUPPLY FOR EVAP. WITH DEFROST, WITH KE2 CONTROLS
10. VACUUM RELIEF VALVE: FURNISHED w/ COLD STORAGE ROOM
11. DEFROST TIMER AT EVAPORATOR COIL

4 WALK-IN COOLER/ FREEZER WIRING SCHEMATIC

SCALE: NONE

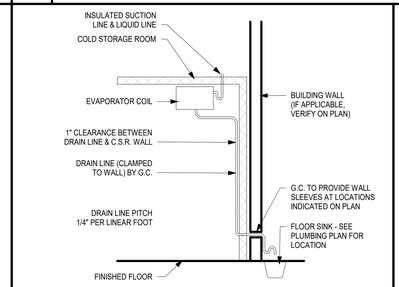

NOTE:
REFRIGERATION CONTRACTOR TO FURNISH & INSTALL FREEZER DRAIN LINE HEATERS.
ELECTRICAL CONTRACTOR TO HOOK UP HEATERS.

5 WALK-IN COOLER/ FREEZER DRAIN LINE

SCALE: NONE

NOTE:
PER HEALTH DEPT., ALL FLOOR DRAINS MUST BE FLUSH w/ THE FLOOR FINISH AS SHOWN

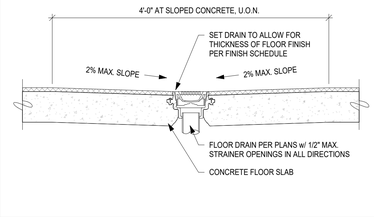

6 FLOOR DRAIN

SCALE: NONE

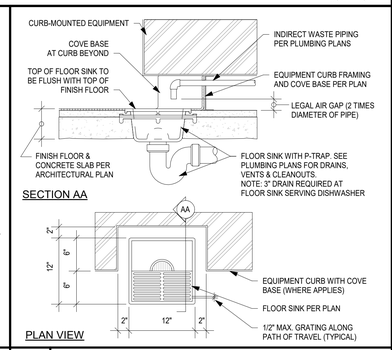

7 FLOOR SINK

SCALE: NONE

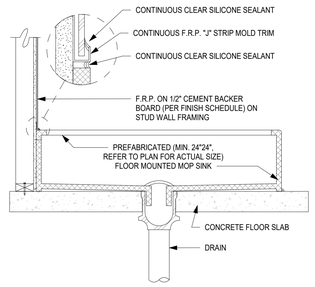

8 MOP SINK

SCALE: NONE

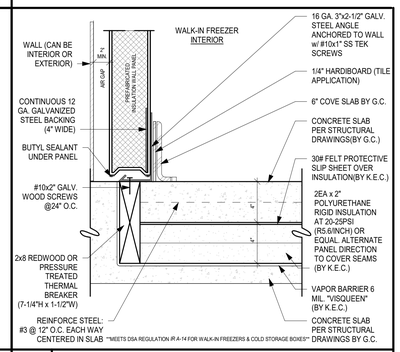

MEETS DSA REGULATION IR A-14 FOR WALK-IN FREEZERS & COLD STORAGE BOXES

9 DEPRESSED SLAB @ INSULATED FLOOR-PANEL TO FLOOR CONNECTION AT WALL

SCALE: NONE

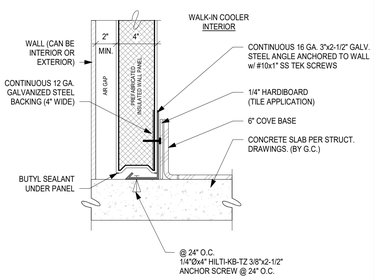

10 PANEL TO FLOOR CONNECTION

SCALE: NONE

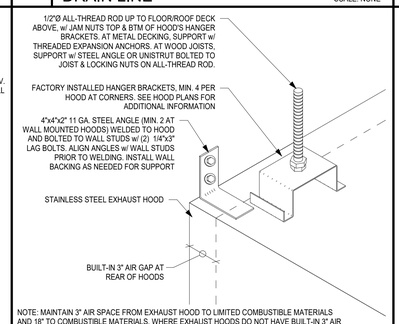

NOTE: MAINTAIN 3" AIR SPACE FROM EXHAUST HOOD TO LIMITED COMBUSTIBLE MATERIALS AND 18" TO COMBUSTIBLE MATERIALS. WHERE EXHAUST HOODS DO NOT HAVE BUILT-IN 3" AIR GAP, HOLD HOOD MIN. 3" AWAY FROM WALLS AND FLASH OPENING w/ STAINLESS STEEL

11 TYPICAL HOOD CONNECTION

SCALE: NONE

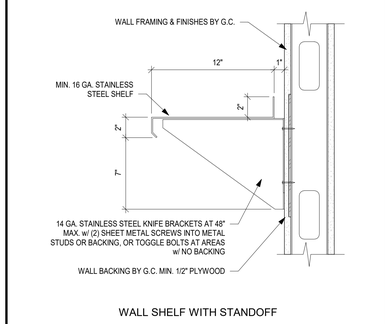

WALL SHELF WITH STANDOFF

12 STAINLESS STEEL WALL SHELF

SCALE: NONE

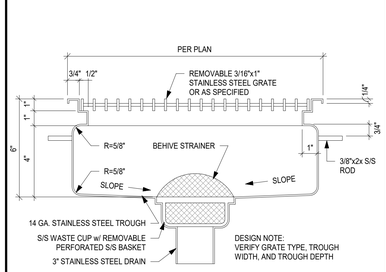

13 FLOOR TROUGH (ANTI-SPLASH TYPE)

SCALE: NONE

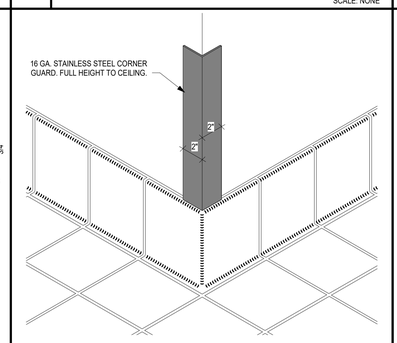

14 CORNER GUARD DETAIL

SCALE: NONE

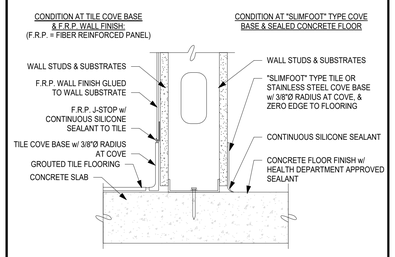

THIS DETAIL IS INTENDED TO SHOW HEALTH DEPARTMENT APPROVED MATERIALS & INSTALLATION METHODS.
SEE ARCHITECTURAL PLANS FOR WALL FRAMING & FINISH SPECIFICATIONS.

15 COVE BASE FINISHES

SCALE: NONE

NOTE:
1. PER HEALTH DEPARTMENT REQUIREMENTS, NO ABRASIVE FINISH IS PERMITTED UNDER EQUIPMENT OR IN COOLERS. OPEN WALKWAYS TO HAVE ABRASIVE FINISH.
2. VERIFY EXACT LOCATION OF EQUIPMENT w/ EQUIPMENT CONTRACTOR, IT IS IMPORTANT TO FOLLOW THE INTENT & PURPOSE OF THIS DETAIL.

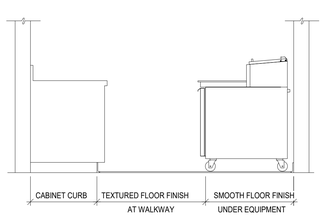

16 FLOOR FINISH LAYOUT

SCALE: NONE

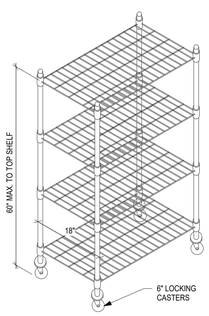

17 TYPICAL STORAGE SHELF

SCALE: NONE

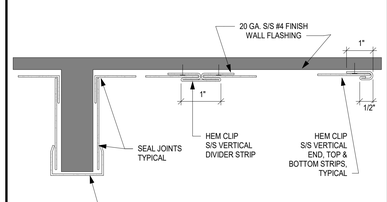

18 STAINLESS STEEL WALL FLASHING ASSEMBLY

SCALE: NONE

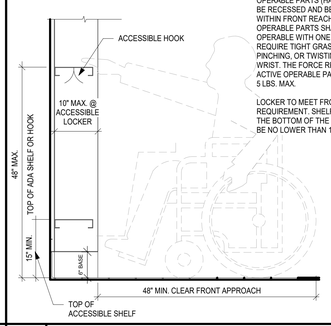

OPERABLE PARTS (HANDLE) SHALL BE RECESSED AND BE PLACED WITHIN FRONT REACH RANGE. OPERABLE PARTS SHALL BE OPERABLE WITH ONE HAND & NOT REQUIRE TIGHT GRASPING PINCHING, OR TWISTING OF THE WRIST. THE FORCE REQUIRED TO ACTIVE OPERABLE PARTS SHALL BE 5 LBS. MAX.

LOCKER TO MEET FRONT REACH REQUIREMENT. SHELF PLACED NEAR THE BOTTOM OF THE LOCKER SHALL BE NO LOWER THAN 15" A.F.F.

19 ACCESSIBLE LOCKER FRONT REACH REQUIREMENT

SCALE: NONE

SEQUENCE OF EVENTS:

AUTOMATIC SYSTEM ACTIVATION

1. TEMPERATURE RATED FUSIBLE LINK SEPARATES DUE TO EXCESS HEAT, RELEASING TENSION ON DETECTION CABLE. ACTUATING REGULATED RELEASE. PUNCTURING THE HIGH PRESSURE CARTRIDGE SEAL.
2a. HIGH PRESSURE CARTRIDGE PUSHES EXTINGUISHING AGENT THROUGH PIPING, DISCHARGING THROUGH NOZZLES TO APPLIANCES TO APPLIANCES SUPPRESSING THE FIRE.
2b. SIMULTANEOUSLY, THE MICRO-SWITCH MECHANICALLY CHANGES STATE AND CAUSES THE SHUTDOWN OF ALL ELECTRICAL CURRENT UNDER THE HOOD AND AN ALARM SIGNAL IS SENT TO THE FIRE ALARM CONTROL PANEL.
2c. SIMULTANEOUSLY, THE MICRO-SWITCH MECHANICALLY CHANGES STATE AND SHUTS OFF POWER TO ELECTRIC GAS SHUT-OFF VALVE, SHUTTING OFF GAS TO ALL APPLIANCES UNDER THE HOOD.

MANUAL SYSTEM ACTIVATION

1. FOR MANUAL ACTIVATION OF FIRE SUPPRESSION SYSTEM, PULLING THE MANUAL PULL STATION RING WILL BEGIN EVENTS 2a, 2b & 2c.

THE ELECTRICAL GAS VALVES ARE DESIGNED TO SHUT OFF THE FLOW OF EITHER NATURAL OR LP GAS TO THE APPLIANCES UPON ACTUATION OF THE REGULATED RELEASE ASSEMBLE. THE VALVE IS HELD OPEN BY AN ENERGIZED SOLENOID AND UPON SYSTEM ACTUATION, THE SWITCH CONTACTS IN THE REGULATED RELEASE ASSEMBLY OPEN. THUS DE-ENERGIZING THE CIRCUIT TO THE GAS VALVE SOLENOID, CAUSING THE VALVE TO CLOSE.

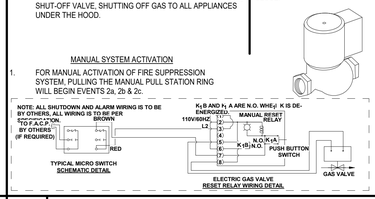

20 ELECTRICAL GAS VALVE

SCALE: NONE

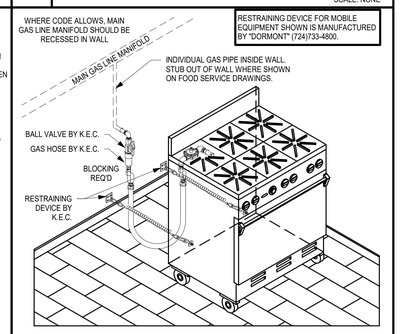

21 QUICK GAS DISCONNECT

SCALE: NONE

GHS KITCHEN & WEIGHTROOM MOD: MARCH 1st DSA Submittal:

PROJECT No. :1-30-55
6/14/2022 7:38:59 AM

DRAWN BY: CHECKED BY:

ISSUE No.	DATE	DESCRIPTION	REVISION No.	DATE	DESCRIPTION
ISSUE No.	DATE	DESCRIPTION	REVISION No.	DATE	DESCRIPTION
ISSUE No.	DATE	DESCRIPTION	REVISION No.	DATE	DESCRIPTION
ISSUE No.	DATE	DESCRIPTION	REVISION No.	DATE	DESCRIPTION

RUHNAUCLARKE.COM
3775 TENTH STREET, RIVERSIDE CALIFORNIA 92501(951) 684 4664 / 5751 PALMER WAY, SUITE C, CARLSBAD CALIFORNIA 92010(760) 438 5899

GHS KITCHEN & WEIGHTROOM MOD: MARCH 1st DSA Submittal
GROSSMONT HIGH SCHOOL
1100 MURRAY DR, EL CAJON, CA 92020

FOODSERVICE TYPICAL DETAILS

K 7.2

1-30-55

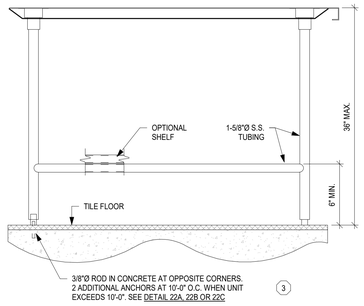

1 FREE STANDING TABLE

SCALE: NONE

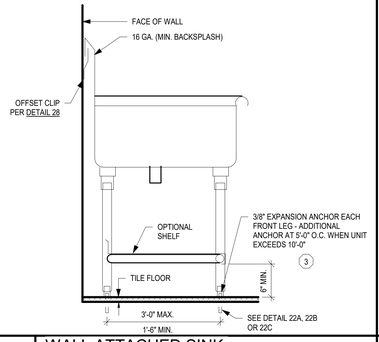

2 WALL ATTACHED SINK, WORKTABLE WITH CLIP

SCALE: NONE

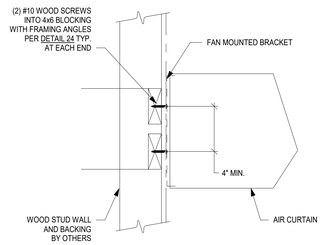

CONNECTIONS TO WOOD

6 WALL MOUNTED AIR CURTAIN

SCALE: NONE

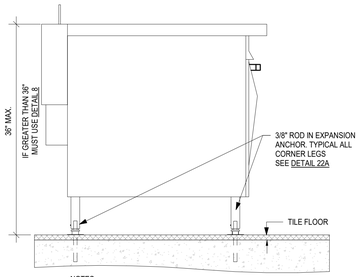

NOTES:
1. THE LEAST PLAN DIMENSION MUST BE GREATER THAN OR EQUAL TO 6/10 HEIGHT OR USE DETAIL 8.
2. APPLIANCE WITHIN COUNTER MUST BE ATTACHED TO COUNTER IF THE COUNTER IS ATTACHED TO FLOOR WITHIN 24" OF APPLIANCE EACH SIDE.

7 FLOOR MOUNTED APPLIANCE

SCALE: NONE

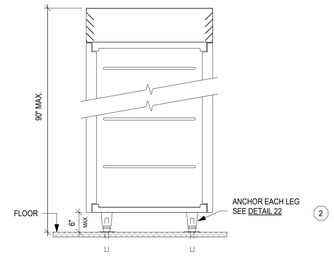

8 PASS-THROUGH FLOOR MOUNTED APPLIANCES

SCALE: NONE

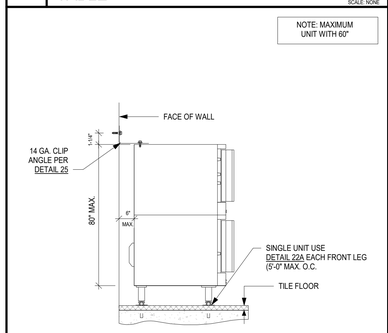

11 FLOOR MOUNTED APPLIANCES AGAINST WALL

SCALE: NONE

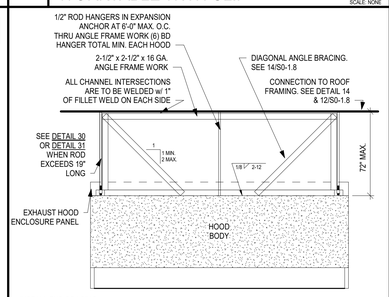

FRONT & BACK BRACING ELEVATION

13 HOOD BRACING

SCALE: NONE

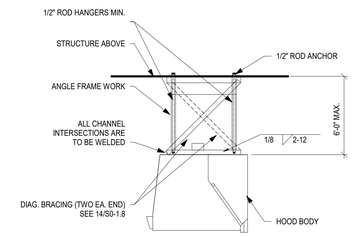

NOTE: SEE 12/S0-1.8 FOR ADDITIONAL INFO.

14 HOOD DETAIL

SCALE: NONE

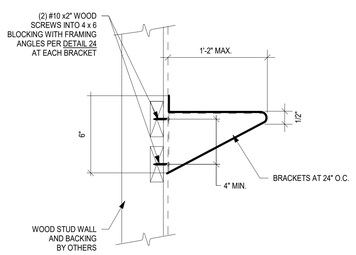

CONNECTIONS TO WOOD

17 WALL MOUNTED SHELVES

SCALE: NONE

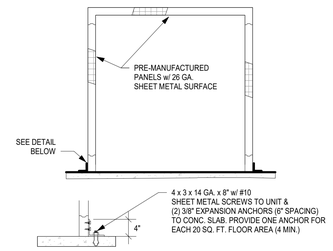

20 WALK-IN BOXES

SCALE: NONE

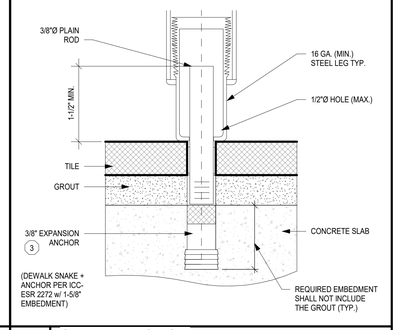

22A SHEAR ANCHOR AT BULLET LEG

SCALE: NONE

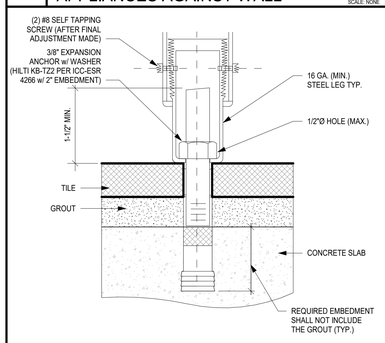

22B SHEAR & UPLIFT ANCHOR AT BULLET LEG

SCALE: NONE

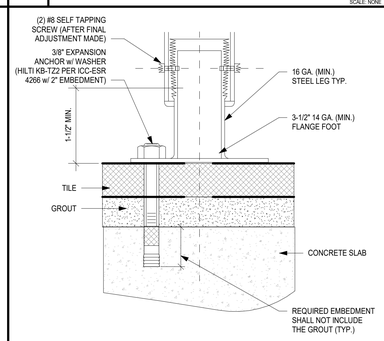

22C SHEAR & UPLIFT ANCHOR AT FLANGED LEG

SCALE: NONE

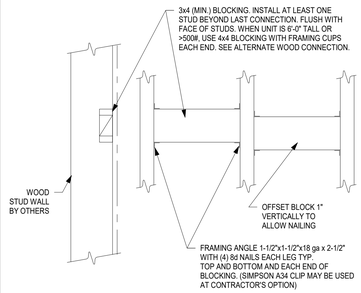

CONNECTIONS TO WOOD

24 WALL SUPPORT BACKING

SCALE: NONE

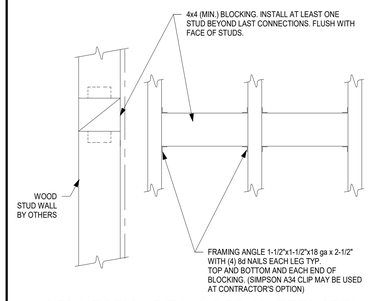

CONNECTIONS TO WOOD (ALTERNATE)

24 WALL SUPPORT BACKING

SCALE: NONE

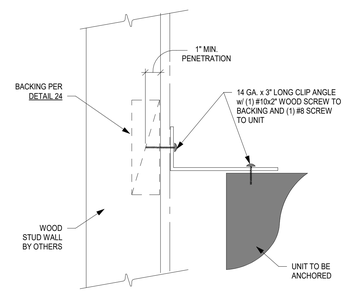

CONNECTIONS TO WOOD

25 TOP ANGLE CONNECTION

SCALE: NONE

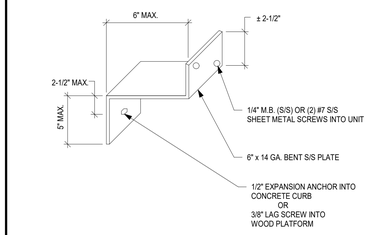

26 Z-CLIP DETAIL

SCALE: NONE

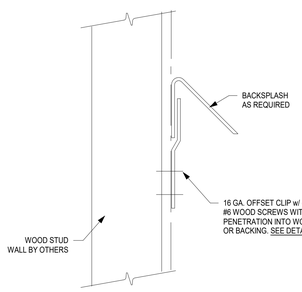

CONNECTIONS TO WOOD

28 OFFSET CLIP DETAILS

SCALE: NONE

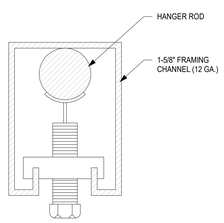

STIFFENER CONNECTION FOR 7/8" ROD & SMALLER

30 FRAMING CHANNEL/ ROD STIFFENER

SCALE: NONE

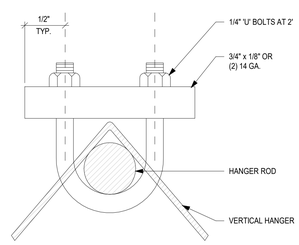

31 ALTERNATE ROD STIFFENER

SCALE: NONE

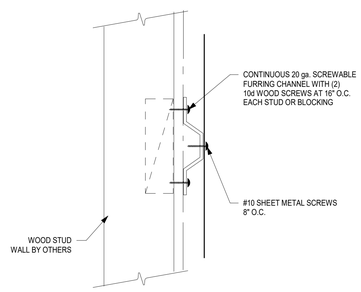

CONNECTIONS TO WOOD

33 FURRING CHANNEL CONNECTIONS

SCALE: NONE

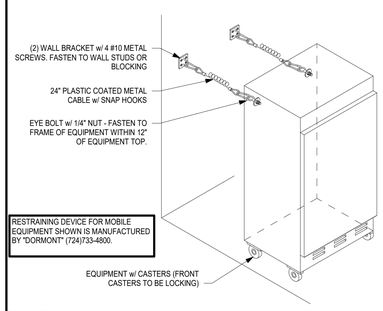

34 SEISMIC RESTRAINT AT EQUIPMENT ON CASTERS

NOTE:
- ALL "HARDWIRE AND GAS" KITCHEN EQUIPMENT SHALL BE INSTALLED WITH SEISMIC RESTRAINTS PER KITCHEN VENTILATION SYSTEMS & FOOD SERVICE EQUIPMENT FABRICATION & INSTALLATION GUIDELINES AS PUBLISHED BY SMACNA AND APPROVED BY DSA.
- WHERE ANCHORAGE DETAILS ARE NOT SHOWN ON DRAWINGS OR IN THE "GUIDELINES", THE FIELD INSTALLATION SHALL BE SUBJECT TO THE APPROVAL OF THE ARCHITECT AND THE DSA FIELD ENGINEER.
- A COPY OF THE "GUIDELINES" SHALL BE PROVIDED BY THE CONTRACTOR AND KEPT ON THE JOB SITE AT ALL TIMES.

ANCHOR SPECIFICATION FOR S.M.A.C.N.A. APPROVED DETAILS:

1. 1/4"Ø x 4" HILTI WITH SELF-DRILLING SCREW AT 24" O.C. PER ESR #2196
2. 1/2" HILTI KB-TZ2 ANCHORS PER ICC ESR-1917 (MIN. EMBED IN CONCRETE = 3-1/4", MIN. EDGE DIST. = 3-3/4")
3. 3/8"Ø HILTI KB-TZ2 ANCHORS, PER ICC ESR-1917 (MIN. EMBED IN CONCRETE = 2", MIN. EDGE DIST. = 2-1/2")

NOTE:
ALL ANCHORS SHALL BE STAINLESS STEEL

SEISMIC NOTES

STAMPS

IDENTIFICATION STAMP
DIV. OF THE STATE ARCHITECT
APP: 04-120895 INC:
REVIEWED FOR
SS ☑ FLS ☑ ACS ☑
DATE: 06/27/2022

ORNESS DESIGN GROUP INC
FOODSERVICE DESIGN
5955 MIRA MESA BLVD.
SUITE H
SAN DIEGO, CA, 92121
(858) 457-5955

CONSULTANT BRANDING

RUHNAU CLARKE ARCHITECTS

GHS KITCHEN & WEIGHTROOM MOD: MARCH 1st DSA Submittal:

PROJECT No. :1-30-55
6/16/2022 10:12:18 AM

DRAWN BY: CHECKED BY:

ISSUE No.	DATE	DESCRIPTION	REVISION No.	DATE	DESCRIPTION
ISSUE No.	DATE	DESCRIPTION	REVISION No.	DATE	DESCRIPTION
ISSUE No.	DATE	DESCRIPTION	REVISION No.	DATE	DESCRIPTION
ISSUE No.	DATE	DESCRIPTION	REVISION No.	DATE	DESCRIPTION

RUHNAUCLARKE.COM
3775 TENTH STREET, RIVERSIDE CALIFORNIA 92501(951) 684 4664 / 5751 PALMER WAY, SUITE C, CARLSBAD CALIFORNIA 92010(760) 438 5899

GHS KITCHEN & WEIGHTROOM MOD: MARCH 1st DSA Submittal
GROSSMONT HIGH SCHOOL
1100 MURRAY DR, EL CAJON, CA 92020

FOODSERVICE SEISMIC DETAILS

K 7.3

1-30-55

1. MECHANICAL EXHAUST SYSTEM TO BE PROVIDE OVER ALL COOKING EQUIPMENT.
2. MECHANICAL INCLUDED MAKE-UP AIR MUST BE PROVIDE FOR COOKING & DISH WASHING EXHAUST AT A SUFFICIENT CAPACITY TO REPLACE 100% OF AIR BEING EXHAUSTED. SUPPLY CFM FROM HVAC REGISTERS TO EQUAL 100% CFM
3. MAKE-UP AIR SHALL BE DELIVERED IN THE PROXIMITY OF THE EXHAUST SYSTEM IN A MANNER NOT TO CREATE UNDUE AIR TURBULENCE IN THE WORKING AREAS.
4. LOCATION OF THE EXHAUST & MAKE-UP AIR DUCT(S) ARE TO BE VERIFIED AT THE JOB SITE.
5. U.L. LISTED EXHAUST HOOD(S) TO BE CONSTRUCTED & INSTALLED TO ALL U.L. SPECIFICATIONS.
6. ELECTRICAL CONTRACTOR TO INSTALL HOOD LIGHTING. INTER-CONNECT LIGHTS IF MORE THAN ONE PROVIDED & MAKE FINAL CONNECTIONS.
7. ELECTRICAL CONTRACTOR TO PROVIDE *INTERLOCK SWITCH FOR THE MAKE-UP AIR SYSTEM & EXHAUST BLOWER (TYP.)*. ELECTRICIAN TO PROVIDE & INSTALL 4" OCTAGON FIRE SUPPRESSION PULL STATION.
   - THE MANUAL ACTUATION DEVICE (FIRE SUPPRESSION PULL STATION) TO BE MOUNTED AT OR NEAR A MEANS OF EGRESS FROM THE COOKING AREA. A MINIMUM OF 10 FEET & A MAXIMUM OF 20 FEET FROM THE KITCHEN EXHAUST SYSTEM & 48" FROM FINISHED FLOOR WITH ½" CONDUIT (SEE DETAIL).
8. WHEN FIRE SUPPRESSION SYSTEM ACTIVATES THE FOLLOWING MUST OCCUR:
   - EXHAUST FAN STAYS ON OR ACTIVATES
   - MAKE-UP AIR & ALL POWER UNDER HOOD TURNS OFF
   - BUILDING ALARM ACTIVATES
9. GENERAL CONTRACTOR TO PROVIDE ALL ROOF PENETRATION(S) EXHAUST SHAFT & PRE-FABRICATED BLOWER & MAKE-UP AIR CURB(S).
10. TURBINE UPDRAFT EXHAUST FANS SHALL BE HINGED & CHAINED FOR CLEANING OF VERTICAL DUCT BY MECHANICAL CONTRACTOR.

FOR QUESTIONS, CALL THE
San Diego Office
REGION 96
PHONE: (858) 273-5084
EMAIL: reg96@captiveaire.com

PATENT NUMBERS

EXHAUST HOODS ND-2/BD-2/SND-2 (CANADA) - CA PATENT 2520435 C.

HOOD INFORMATION – JOB#5226676

HOOD NO	TAG	MODEL	MANUFACTURER	LENGTH	MAX COOKING TEMP	TYPE	APPLIANCE DUTY	DESIGN CFM/FT	TOTAL EXH CFM	EXHAUST PLENUM FISER(S) WIDTH	LENG	HEIGHT	DIA	CFM	VEL	SP	HOOD CONSTRUCTION	HOOD CONFIG END TO END	ROW
1	Hood-Left	6024 ND-2	CAPTIVEAIRE	8' 6"	600 DEG	I	HEAVY	188	1600	10"	15"	4"		1600	1536	-0.566"	430 SS WHERE EXPOSED	LEFT	ALONE
2	Hood-Right	6024 ND-2	CAPTIVEAIRE	8' 0"	600 DEG	I	HEAVY	188	1500	10"	14"	4"		1500	1543	-0.537"	430 SS WHERE EXPOSED	RIGHT	ALONE
3	Dish Hood	5424 VHB-G-REM1	CAPTIVEAIRE	4' 0"	700 DEG	II	N/A	125	500			4"	8"	500	1432	-0.095"	430 SS 100%	ALONE	ALONE

HOOD INFORMATION

HOOD NO	TAG	FILTER(S) TYPE	QTY	HEIGHT	LENGTH	EFFICIENCY @ 7 MICRONS	LIGHT(S) QTY	TYPE	WIRE GUARD	UTILITY CABINET(S) LOCATION	SIZE	FIRE SYSTEM TYPE	SIZE	ELECTRICAL MODEL #	SWITCHES QUANTITY	FIRE SYSTEM PIPING	HOOD HANGING WEIGHT
1	Hood-Left	CAPTRATE SOLO FILTER	6	20"	16"	85% SEE FILTER SPEC	3	RECESSED ROUND	NO	LEFT	12"x60"x24"	TANK FS	4.0/4.0/4.0	DCV-1011	1 LIGHT 1 FAN	YES	971 LBS
2	Hood-Right	CAPTRATE SOLO FILTER	5	20"	16"	85% SEE FILTER SPEC	2	RECESSED ROUND	NO							YES	505 LBS
3	Dish Hood						0									NO	184 LBS

HOOD OPTIONS

HOOD NO	TAG	OPTION
1	Hood- Left	BALANCE DAMPERS.
		INSULATION FOR TOP OF HOOD.
		STRUCTURAL FRONT PANEL.
		RISER SENSOR INSTALL 6IN PLEN.
		LEFT VERTICAL END PANEL 27" TOP WIDTH, 21" BOTTOM WIDTH, 80" HIGH INSULATED 430 SS.
2	Hood-Right	BALANCE DAMPERS.
		INSULATION FOR TOP OF HOOD.
		RISER SENSOR INSTALL 6IN PLEN.
		RIGHT VERTICAL END PANEL 27" TOP WIDTH, 21" BOTTOM WIDTH, 80" HIGH INSULATED 430 SS.

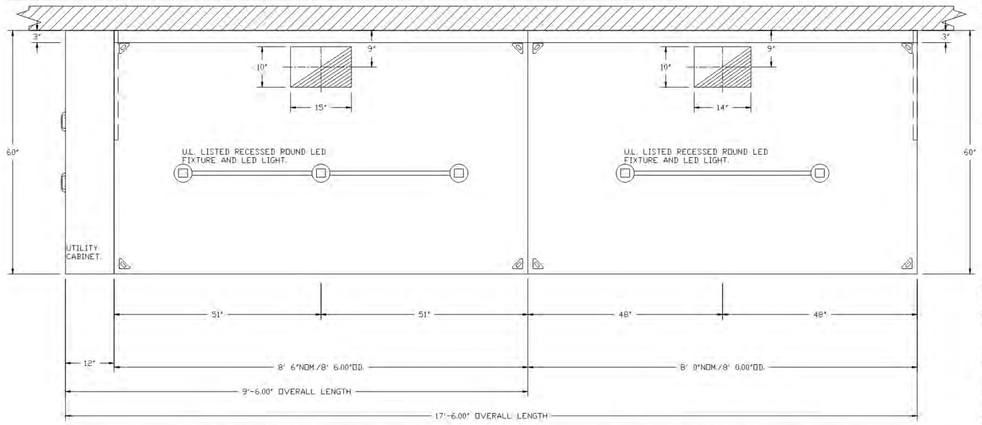

PLAN VIEW – HOOD #1 (Hood- Left)
8' 6.00" LONG 6024ND-2

PLAN VIEW – HOOD #2 (Hood-Right)
8' 0.00" LONG 6024ND-2

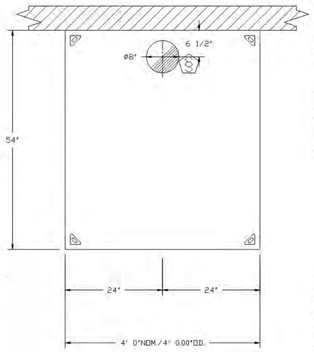

PLAN VIEW – HOOD #3 (Dish Hood)
4' 0.00" LONG 5424VHB-G-REM1

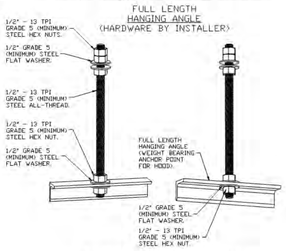

ASSEMBLY INSTRUCTIONS

HANGING ANGLE MUST BE SUPPORTED WITH 1/2" - 13 TPI GRADE 5 (MINIMUM) ALL-THREAD. SANDWICH HANGING ANGLES AND CEILING ANCHOR POINTS WITH 1/2" GRADE 5 (MINIMUM) STEEL FLAT WASHERS AND 1/2" - 13 TPI GRADE 5 (MINIMUM) HEX NUTS AS SHOWN. MUST USE DOUBLED HEX NUT CONFIGURATION ABOVE CEILING ANCHORS. SINGLE HEX NUT BENEATH HANGING ANGLE IS ACCEPTABLE FOR FULL LENGTH HANGING ANGLES. MAINTAIN 1/4" OF EXPOSED THREADS BENEATH BOTTOM HEX NUT. TORQUE ALL HEX NUTS TO 57 FT-LBS.

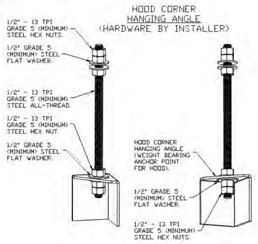

ASSEMBLY INSTRUCTIONS

HANGING ANGLE MUST BE SUPPORTED WITH 1/2" - 13 TPI GRADE 5 (MINIMUM) ALL-THREAD. SANDWICH HANGING ANGLES AND CEILING ANCHOR POINTS WITH 1/2" GRADE 5 (MINIMUM) STEEL FLAT WASHERS AND 1/2" - 13 TPI GRADE 5 (MINIMUM) HEX NUTS AS SHOWN. MUST USE DOUBLED HEX NUT CONFIGURATION BENEATH HOOD HANGING ANGLES AND ABOVE CEILING ANCHORS. MAINTAIN 1/4" OF EXPOSED THREADS BENEATH BOTTOM HEX NUT. TORQUE ALL HEX NUTS TO 57 FT-LBS.

SPECIFICATION: CAPTRATE• GREASE-STOP• SOLO FILTER

THE CAPTRATE GREASE-STOP SOLO FILTER IS A SINGLE-STAGE FILTER FEATURING A UNIQUE 3-BAFFLE DESIGN IN CONJUNCTION WITH A SLOTTED REAR BAFFLE DESIGN, TO DELIVER EXCEPTIONAL FILTRATION EFFICIENCY.

FILTER IS STAINLESS STEEL CONSTRUCTION, AND SIZED TO FIT INTO STANDARD 2-INCH DEEP HOOD CHANNEL(S).

UNITS SHALL INCLUDE STAINLESS STEEL HANDLES AND A FASTENING DEVICE TO SECURE THE TWO COMPONENTS WHEN ASSEMBLED.

GREASE EXTRACTION EFFICIENCY PERFORMANCE SHALL REMOVE AT LEAST 75% OF GREASE PARTICLES FIVE MICRONS IN SIZE, AND 85% GREASE PARTICLES SEVEN MICRONS IN SIZE AND LARGER, WITH A CORRESPONDING PRESSURE DROP NOT TO EXCEED 1.0 INCHES OF WATER GAUGE.

THE CAPTRATE GREASE-STOP SOLO WAS TESTED TO ASTM STANDARD ASTM F2519-05. MANUFACTURER APPROVED FOR USE IN SOLID FUEL APPLICATIONS AS A SPARK ARRESTER.

EFFICIENCY VS. PARTICLE DIAMETER

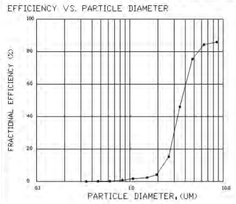

PRESSURE DROP VS. FLOW RATE

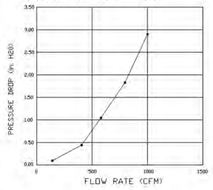

CAPTRATE FILTERS ARE BUILT IN COMPLIANCE WITH:
NFPA #96.
NSF STANDARD #2.
UL STANDARD #1046.
INT. MECH. CODE (IMC).
ULC-S649.

RUHNAU CLARKE ARCHITECTS

ORNESS DESIGN GROUP INC
FOODSERVICE DESIGN
5955 MIRA MESA BLVD. SUITE H
SAN DIEGO, CA. 92121
(858) 457-5955

IDENTIFICATION STAMP
DIV. OF THE STATE ARCHITECT
APP: 04-120895 INC:
REVIEWED FOR
SS ☑ FLS ☑ ACS ☑
DATE: 06/27/2022

REVISIONS

DESCRIPTION	CONSULTANT	DATE

CAPTIVEAIRE
www.captiveaire.com
San Diego Office
San Diego, CA. 92117 PHONE: (858) 273-5084 FAX: (919) 747-5615 EMAIL: reg96@captiveaire.com

Grossmont High School Rev3
1100 Murray Dr,
El Cajon, CA, 92020

DATE: 12/10/2021
DWG.#: 5226676
DRAWN BY:
SCALE: 3/4" = 1'-0"
MASTER DRAWING
SHEET NO. 1

GHS KITCHEN & WEIGHTROOM MOD: MARCH 1st DSA Submittal:

PROJECT No. :1-30-55
6/13/2022 7:47:50 AM

DRAWN BY: CHECKED BY:
ISSUE No.____ DATE____ DESCRIPTION____
REVISION No.____ DATE____ DESCRIPTION____

RUHNAUCLARKE.COM
3775 TENTH STREET, RIVERSIDE CALIFORNIA 92501 (951) 684 4664 / 5751 PALMER WAY, SUITE C, CARLSBAD CALIFORNIA 92010 (760) 438 5899

GHS KITCHEN & WEIGHTROOM MOD: MARCH 1st DSA Submittal
GROSSMONT HIGH SCHOOL
1100 MURRAY DR, EL CAJON, CA 92020

FOODSERVICE EXHAUST HOODS

K 8.1

1-30-55

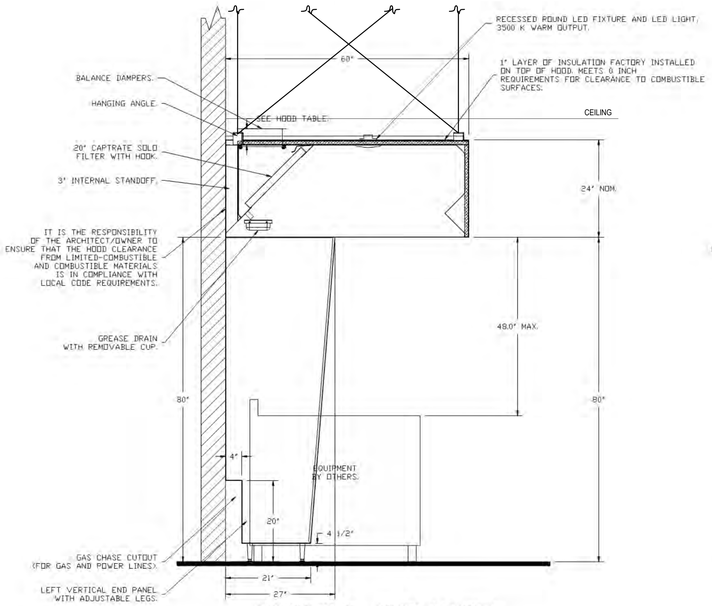

SECTION VIEW – MODEL 6024ND-2
HOOD – #1 (Hood- Left)

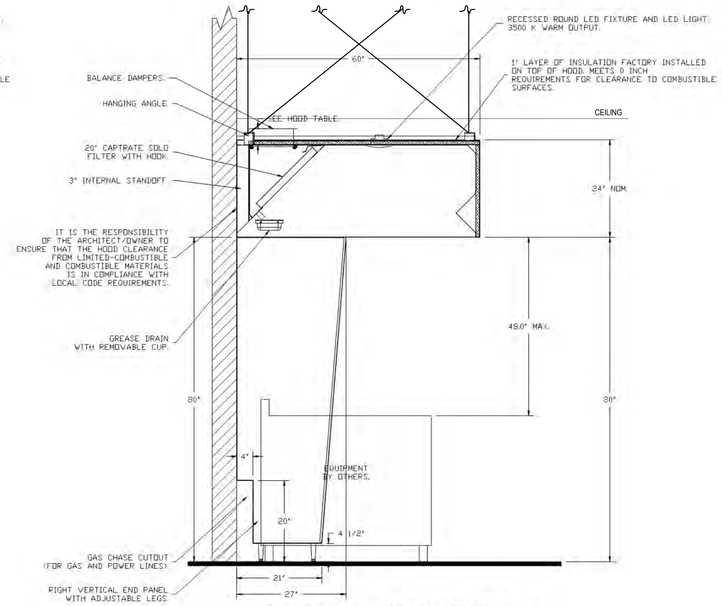

SECTION VIEW – MODEL 6024ND-2
HOOD – #2 (Hood-Right)

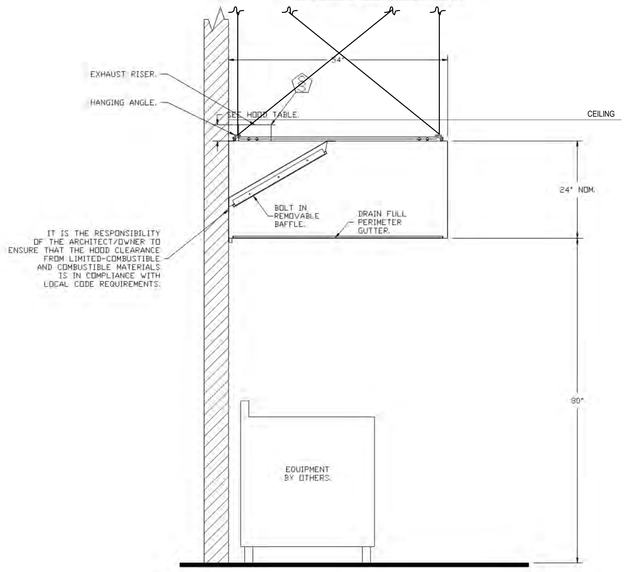

SECTION VIEW – MODEL 5424VHP-G-REM1
HOOD – #3 (Dish Hood)

NOTE: SEE HOOD HANGING AND LATERAL BRACING INFO ON 13 & 14/K-7.3

STAMPS

LICENSED ARCHITECT ROGER CLARKE No. C-21345 Exp. 12-31-2023 STATE OF CALIFORNIA

IDENTIFICATION STAMP
DIV. OF THE STATE ARCHITECT
APP: 04-120895 INC:
REVIEWED FOR
SS ☑ FLS ☑ ACS ☑
DATE: 06/27/2022
AGENCY
FILE NUMBER

RUHNAU CLARKE ARCHITECTS

ORNESS DESIGN GROUP INC
FOODSERVICE DESIGN
5955 MIRA MESA BLVD.
SUITE H
SAN DIEGO, CA. 92121
(858) 457-5955

REVISIONS

	DESCRIPTION	CONSULTANT	DATE	INITIAL
△				
△				
△				
△				

CAPTIVEAIRE
www.captiveaire.com
San Diego Office
, San Diego, CA. 92117 PHONE: (858) 273-5084 FAX: (619) 747-5615 EMAIL: reg96@captiveaire.com

Grossmont High School Rev3
1100 Murray Dr,
El Cajon, CA, 92020

DATE: 12/10/2021

DWG.#: 5226676

DRAWN BY:

SCALE: 3/4" = 1'-0"

MASTER DRAWING

SHEET NO. 2

GHS KITCHEN & WEIGHTROOM MOD: MARCH 1st DSA Submittal:

PROJECT No. :1-30-55
6/15/2022 1:26:40 PM

DRAWN BY: CHECKED BY:

ISSUE No.	DATE	DESCRIPTION	REVISION No.	DATE	DESCRIPTION
ISSUE No.	DATE	DESCRIPTION	REVISION No.	DATE	DESCRIPTION
ISSUE No.	DATE	DESCRIPTION	REVISION No.	DATE	DESCRIPTION
ISSUE No.	DATE	DESCRIPTION	REVISION No.	DATE	DESCRIPTION

STAMPS

LICENSED ARCHITECT ROGER CLARKE No. C-21345 Exp. 12-31-2023 STATE OF CALIFORNIA

IDENTIFICATION STAMP
DIV. OF THE STATE ARCHITECT
APP: 04-120895 INC:
REVIEWED FOR
SS ☑ FLS ☑ ACS ☑
DATE: 06/27/2022
ACCESSIBILITY
FIRE

ORNESS DESIGN GROUP INC
FOODSERVICE DESIGN
5955 MIRA MESA BLVD.
SUITE H
SAN DIEGO, CA. 92121
(858) 457-5955

RUHNAU
CLARKE
ARCHITECTS

FIRE SYSTEM INFORMATION – JOB#5226676

FIRE SYSTEM NO	TAG	TYPE	SIZE	FLOW POINTS	INSTALLATION	
					SYSTEM	LOCATION ON HOOD
1	FS-1	TANK FS	4.0/4.0/4.0	40	FIRE CABINET LEFT	LEFT, HOOD 1

GAS VALVE(S)

FIRE SYSTEM NO	TAG	TYPE	SIZE	SUPPLIED BY
1	FS-1	SC ELECTRICAL	2.000	CAPTIVEAIRE SYSTEMS

FIRE SYSTEM PARTS LIST KEY

FIRE SYSTEM NO	TAG	KEY NUMBER – PART DESCRIPTION	QTY BY FACTORY	QTY BY DIST
1	FS-1	0 – 0 – 12-F28021-32144-DT-360 DUCT FIRE THERMOSTAT WITH 12 FOOT WIRE LEADS. NO, CLOSE ON TEMP RISE AT 360°F.	2	0
		0 – 0 – 87-120042-001 SECONDARY ACTUATOR VALVE (SVA) – SINGLE ACTUATOR, REQUIRES PRIMARY RELEASE ACTUATOR, TANK FIRE SUPPRESSION.	2	0
		0 – 0 – 87-120045-001 HOSE, SECONDARY ACTUATOR HOSE, 7.5" BRAIDED STAINLESS STEEL, TANK FIRE SUPPRESSION.	2	0
		0 – 0 – 87-300001-001 TANK – PRESSURIZED TANK USED FOR TANK FIRE SUPPRESSION.	3	0
		0 – 0 – 87-300030-001 PRIMARY ACTUATOR KIT (PAK) – ACTUATOR AND RELEASE SOLENOID ASSEMBLY, ONE NEEDED PER FIRE SYSTEM, SUPERVISED, TANK FIRE SUPPRESSION.	1	0
		0 – 0 – 87-300033-001 DIN CONNECTOR, CANFIELD PART #5J560-201-EU0A, TANK FIRE SUPPRESSION, SUBMINATURE SOLENOID CONNECTION (CED VENDOR 30377).	1	0
		0 – 0 – 87-300152-001 HARDWARE, SVA BOLTS, TANK FIRE SUPPRESSION.	12	0
		0 – 0 – 98694A115 HARDWARE, DATANKLOCK LOCKING BRACKET SQUARE NUTS 5/16" ZINC, TANK FIRE SUPPRESSION.	6	0
		0 – 0 – A0034332 JUNCTION BOX FOR MANUAL PULL STATION. 1.5" DEEP BACK BOX, RED COLOR.	1	0
		0 – 0 – DATANKLOCK DISCHARGE ADAPTER TANK LOCKING PLATE FOR FIRE SYSTEM TANK INSTALLATION IN UTILITY CABINETS, TANK FIRE SUPPRESSION.	3	0
		0 – 0 – SLPCON-03FT SUPERVISED LOOP CONNECTION KIT. CONTAINS THE PARTS NEEDED TO CONNECT THE SUPERVISED LOOP BETWEEN END TO END HOODS WITH LESS THAN A 2' GAP. KIT CONTAINS 5 FEET OF BLACK MG WIRE, 5 FEET OF TAN MG WIRE, 3 FEET OF FLEXIBLE CONDUIT, AND TWO 7/8" CONNECTORS.	1	0
		0 – 0 – SLPCON-20FT SUPERVISED LOOP CONNECTION KIT. CONTAINS THE PARTS NEEDED TO CONNECT THE SUPERVISED LOOP BETWEEN HOODS WITH UPTO 19' GAP. KIT CONTAINS 22 FEET OF BLACK MG WIRE, 22 FEET OF TAN MG WIRE, 20 FEET OF FLEXIBLE CONDUIT, AND TWO 7/8" CONNECTORS.	1	0
		0 – 0 – TANK STRAP TANK STRAP – USED FOR TANK FIRE SUPPRESSION.	9	0
		0 – 0 – TFS-UCTANKBRACKET TANK BRACKET FOR FIRE SYSTEM TANK INSTALLATION IN UTILITY CABINETS, TANK FIRE SUPPRESSION.	3	0
		0 – 0 – WK-283952-000 DISCHARGE ADAPTER, TANK FIRE SUPPRESSION.	3	0
		34 – 34 – A0034331 24VDC SINGLE ACTION MANUAL ACTUATION DEVICE (PUSH/PULL STATION) WITH PROTECTIVE COVER, ONE (1) NORMALLY OPEN CONTACT. RED COLOR.	1	0
		ADDITIONAL PARTS TO BE DETERMINED...		

REVISIONS CONSULTANT BRANDING

	DESCRIPTION	DATE
△		
△		
△		
△		

CAPTIVEAIRE
www.captiveaire.com
San Diego Office
, San Diego, CA. 92117 PHONE: (858) 273-5084 FAX: (619) 747-5615 EMAIL: regi96@captiveaire.com

Grossmont High School Rev3
1100 Murray Dr,
El Cajon, CA, 92020

DATE: 12/10/2021

DWG.#: 5226676

DRAWN BY:

SCALE: 3/4" = 1'-0"

MASTER DRAWING

SHEET NO. 4

GHS KITCHEN & WEIGHTROOM MOD: MARCH 1st DSA Submittal:

PROJECT No. :1-30-55
6/13/2022 7:47:52 AM

DRAWN BY: CHECKED BY:
ISSUE No.____ DATE____ DESCRIPTION____ REVISION No.____ DATE____ DESCRIPTION____
ISSUE No.____ DATE____ DESCRIPTION____ REVISION No.____ DATE____ DESCRIPTION____
ISSUE No.____ DATE____ DESCRIPTION____ REVISION No.____ DATE____ DESCRIPTION____
ISSUE No.____ DATE____ DESCRIPTION____ REVISION No.____ DATE____ DESCRIPTION____

RUHNAUCLARKE.COM
3775 TENTH STREET, RIVERSIDE CALIFORNIA 92501 (951) 684 4664 / 5751 PALMER WAY, SUITE C, CARLSBAD CALIFORNIA 92010 (760) 438 5899

GHS KITCHEN & WEIGHTROOM MOD: MARCH 1st DSA Submittal
GROSSMONT HIGH SCHOOL
1100 MURRAY DR, EL CAJON, CA 92020

FOODSERVICE EXHAUST HOODS

K 8.3

1-30-55

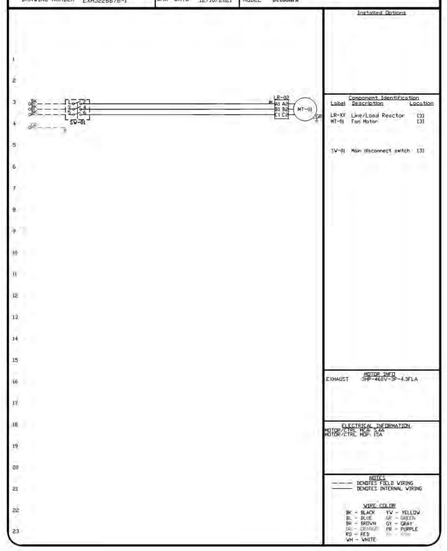

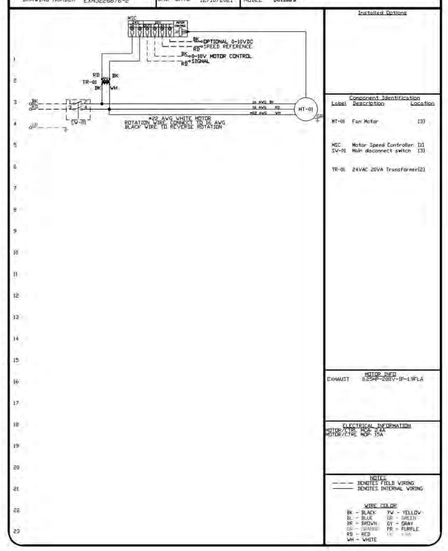

STAMPS

IDENTIFICATION STAMP
DIV. OF THE STATE ARCHITECT
APP: 04-120895 INC:
REVIEWED FOR
SS ☑ FLS ☑ ACS ☑
DATE: 06/27/2022

RUHNAU CLARKE ARCHITECTS

ORNESS DESIGN GROUP INC
FOODSERVICE DESIGN
5955 MIRA MESA BLVD.
SUITE H
SAN DIEGO, CA, 92121
(858) 457-5955

REVISIONS

DESCRIPTION	CONSULTANT	DRAWING
△		
△		
△		
△		

CAPTIVEAIRE
www.captiveaire.com
San Diego Office
San Diego, CA, 92117 PHONE: (858) 273-5084 FAX: (919) 747-5615 EMAIL: reg96@captiveaire.com

Grossmont High School Rev3
1100 Murray Dr,
El Cajon, CA, 92020

DATE: 12/10/2021
DWG.#: 5226676
DRAWN BY:
SCALE: 3/4" = 1'-0"
MASTER DRAWING
SHEET NO. 11

GHS KITCHEN & WEIGHTROOM MOD: MARCH 1st DSA Submittal:

PROJECT No. :1-30-55
6/13/2022 7:47:53 AM

DRAWN BY: CHECKED BY:
ISSUE No. DATE DESCRIPTION
ISSUE No. DATE DESCRIPTION
ISSUE No. DATE DESCRIPTION
ISSUE No. DATE DESCRIPTION
REVISION No. DATE DESCRIPTION
REVISION No. DATE DESCRIPTION
REVISION No. DATE DESCRIPTION
REVISION No. DATE DESCRIPTION

RUHNAUCLARKE.COM
3775 TENTH STREET, RIVERSIDE CALIFORNIA 92501 (951) 684 4664 / 5751 PALMER WAY, SUITE C, CARLSBAD CALIFORNIA 92010 (60) 438 5899

GHS KITCHEN & WEIGHTROOM MOD: MARCH 1st DSA Submittal
GROSSMONT HIGH SCHOOL
1100 MURRAY DR, EL CAJON, CA 92020

FOODSERVICE EXHAUST HOODS

K 8.4

1-30-55

STAMPS

IDENTIFICATION STAMP
DIV. OF THE STATE ARCHITECT
APP: 04-120895 INC:
REVIEWED FOR
SS ☑ FLS ☑ ACS ☑
DATE: 06/27/2022

ORNESS DESIGN GROUP INC
FOODSERVICE DESIGN
5955 MIRA MESA BLVD.
SUITE H
SAN DIEGO, CA. 92121
(858) 457-5955

RUHNAU CLARKE ARCHITECTS

ELECTRICAL PACKAGE – JOB#5226676

NO	TAG	PACKAGE #	LOCATION	SWITCHES LOCATION	SWITCHES QUANTITY	OPTION	FANS CONTROLLED FAN TAG	TYPE	Φ	HP	VOLT	FLA
1		DCV-1011	UTILITY CABINET LEFT	G3 – UTILITY CABINET LEFT	1 LIGHT	SMART CONTROLS DCV	KEF-1.	EXHAUST	3	3.000	460	4.3
				HOOD # 1	1 FAN							

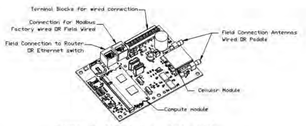

CASlink Monitor and Control

- *Hood control panel to support communications to cloud-based Building Management System.*
- *Hood Control Panel to allow cloud-based Building Management System to monitor real time parameters outlined as MONITOR in the points list.*
- *Hood Control Panel to allow cloud-based Building Management System to control parameters outlined as CONTROL in the points list.*
- *Hood Control Panel to allow cloud-based Building Management System to implement SYSTEM ECONOMIZER control strategies for fully integrated Building Management.*

MONITORING AND CONTROL POINTS LIST

DCV Packages	Function
Room Temperature	MONITOR
Duct Temperature(s)	MONITOR
MUA Discharge Temperature	MONITOR
Kitchen RTU Discharge Temperature	MONITOR
Fan Speed	MONITOR
Fan Amperage	MONITOR
Fan Power	MONITOR
VFD Faults	MONITOR
Controller Faults	MONITOR
Fan Faults	MONITOR
Fan Status	MONITOR
PCU Faults	MONITOR
PCU Filter Clog Percentages	MONITOR
Fire Condition	MONITOR
UL300 Fire System	MONITOR
Building Pressure	MONITOR
Prep Time Button	MONITOR & CONTROL
Fans Button	MONITOR & CONTROL
Lights Button	MONITOR & CONTROL
Wash Button	MONITOR & CONTROL

SC Packages	Function
Room Temperature(s)	MONITOR
Duct Temperature(s)	MONITOR
MUA Discharge Temperature	MONITOR
Kitchen RTU Discharge Temperature	MONITOR
Controller Faults	MONITOR
Fan Faults	MONITOR
Fan Status	MONITOR
PCU Faults	MONITOR
PCU Filter Clog Percentages	MONITOR
Fire Condition	MONITOR
UL300 Fire System	MONITOR
Building Pressure	MONITOR
Fans Button(s)	MONITOR & CONTROL
Lights Button(s)	MONITOR & CONTROL
Wash Button	MONITOR & CONTROL

JOB NO 5226676 | MODEL NUMBER DCV-1011 | JOB NAME Grossmont High School Rev3 | DRAWN BY: | DATE 12/10/2021 | SCHEMATIC TYPE INSTALL | DWG NO ECP #1-1

DESCRIPTION OF OPERATION:
Demand Control Ventilation, w/ capture for 1 Exhaust Fan; Exhaust on in fire, lights out in fire, fans modulate based on duct temperature. INVERTER DUTY 3 PHASE MOTOR REQUIRED FOR USE WITH VFD. Room temperature sensor shipped loose for field installation/verify distance between VFD and Motor; additional cost could apply if distance shipped loose.

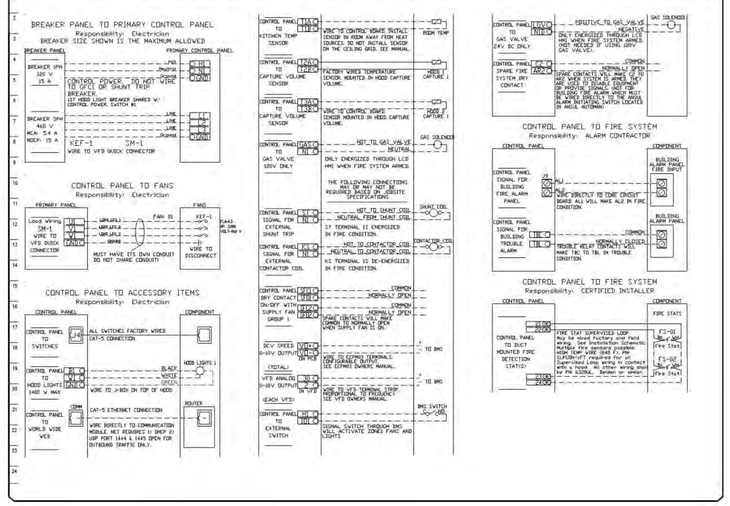

JOB NO 5226676 | MODEL NUMBER DCV-1011 | JOB NAME Grossmont High School Rev3 | DRAWN BY: | DATE 12/10/2021 | SCHEMATIC TYPE INSTALL | DWG NO ECP #1-2

DESCRIPTION OF OPERATION:
Demand Control Ventilation, w/ capture for 1 Exhaust Fan; Exhaust on in fire, lights out in fire, fans modulate based on duct temperature. INVERTER DUTY 3 PHASE MOTOR REQUIRED FOR USE WITH VFD. Room temperature sensor shipped loose for field installation/verify distance between VFD and Motor; additional cost could apply if distance shipped loose.

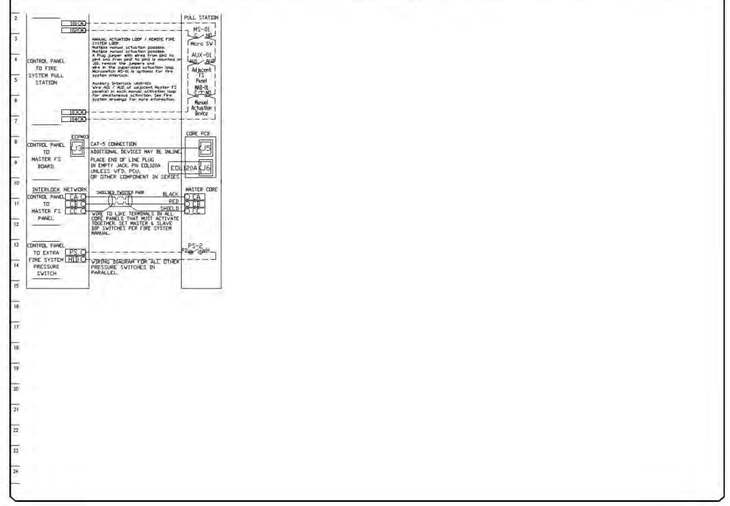

JOB NO 5226676 | MODEL NUMBER DCV-1011 | JOB NAME Grossmont High School Rev3 | DRAWN BY: | DATE 12/10/2021 | SCHEMATIC TYPE INSTALL | DWG NO ECP #1-3

DESCRIPTION OF OPERATION:
Fire System #1 Tank #1 – Kitchen (Fs-1) Tankless Fire Protection System equipped with Electronic Detection utilizing CORE board as a Latched Release Mechanism. Installed in hood Utility Cabinet with integral hood prepare panel.

TANK PROTECTION ELECTRICAL DETAIL

02/10/2021 Rev. 2

FS-1: MASTER

ELECTRICIAN
1. WIRE MAIN CONTROL PANEL PER INCLUDED SCHEMATIC
2. WIRE ALL FANS PER INCLUDED SCHEMATIC
3. WIRE SHUNT TRIP BREAKER (OPTIONAL)
4. WIRE GAS APPLIANCE KILL SWITCH, IF EQUIPPED (OPTIONAL)
5. WIRE GAS VALVE

ELECTRICAL CONTRACTOR REQUIREMENT

ITEM	CONNECTION IN PANEL	CONNECTION IN DEVICE	VOLTAGE	AMPERAGE	COMMENTS
SHUNT TRIP BREAKER (OPTIONAL)	ST & N1	BREAKER COIL (N1 & A2)	120 VAC	< 4 AMPS	ST TO A1 ON SHUNT BREAKER COIL, AND NEUTRAL TO A2 ON SHUNT TRIP BREAKER COIL
CONTROL PANEL POWER	H1 & N1 + GROUND	CIRCUIT BREAKER	120 VAC	15 AMPS	CONTROL PANEL POWER MUST NOT BE RUN THROUGH SHUNT TRIP BREAKER
120S APPLIANCE KILL SWITCH (OPTIONAL)	KTS & N1	KTS & N1	120 VAC	< 4 AMPS	KILL SWITCH TERMINALS MUST BE IN SERIES WITH OTHER KILL SWITCHES
REMOTE 120VAC ANSUL AUTOMAN (OPTIONAL)	AUE, AUE	SOLENOID	120 VAC	< .6 AMPS	120V TO AUE, AUE TO ANSUL ELECTRIC AUTOMAN, ANSUL SOLENOID TO NEUTRAL
GAS VALVE	12V & REF OF 24 VDC/ GAS & N1 OF 120 VAC	RED/WHITE/GREEN	24 VDC OR 120 VAC	< 1.0 AMPS	IF 24 VDC - 2 WIRES & GROUND; RED TO RED, 12V TO RED, AND GREEN TO GROUND. IF 120 VAC - 3 WIRES & GROUND; GAS TO RED, N1 TO BLK, AND GREEN TO GROUND.

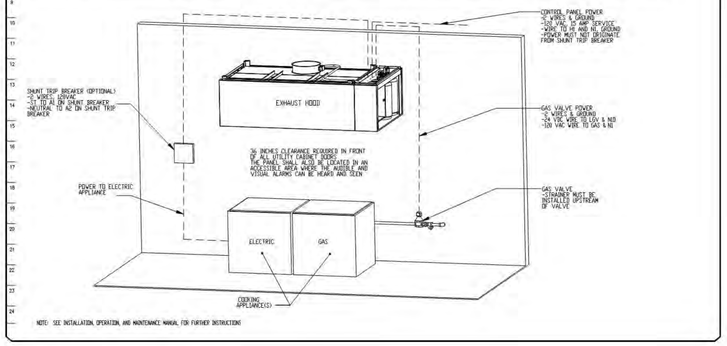

NOTE: SEE INSTALLATION, OPERATION, AND MAINTENANCE MANUAL FOR FURTHER INSTRUCTIONS

JOB NO 5226676 | MODEL NUMBER DCV-1011 | JOB NAME Grossmont High School Rev3 | DRAWN BY: | DATE 12/10/2021 | SCHEMATIC TYPE INSTALL | DWG NO ECP #1-4

DESCRIPTION OF OPERATION:
Fire System #1 Tank #1 – Kitchen (Fs-1) Tankless Fire Protection System equipped with Electronic Detection utilizing CORE board as a Latched Release Mechanism. Installed in hood Utility Cabinet with integral hood prepare panel.

TANK PROTECTION LOW-VOLTAGE DETAIL

02/10/2021 Rev. 2

FS-1: MASTER

ALARM CONTRACTOR
1. WIRE MANUAL ACTUATION DEVICE(S), REMOTE FIRESTAT(S), CORE INTERLOCK(S), FIRE SENSOR(S) AND FIRE ALARM CONTACTS
2. COMPLETE FUNCTIONAL WALKUP OF SYSTEM
3. VERIFY FINAL FIRE SYSTEM TEST

ALARM CONTRACTOR REQUIREMENT

ITEM	CONNECTION IN PANEL	CONNECTION ON DEVICE	VOLTAGE	AMPERAGE	COMMENTS
MANUAL ACTUATION DEVICE(S)	101 AND 104 102 AND 103	1 & 2	24 VDC	< 1.0 AMPS	WIRE MANUAL ACTUATION DEVICE TERMINAL 1 BETWEEN CORE PANEL TERMINALS 101 AND 103 WIRE MANUAL ACTUATION DEVICE TERMINAL 2 BETWEEN CORE PANEL TERMINALS 102 AND 104 JUMPER 101 TO 104 AND 102 TO 103 IF NO MANUAL ACTUATION DEVICES ARE INSTALLED
MANUAL ACTUATION DEVICE COVER	N/A	N/A	N/A	N/A	MANUAL ACTUATION DEVICE COVER MUST BE INSTALLED IF COVER MOUNTED FOR OUTDOOR EXPOSURE (RAIN, SNOW, ETC)
REMOTE (FIRESTAT SENSOR(S))	21 AND 24 22 AND 23	BLACK AND WHITE	24 VDC	< 1.0 AMPS	WIRE FIRE SENSOR BLACK WIRE BETWEEN CORE PANEL TERMINALS 22 AND 23 WIRE FIRE SENSOR BLACK WIRE BETWEEN CORE PANEL TERMINALS 21 AND 24 HIGH TEMP (94°F) ACCUMASTAT (WITH A BCVAMASTER DELAYCORE OR SIMILAR ONLY IF FAN OVER TOP OF HOOD, OTHERWISE BELDEN 8600RA OR SIMILAR ZELDEN RATED WIRE) - SEE FIGURE 1
FIRE ALARM CONTACT	AL1, AL2	VARIES	30V MAX (AC/DC)	UP TO 1 AMP	FIRE ALARM RELAY CONTACTS FOR BUILDING FIRE ALARM LOCATED IN THE CORE ELECTRICAL CONTROL PANEL
CORE INTERLOCK(S)	IL4, IL3, IL2	IL4, IL3, IL2	RS-485 COMMUNICATIONS SIGNAL		CORE SYSTEM (1) IL4, TO CORE SYSTEM (2) IL4; CORE SYSTEM (1) IL3, TO CORE SYSTEM (2) IL3; CORE SYSTEM (1) IL2, TO CORE SYSTEM (2) IL2; USE BELDEN 88760 OR SIMILAR WIRE
TROUBLE CONTACT	TBC, TBL, TOK	VARIES	MAX 120 VAC	UP TO 6 AMPS	WIRE TO TBL & TBC NORMALLY OPEN CONTACT, CLOSES IN TROUBLE CONDITION
CORE COMMUNICATIONS CABLE	RJ-45 Jack	INTERNET CONNECTION	SIGNAL	<1.0 AMPS	TYPICAL CONNECTION CAT5 CABLE TO LOCAL AREA NETWORK VIA ETHERNET SWITCH OR WIRELESS ROUTER WITH VALID INTERNET CONNECTION

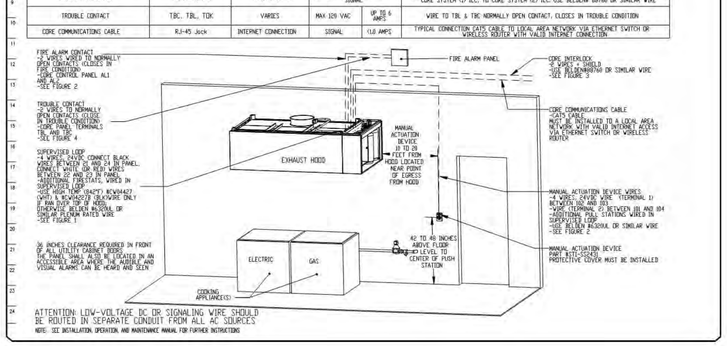

ATTENTION: LOW-VOLTAGE DC OR SIGNALING WIRE SHOULD BE ROUTED IN SEPARATE CONDUIT FROM ALL AC SOURCES

NOTE: SEE INSTALLATION, OPERATION, AND MAINTENANCE MANUAL FOR FURTHER INSTRUCTIONS

REVISIONS

DESCRIPTION	DATE
△	
△	
△	
△	

CAPTIVEAIRE
www.captiveaire.com
San Diego Office
... San Diego, CA 92117 PHONE: (858) 273-5084 FAX: (919) 747-5615 EMAIL: regs6@captiveaire.com

Grossmont High School Rev3
1100 Murray Dr,
El Cajon, CA, 92020

DATE: 12/10/2021

DWG.#: 5226676

DRAWN BY:

SCALE: 3/4" = 1'-0"

MASTER DRAWING

SHEET NO. 13

GHS KITCHEN & WEIGHTROOM MOD: MARCH 1st DSA Submittal:

PROJECT No. :1-30-55
6/13/2022 7:47:55 AM

DRAWN BY: ____ CHECKED BY: ____

ISSUE No.____ DATE____ DESCRIPTION____ REVISION No.____ DATE____ DESCRIPTION____
ISSUE No.____ DATE____ DESCRIPTION____ REVISION No.____ DATE____ DESCRIPTION____
ISSUE No.____ DATE____ DESCRIPTION____ REVISION No.____ DATE____ DESCRIPTION____
ISSUE No.____ DATE____ DESCRIPTION____ REVISION No.____ DATE____ DESCRIPTION____

RUHNAUCLARKE.COM
3775 TENTH STREET, RIVERSIDE CALIFORNIA 92501 (951) 684 4664 / 5751 PALMER WAY, SUITE C, CARLSBAD CALIFORNIA 92010 (760) 438 5899

GHS KITCHEN & WEIGHTROOM MOD: MARCH 1st DSA Submittal
GROSSMONT HIGH SCHOOL
1100 MURRAY DR, EL CAJON, CA 92020

FOODSERVICE EXHAUST HOODS

K 8.5

1-30-55

STAMPS

LICENSED ARCHITECT — ROGER CLARKE — No. C-21345 — Exp. 12-31-2023 — STATE OF CALIFORNIA

IDENTIFICATION STAMP
DIV. OF THE STATE ARCHITECT
APP: 04-120895 INC:
REVIEWED FOR
SS ☑ FLS ☑ ACS ☑
DATE: 06/27/2022
AGENCY
FILE NUMBER

RUHNAU CLARKE ARCHITECTS

ORNESS DESIGN GROUP INC
FOODSERVICE DESIGN
5955 MIRA MESA BLVD.
SUITE H
SAN DIEGO, CA. 92121
(858) 457-5955

JOB NO	MODEL NUMBER	DRAWN BY	SCHEMATIC TYPE: INSTALL	DESCRIPTION OF OPERATION
5226676	DCV-1011	DATE 12/14/2021	LINE NO. ECP, ALUM.	Fire System #1 TANK FS - 42243A42 Hybrid Tank-mounted Fire Protection System equipped with Electronic Detection utilizing CORE hood as a Lethal Release Mechanism. Contained in Hood Utility Cabinet with integral hood preamp panel

JOB NAME: Grossmont High School Rev3

TANK PROTECTION LOW-VOLTAGE FIGURES

02/10/2021 Rev. 17

FS-1: MASTER

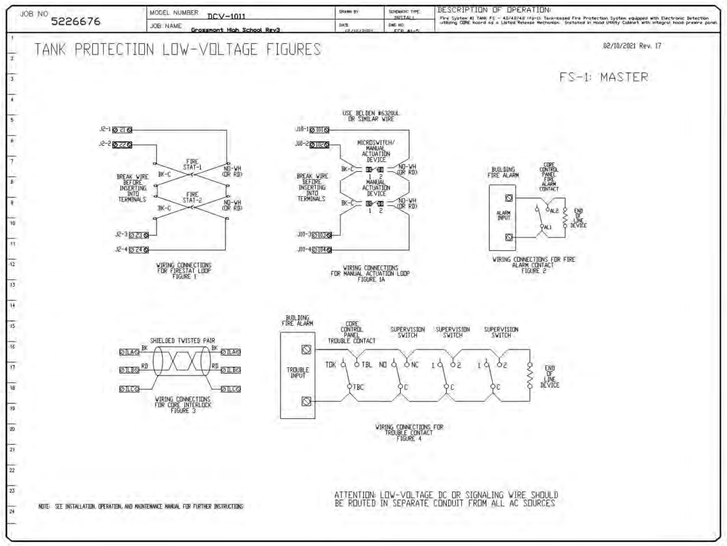

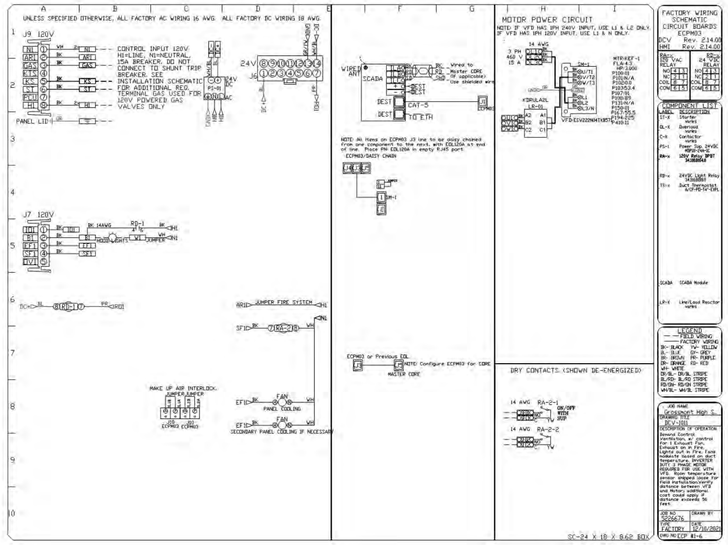

FACTORY WIRING SCHEMATIC CIRCUIT BOARD(S) ECPM03
DCV Rev. 214.00
HMI Rev. 214.00

COMPONENT LIST

LEGEND
FIELD WIRING
FACTORY WIRING
BK= BLACK GY= GRAY
BL= BLUE OR= ORANGE
BR= BROWN PK= PURPLE
GR= GREEN RD= RED
OR/BL= OR/BL STRIPE
BL/RD= BL/RD STRIPE
BR/GR= BR/GR STRIPE
WH/BL= WH/BL STRIPE

JOB NAME: Grossmont High S.
JOB NO: 5226676
DRAWN BY: DCV-1011
DESCRIPTION OF OPERATION
General Control Schematic for control for 1 Exhaust Fan. Should be in fire. Fire System #1 TANK FS - 42243A42 Hybrid Tank-based Fire Protection System equipped with Electronic Detection utilizing CORE hood as a Lethal Release Mechanism. Contained in Hood Utility Cabinet with integral hood preamp panel.
FACTORY 12/10/2021
DWG NO ECP 01-6

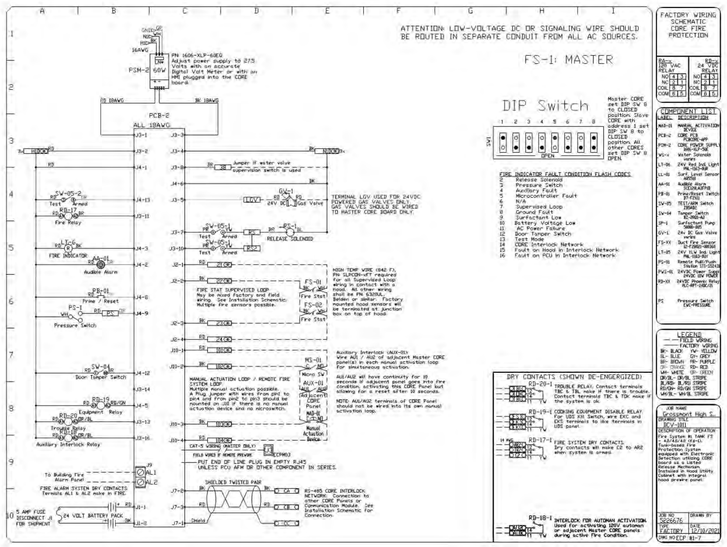

FACTORY WIRING SCHEMATIC CORE FIRE PROTECTION

COMPONENT LIST

LEGEND
FIELD WIRING
FACTORY WIRING
BK= BLACK GY= GRAY
BL= BLUE OR= ORANGE
BR= BROWN PK= PURPLE
GR= GREEN RD= RED
OR/BL= OR/BL STRIPE
BL/RD= BL/RD STRIPE
BR/GR= BR/GR STRIPE
WH/BL= WH/BL STRIPE

JOB NAME: Grossmont High S.
JOB NO: 5226676
DRAWN BY: DCV-1011
DESCRIPTION OF OPERATION
Fire System #1 TANK FS - 42243A42 Hybrid Tank-based Fire Protection System equipped with Electronic Detection utilizing CORE hood as a Lethal Release Mechanism. Contained in Hood Utility Cabinet with integral hood preamp panel.
FACTORY 12/10/2021
DWG NO ECP 01-7

REVISIONS

DESCRIPTION	CONSULTANT	SPONSORS

CAPTIVEAIRE
www.captiveaire.com
San Diego Office
San Diego, CA. 92117 PHONE: (858) 273-5084 FAX: (919) 747-5615 EMAIL: reg96@captiveaire.com

Grossmont High School Rev3
1100 Murray Dr.
El Cajon, CA. 92020

DATE: 12/10/2021

DWG.#: 5226676

DRAWN BY:

SCALE: 3/4" = 1'-0"

MASTER DRAWING

SHEET NO. 14

GHS KITCHEN & WEIGHTROOM MOD: MARCH 1st DSA Submittal:

PROJECT No. :1-30-55
6/13/2022 7:47:56 AM

DRAWN BY: CHECKED BY:

ISSUE No.	DATE	DESCRIPTION	REVISION No.	DATE	DESCRIPTION
ISSUE No.	DATE	DESCRIPTION	REVISION No.	DATE	DESCRIPTION
ISSUE No.	DATE	DESCRIPTION	REVISION No.	DATE	DESCRIPTION
ISSUE No.	DATE	DESCRIPTION	REVISION No.	DATE	DESCRIPTION

STAMPS

LICENSED ARCHITECT ROGER CLARKE No. C-21345 Exp. 12-31-2023 STATE OF CALIFORNIA

IDENTIFICATION STAMP
DIV. OF THE STATE ARCHITECT
APP: 04-120895 INC:
REVIEWED FOR
SS ☑ FLS ☑ ACS ☑
DATE: 06/27/2022
ACCESSIBILITY
FOR DSA

ORNESS DESIGN GROUP INC
FOODSERVICE DESIGN
5955 MIRA MESA BLVD.
SUITE H
SAN DIEGO, CA. 92121
(858) 457-5955

RUHNAU
CLARKE
ARCHITECTS

DEMAND CONTROL VENTILATION HOOD CONTROL PANEL SPECIFICATIONS:

- CONTROLS SHALL BE LISTED BY ETL (UL 508A) AND SHALL COMPLY WITH DEMAND VENTILATION SYSTEM TURNDOWN REQUIREMENTS OUTLINED IN IECC 403.2.8 (2015).
- THE CONTROL ENCLOSURE SHALL BE NEMA 1 RATED AND LISTED FOR INSTALLATION INSIDE OF THE EXHAUST HOOD UTILITY CABINET. THE CONTROL ENCLOSURE MAY BE CONSTRUCTED OF STAINLESS STEEL OR PAINTED STEEL.
- TEMPERATURE PROBE(S) LOCATED IN THE EXHAUST DUCT RISER(S) SHALL BE CONSTRUCTED OF STAINLESS STEEL.
- A DIGITAL CONTROLLER SHALL BE PROVIDED TO ACTIVATE THE HOOD EXHAUST FANS DYNAMICALLY BASED ON A FIXED DIFFERENTIAL BETWEEN THE AMBIENT AND DUCT TEMPERATURES SENSORS. THIS FUNCTION SHALL MEET THE REQUIREMENTS OF IMC 507.1.1.
- A DIGITAL CONTROLLER SHALL PROVIDE ADJUSTABLE HYSTERESIS SETTINGS TO PREVENT CYCLING OF THE FANS AFTER THE COOKING APPLIANCES HAVE BEEN TURNED OFF AND/OR THE HEAT IN THE EXHAUST SYSTEM IS REDUCED.
- A DIGITAL CONTROLLER SHALL PROVIDE AN ADJUSTABLE MINIMUM FAN RUN-TIME SETTING TO PREVENT FAN CYCLING.
- VARIABLE FREQUENCY DRIVES (VFDS) SHALL BE PROVIDED FOR FANS AS REQUIRED. THE DIGITAL CONTROLLER SHALL MODULATE THE VFDS BETWEEN A MINIMUM SETPOINT AND A MAXIMUM SETPOINT ON DEMAND. THE DUCT TEMPERATURE SENSOR INPUT(S) TO THE DIGITAL CONTROLLER SHALL BE USED TO CALCULATE THE SPEED REFERENCE SIGNAL.
- THE VFD SPEED RANGE OF OPERATION SHALL BE FROM 0% TO 100% FOR THE SYSTEM, WITH THE ACTUAL MINIMUM SPEED SET AS REQUIRED TO MEET MINIMUM VENTILATION REQUIREMENTS.
- AN INTERNAL ALGORITHM TO THE DIGITAL CONTROLLER SHALL MODULATE SUPPLY FAN VFD SPEED PROPORTIONAL TO ALL EXHAUST FANS THAT ARE LOCATED IN THE SAME FAN GROUP AS THE SUPPLY FAN.
- THE SYSTEM SHALL OPERATE IN PREP MODE DURING LIGHT COOKING LOAD OR COOL DOWN MODE WHEN SUFFICIENT HEAT REMAINS UNDERNEATH THE HOOD SYSTEM AFTER COOKING OPERATIONS HAVE COMPLETED. OPERATION DURING EITHER OF THESE PERIODS WILL DISABLE THE SUPPLY FANS AND PROVIDE AN EXHAUST FAN SPEED THAT IS EQUAL TO THE MINIMUM VENTILATION REQUIREMENT.
- A DIGITAL CONTROLLER SHALL DISABLE THE SUPPLY FAN(S), ACTIVATE THE EXHAUST FAN(S), ACTIVATE THE APPLIANCE SHUNT TRIP, AND DISABLE AN ELECTRIC GAS VALVE AUTOMATICALLY WHEN FIRE CONDITION IS DETECTED ON A COVERED HOOD.
- A DIGITAL CONTROLLER SHALL ALLOW FOR EXTERNAL BMS FAN CONTROL VIA DRY CONTACT (EXTERNAL CONTROL SHALL NOT OVERRIDE FAN OPERATION LOGIC AS REQUIRED BY CODE).
- AN LCD INTERFACE SHALL BE PROVIDED WITH THE FOLLOWING FEATURES:
  - A. ON/OFF PUSH BUTTON FAN & LIGHT SWITCH ACTIVATION.
  - B. INTEGRATED GAS VALVE RESET FOR ELECTRONIC GAS VALVES (NO RESET RELAY REQUIRED).
  - C. VFD FAULT DISPLAY WITH AUDIBLE & VISUAL ALARM NOTIFICATION.
  - D. DUCT TEMPERATURE SENSOR FAILURE DETECTION WITH AUDIBLE & VISUAL ALARM NOTIFICATION.
  - E. MIS-WIRED DUCT TEMPERATURE SENSOR DETECTION WITH AUDIBLE & VISUAL ALARM NOTIFICATION.
  - F. A SINGLE LOW VOLTAGE CAT-5 RJ45 WIRING CONNECTION.
  - G. AN ENERGY SAVINGS INDICATOR THAT UTILIZES MEASURED KWH FROM THE VFDS.

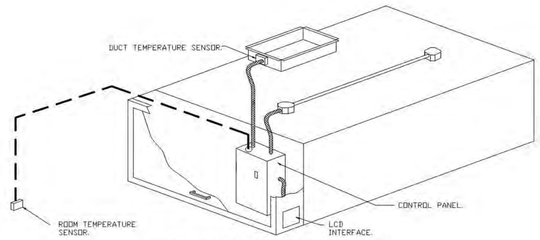

TYPICAL HOOD CONTROL PANEL INSTALLATION

SEQUENCE OF OPERATIONS:

THE HOOD CONTROL PANEL IS CAPABLE OF OPERATING IN ONE OR MORE OF THE FOLLOWING STATES AT ANY GIVEN TIME:

- AUTOMATIC: THE SYSTEM OPERATES BASED ON THE DIFFERENTIAL BETWEEN ROOM TEMPERATURE AND THE TEMPERATURE AT THE HOOD CAVITY OR EXHAUST DUCT COLLAR. FANS ACTIVATE AT A CONFIGURABLE TEMPERATURE DIFFERENTIAL THRESHOLD. DEPENDING ON THE JOB CONFIGURATION EACH FAN ZONE CAN BE CONFIGURED AS STATIC OR DYNAMIC. THESE TERMS REFER TO WHETHER A VARIABLE MOTOR (SUCH AS EC MOTORS OR VFD DRIVEN MOTORS) MODULATE WITH TEMPERATURE. IF THE PANEL IS EQUIPPED WITH VARIABLE SPEED FANS AND THE ZONE IS DEFINED AS "DYNAMIC", THESE WILL MODULATE WITHIN A USER-DEFINED RANGE BASED ON THE TEMPERATURE DIFFERENTIAL. PANELS EQUIPPED WITH VARIABLE SPEED FANS AND A FAN ZONE DEFINED AS "STATIC", FANS WILL RUN AT A SET SPEED CALCULATED FOR THE DRIVE. DEMAND CONTROL VENTILATION SYSTEMS ARE CAPABLE OF MODULATING EXHAUST AND MAKE UP AIR FAN SPEEDS PER THE REQUIREMENTS OUTLINED IN IECC 403.2.8.
- MANUAL: THE SYSTEM OPERATES BASED ON HUMAN INPUT FROM AN HMI.
- SCHEDULE: A WEEKLY SCHEDULE CAN BE SET TO RUN FANS FOR A SPECIFIED PERIOD THROUGHOUT THE DAY. THERE ARE THREE OCCUPIED TIMES PER DAY TO ALLOW FOR THE USER TO SET UP A TIME THAT IS SUITABLE TO THEIR NEEDS. ANY TIME THAT IS WITHIN THE DEFINED OCCUPIED TIME, THE SYSTEM WILL RUN AT MODULATION MODE AND FOLLOW THE FAN PROCEDURE ALGORITHM BASED ON TEMPERATURE DURING THIS TIME. DURING UNOCCUPIED TIME, THE SYSTEM WILL HAVE AN EXTRA OFFSET TO PREVENT UNINTENDED ACTIVATION OF THE SYSTEM DURING A TIME WHERE THE SYSTEM IS NOT BEING OCCUPIED.
- OTHER: THE SYSTEM OPERATES BASED ON THE INPUT FROM AN EXTERNAL SOURCE (DDC, BMS OR HARD-WIRED INTERLOCK).
- FIRE: UPON ACTIVATION OF THE HOOD FIRE SUPPRESSION SYSTEM, THE EXHAUST FAN WILL COME ON OR CONTINUE TO TO RUN, THE HOOD MAKEUP AIR WILL SHUTDOWN, AND A SIGNAL WILL BE SENT FOR ACTIVATING THE SHUNT TRIP BREAKER PROVIDED BY THE ELECTRICIAN. FUEL GAS WILL SHUT OFF VIA A MECHANICAL/ELECTRICAL GAS VALVE ACTUATED BY THE HOOD FIRE SUPPRESSION SYSTEM.

SYSTEM DESIGN VERIFICATION (SDV)

IF ORDERED, CAS SERVICE WILL PERFORM A SYSTEM DESIGN VERIFICATION (SDV) ONCE ALL EQUIPMENT HAS HAD A COMPLETE START UP PER THE OPERATION AND INSTALLATION MANUAL. TYPICALLY, THE SDV WILL BE PERFORMED AFTER ALL INSPECTIONS ARE COMPLETE.

ANY FIELD RELATED DISCREPANCIES THAT ARE DISCOVERED DURING THE SDV WILL BE BROUGHT TO THE
ATTENTION OF THE GENERAL CONTRACTOR AND CORRESPONDING TRADES ON SITE. THESE ISSUES WILL BE DOCUMENTED AND FORWARDED TO THE APPROPRIATE SALES OFFICE. IF CAS SERVICE HAS TO
RESOLVE A DISCREPANCY THAT IS A FIELD ISSUE, THE GENERAL CONTRACTOR WILL BE NOTIFIED AND BILLED FOR THE WORK. SHOULD A RETURN TRIP BE REQUIRED DUE TO ANY FIELD RELATED DISCREPANCY THAT CANNOT BE RESOLVED DURING THE SDV, THERE WILL BE ADDITIONAL TRIP CHARGES.

DURING THE SDV, CAS SERVICE WILL ADDRESS ANY DISCREPANCY THAT IS THE FAULT OF THE MANUFACTURER. SHOULD A RETURN TRIP BE REQUIRED, THE GENERAL CONTRACTOR AND APPROPRIATE SALES OFFICE WILL BE NOTIFIED. THERE WILL BE NO ADDITIONAL CHARGES FOR MANUFACTURER DISCREPANCIES.

REVISIONS

	DESCRIPTION	DATE	DRAWN
△			
△			
△			
△			

CAPTIVEAIRE
San Diego Office
www.captiveaire.com
, San Diego, CA, 92117 PHONE: (858) 273-5084 FAX: (619) 747-5615 EMAIL: regis6@captiveaire.com

Grossmont High School Rev3
1100 Murray Dr,
El Cajon, CA, 92020

DATE: 12/10/2021

DWG.#: 5226676

DRAWN BY:

SCALE: 3/4" = 1'-0"

MASTER DRAWING

SHEET NO. 15

GHS KITCHEN & WEIGHTROOM MOD: MARCH 1st DSA Submittal:

PROJECT No. :1-30-55
6/13/2022 7:47:57 AM

DRAWN BY: _____ CHECKED BY: _____
ISSUE No._____ DATE_____ DESCRIPTION_____ REVISION No._____ DATE_____ DESCRIPTION_____
ISSUE No._____ DATE_____ DESCRIPTION_____ REVISION No._____ DATE_____ DESCRIPTION_____
ISSUE No._____ DATE_____ DESCRIPTION_____ REVISION No._____ DATE_____ DESCRIPTION_____
ISSUE No._____ DATE_____ DESCRIPTION_____ REVISION No._____ DATE_____ DESCRIPTION_____

RUHNAUCLARKE.COM
3775 TENTH STREET, RIVERSIDE CALIFORNIA 92501 (951) 684 4664 / 5751 PALMER WAY, SUITE C, CARLSBAD CALIFORNIA 92010 (760) 438 5899

GHS KITCHEN & WEIGHTROOM MOD: MARCH 1st DSA Submittal
GROSSMONT HIGH SCHOOL
1100 MURRAY DR, EL CAJON, CA 92020

FOODSERVICE EXHAUST HOODS

K 8.7

1-30-55

WALK-IN DOOR NOTES:

1. EXIT DOORS SHALL BE OPERABLE FROM THE INSIDE WITHOUT THE USE OF KEY, ANY SPECIAL KNOWLEDGE OR EFFORT.
2. THE MOUNTING HEIGHT OF LATCHING HARDWARE SHALL BE 34" TO 44" A.F.F.
3. THE FORCE FOR PUSHING OR PULLING OPEN A DOOR SHALL BE AS FOLLOWS: **CBC SECTION 11B-404.2.9**.
   - INTERIOR HINGE DOORS: **5 POUNDS (22.2 N)** MAXIMUM. REQUIRED FIRE DOORS: THE MINIMUM OPENING FORCE ALLOWABLE BY THE DSA AUTHORITY, NOT TO EXCEED **15 POUNDS (66.7 N)**. THESE FORCES DO NOT APPLY TO THE FORCE REQUIRED TO RETRACT LATCH BOLTS OR DISENGAGE OTHER DEVICES THAT HOLD THE DOOR IN A CLOSED POSITION.
   - THE FORCE REQUIRED FOR ACTIVATING ANY OPERABLE PARTS, SUCH AS LEVER HARDWARE, OR DISENGAGING OTHER DEVICES SHALL BE **5 POUNDS (22.2 N)** MAXIMUM TO COMPLY WITH **CBC SECTION 11B-309.4**.
4. ALL HARDWARE SHALL MEET THE REQUIREMENTS OF CBC SECTIONS 11B-404.2.7 AND 11B-309.4
5. THRESHOLDS SHALL COMPLY WITH CBC SECTIONS 11B-404.2.5, 11B-302 AND 11B-303
6. FLOOR STOPS, WHERE SPECIFIED, SHALL NOT BE LOCATED IN THE PATH OF TRAVEL AND 4 MAXIMUM FROM WALLS.
7. CONTRACTOR SHALL COORDINATE SIGN TEXT WITH ARCHITECT.
8. SUBMIT SIGNAGE MESSAGE SCHEDULE TO DISTRICT FOR APPROVAL.
9. IDENTIFICATION SIGNAGE SHALL BE LOCATED PER ARCHITECTURAL DETAILS.

STAMPS

LICENSED ARCHITECT — ROGER CLARKE — No. C-21345 — Exp. 12-31-2023 — STATE OF CALIFORNIA

IDENTIFICATION STAMP
DIV. OF THE STATE ARCHITECT
APP: 04-120895 INC:
REVIEWED FOR
SS ☑ FLS ☑ ACS ☑
DATE: 06/27/2022
ADD'L REVIEW REQUIRED

ORNESS DESIGN GROUP INC
FOODSERVICE DESIGN
5955 MIRA MESA BLVD.
SUITE H
SAN DIEGO, CA. 92121
(858) 457-5955
CONSULTANT BRANDING

RUHNAU CLARKE ARCHITECTS

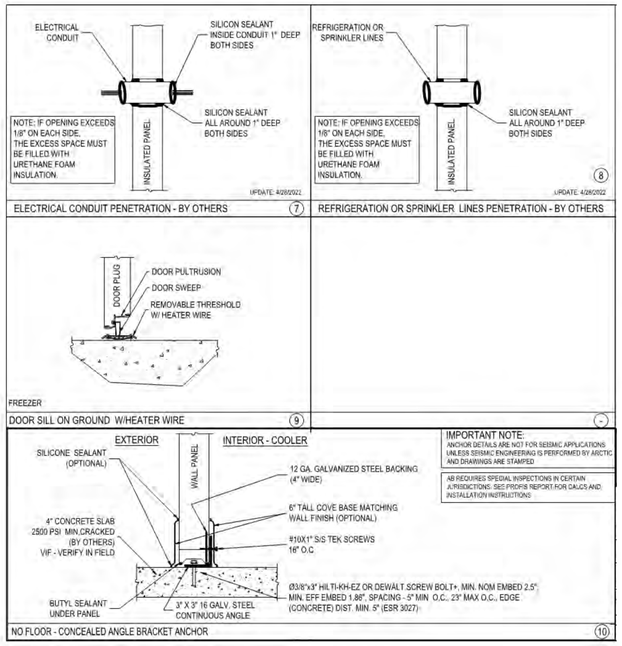

IMPORTANT NOTE:
ANCHOR DETAILS ARE NOT FOR SEISMIC APPLICATIONS UNLESS SEISMIC ENGINEERING IS PERFORMED BY ARCTIC AND DRAWINGS ARE STAMPED

AB REQUIRES SPECIAL INSPECTIONS IN CERTAIN JURISDICTIONS. SEE PROFIS REPORT FOR CALCS AND INSTALLATION INSTRUCTIONS

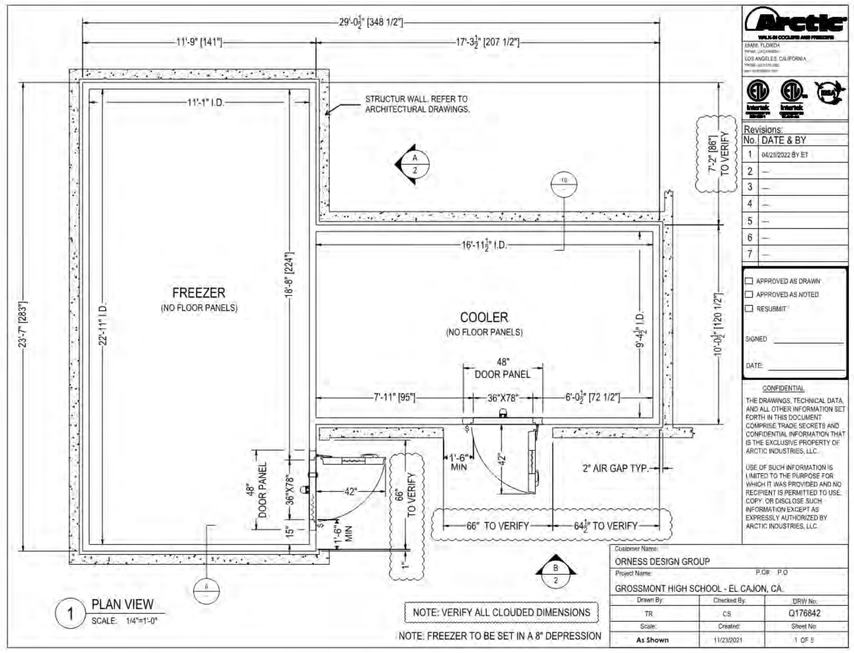

1 PLAN VIEW
SCALE: 1/4"=1'-0"

Arctic — WALK-IN COOLERS AND FREEZERS
MIAMI, FLORIDA LOS ANGELES, CALIFORNIA
PHONE: (305) 883-5581 PHONE: (626) 508-0920

Revisions:

No.	DATE & BY
1	04/29/2022 BY ET
2	—
3	—
4	—
5	—
6	—
7	—

☐ APPROVED AS DRAWN
☐ APPROVED AS NOTED
☐ RESUBMIT
SIGNED
DATE:

CONFIDENTIAL
THE DRAWINGS, TECHNICAL DATA, AND ALL OTHER INFORMATION SET FORTH IN THIS DOCUMENT COMPRISE TRADE SECRETS AND CONFIDENTIAL INFORMATION THAT IS THE EXCLUSIVE PROPERTY OF ARCTIC INDUSTRIES, LLC.

USE OF SUCH INFORMATION IS LIMITED TO THE PURPOSE FOR WHICH IT WAS PROVIDED AND NO RECIPIENT IS PERMITTED TO USE, COPY, OR DISCLOSE SUCH INFORMATION EXCEPT AS EXPRESSLY AUTHORIZED BY ARCTIC INDUSTRIES, LLC.

Customer Name: ORNESS DESIGN GROUP
Project Name: P.O#: P.O
GROSSMONT HIGH SCHOOL - EL CAJON, CA.

Drawn By:	Checked By:	DRW No:
TR	CS	Q176842
Scale:	Created:	Sheet No:
As Shown	11/23/2021	1 OF 5

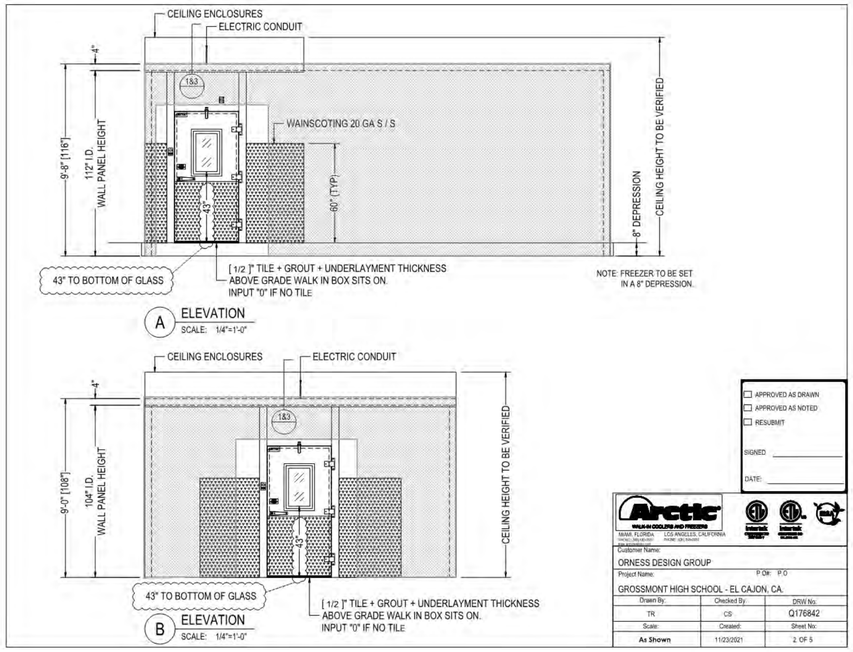

A ELEVATION
SCALE: 1/4"=1'-0"

B ELEVATION
SCALE: 1/4"=1'-0"

☐ APPROVED AS DRAWN
☐ APPROVED AS NOTED
☐ RESUBMIT
SIGNED
DATE:

Arctic — WALK-IN COOLERS AND FREEZERS
MIAMI, FLORIDA LOS ANGELES, CALIFORNIA
PHONE: (305) 883-5581 PHONE: (626) 508-0920
Customer Name: ORNESS DESIGN GROUP
Project Name: P.O#: P.O
GROSSMONT HIGH SCHOOL - EL CAJON, CA.

Drawn By:	Checked By:	DRW No:
TR	CS	Q176842
Scale:	Created:	Sheet No:
As Shown	11/23/2021	2. OF 5

CONSTRUCTION: 4" POLYURETHANE FOAM IN PLACE PANELS, R-VALUE R28 FOR COOLER AND R32 FOR FREEZER, ASTM E84 / UL 723 INNER FOAM CORE: FLAME SPREAD ≤25, SMOKE DEVELOPED ≤450

PANEL FINISHES

WALL INTERIOR: ACRYLUME OR G90 GALVANIZED - 26 GA - STUCCO EMBOSSED
WALL EXTERIOR: ACRYLUME OR G90 GALVANIZED - 26 GA - STUCCO EMBOSSED
WALL EXPOSED: STAINLESS STEEL 304 - 22 GA - #4 FINISH

CEILING - STANDARD:
CEILING INTERIOR: G90 GALVANIZED - 26 GA - STUCCO EMBOSSED - WHITE
CEILING EXTERIOR: ACRYLUME OR G90 GALVANIZED - 26 GA - STUCCO EMBOSSED

DOOR DESCRIPTION

FREEZER DOOR:
INTERIOR FINISH: STAINLESS STEEL 304 - 20 GA - #4 FINISH
EXTERIOR FINISH: STAINLESS STEEL 304 - 20 GA - #4 FINISH

COOLER DOOR:
INTERIOR FINISH: STAINLESS STEEL 304 - 20 GA - #4 FINISH
EXTERIOR FINISH: STAINLESS STEEL 304 - 20 GA - #4 FINISH

ACCESSORIES:

HINGE 1295 - CAM LIFT - BRUSHED CHROME (3)
DOOR CLOSER 1064 - WHOOK – BRUSHED CHROME
HANDLE 1229C - KEY LOCK - BRUSHED CHROME
DIAMOND TREAD KICKPLATE – 36" HIGH - INT/EXT
LIGHT 1804LG – VAPOR PROOF
LIGHT/THERMOMETER – LED – SINGLE POLE (#1)
(1) LIGHT - SAFETY NIGHT
HEATED PRESSURE RELIEF PORT 1925 – 115V FREEZER ONLY
HEATER – DOOR FRAME FREEZER ONLY
THERMOSTAT – PER-9 FREEZER ONLY
CONDUIT THROUGH TOP OF DOOR (PER DOOR)
14" X 24" HEATED GLASS VISION PANEL, TRIPLE PANE - FREEZER
14" X 24" HEATED GLASS VISION PANEL, TRIPLE PANE – COOLER

WALK-IN ACCESSORIES

(2) - EA AIR CURTAIN, PLASTIC STRIP (UP TO 41" X 80" DOOR)
(5) - EA LED 4' LIGHT FIXTURE (5)
(40) - SQ.FT TRIM STRIPS - MATCHING EXTERIOR FINISH
(10) - SQ.FT CLOSURE PANELS - MATCHING EXTERIOR FINISH
(115) - FT NSF COVE BASE - MATCHING FINISH MATERIAL – 6" HIGH - INT.
(8) - FT NSF COVE BASE - MATCHING FINISH MATERIAL – 6" HIGH - EXT
(38) - FT WAINSCOTING - 20 GA STAINLESS STEEL - 60" ON WALL (SHIPPED LOOSE)
(276) - SQ.FT. (4") MASS INSULATION AND VISQUEEN
(2) - DOOR SLAM BRACES 2" x 2" x 6" W/ (4) 3/16" x 1-3/4" LONG HEX HEAD TAPCON ANCHORS & (4) #8 X 1" SMS

SEISMIC PROVISIONS INCLUDED

GENERAL NOTES

FLOOR MUST BE LEVEL WITHIN 3/16" PER 10', SMOOTH, AND CLEAR OF OBSTRUCTIONS PRIOR TO INSTALLING WALK-IN PANELS.

A 2" MINIMUM GAP ALL AROUND WALK-IN IS REQUIRED FOR PROPER AIR CIRCULATION. HIGH HUMIDITY ENVIRONMENTS MAY REQUIRE FORCED VENTILATION IN GAP TO PREVENT CONDENSATION.

FLOOR PANELS (WHEN PROVIDED) ARE DESIGNED TO WITHSTAND A 600 POUND PER SQUARE FOOT STATIONARY LOAD. DAMAGE DUE TO FORKLIFTS, PALLET JACKS, CARTS, OR ANY TYPE OF ROLLING TRAFFIC IS NOT COVERED BY WARRANTY.

STANDARD PANELS HAVE A STUCCO-EMBOSSED FINISH (TEXTURE) THAT HELPS REDUCE IRREGULARITIES IN THE PANEL SURFACE. ON REQUEST WE WILL PROVIDE A NON-TEXTURED (SMOOTH FINISH). SMOOTH FINISH PANELS TYPICALLY EXPERIENCE WRINKLING AND OTHER FLATNESS IMPERFECTIONS SUCH AS OIL-CANNING WHICH IS NOT COVERED BY WARRANTY.

WALK-IN ROOF IS NOT DESIGNED FOR FOOT TRAFFIC OR STORAGE. SNOWMICE LOADS (OUTDOOR BOXES): TO AVOID CEILING FAILURE/COLLAPSE DUE TO SNOW OR ICE (NOT COVERED BY PANEL WARRANTY), SNOW OR ICE ACCUMULATION OF MORE THAN 3" MUST BE CAREFULLY REMOVED IN A MANNER WHICH DOES NOT CAUSE DAMAGE OR TEAR THE MEMBRANE ROOF COVER.

FOR QUARRY TILE OR CONCRETE FLOORS, THE METAL FACING MAY BE SUSCEPTIBLE TO STAINING DUE TO MOISTURE CREATED BY HYDRATION OF CONCRETE-TYPE MATERIALS. EACH KOOM MUST BE PROPERLY VENTILATED AND SPECIAL PRECAUTIONS TAKEN WHEN USING MURIATIC ACID DUE TO ITS EFFECTS ON ALUMINUM, GALVANIZED STEEL, AND STAINLESS STEEL.

METAL SURFACE MUST BE PROTECTED FROM LIME AND CONCRETE RELATED COMPONENTS. PROTECTION OF ONE OF THE FOLLOWING TYPES MUST BE APPLIED BETWEEN THE CONCRETE AND METAL SURFACES: LIQUID TAR BRUSHED OR SPRAYED ABOVE THE CONCRETE LINE, HEAVY EPOXY PAINT, 6 MIL POLYETHYLENE, OR A DOUBLE LAYER OF 30 LB ASPHALT IMPREGNATED ROOFING PAPER.

REFRIGERATION BY OTHERS

☐ APPROVED AS DRAWN
☐ APPROVED AS NOTED
☐ RESUBMIT
SIGNED
DATE:

Arctic — WALK-IN COOLERS AND FREEZERS
MIAMI, FLORIDA LOS ANGELES, CALIFORNIA
PHONE: (305) 883-5581 PHONE: (626) 508-0920
Customer Name: ORNESS DESIGN GROUP
Project Name: P.O#: P.O
GROSSMONT HIGH SCHOOL - EL CAJON, CA.

Drawn By:	Checked By:	DRW No:
TR	CS	Q176842
Scale:	Created:	Sheet No:
As Shown	11/23/2021	3 OF 5

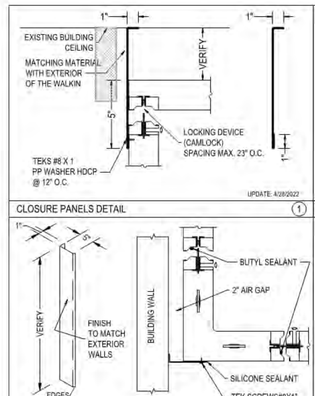

IMPORTANT NOTE:
ANCHOR DETAILS ARE NOT FOR SEISMIC APPLICATIONS UNLESS SEISMIC ENGINEERING IS PERFORMED BY ARCTIC AND DRAWINGS ARE STAMPED

AB REQUIRES SPECIAL INSPECTIONS IN CERTAIN JURISDICTIONS..SEE PROFIS REPORT FOR CALCS AND INSTALLATION INSTRUCTIONS.

☐ APPROVED AS DRAWN
☐ APPROVED AS NOTED
☐ RESUBMIT
SIGNED:
DATE:

Arctic — WALK-IN COOLERS AND FREEZERS
MIAMI, FLORIDA LOS ANGELES, CALIFORNIA
PHONE: (305) 883-5581 PHONE: (626) 508-0920
Customer Name: ORNESS DESIGN GROUP
Project Name: P.O#: P.O
GROSSMONT HIGH SCHOOL - EL CAJON, CA.

Drawn By:	Checked By:	DRW No:
TR	CS	Q176842.
Scale:	Created:	Sheet No:
As Shown.	11/23/2021	4A. OF 5.

115/60/1
SUPPLY REQUIRED

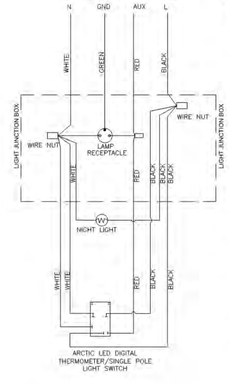

ADDITIONAL CONNECTIONS

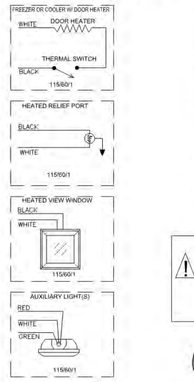

This is a 120VAC, 15 amp circuit auxiliary lights max combined draw 10 amps	
Manufacturer	Model
Keil (Component Hardware)	LED48X754
Kason	1802, 1802NL,1803, 1804, 1806, 1807, 1808, 1808NM, 1808FM, 1809, 1810EZ Series. 1810LX, 1810LC, 1820
MaxLite	LSV Series, JI Series
Osram Sylvania	30099 Series
Various	UL Listed 120VAC, no greater than 60 watts

NOTE: If Auxiliary Lights are not powered from the WB Electrical Circuit, the Red Aux Wire must be removed by Qualified Electrician

NOTE: Door Heater , Thermal Switch and Heater Relief Port are connected for Freezers only

Optional: Cooler Doors with Door Heater and Thermal Switch

ELECTRICIAN TO PROVIDE SEAL-OFFS AT EVERY CONDUIT ENTRY ON WARMER SIDE OF PANEL. SEAL INSIDE AND AROUND ALL CONDUITS WHERE PASSING TROUGHT PANELS. (SEE DETAIL PAGE)

Arctic — WALK-IN COOLERS AND FREEZERS
FLORIDA, USA (305) 883-5581
CALIFORNIA, USA (626)508-0920

WIRING DIAGRAM - SINGLE POLE SWITCH

DOOR MUST BE DISCONNECTED FROM ELECTRICAL SUPPLY FOR INSTALLATION AND ADJUSTMENTS.
CONDUIT PENETRATIONS MUST BE SEALED INTERNALLY AND EXTERNALLY WHERE THEY ENTER THE WALK-IN BOX.

5 OF 5

Update:11/29/21

GHS KITCHEN & WEIGHTROOM MOD: MARCH 1st DSA Submittal:

PROJECT No. :1-30-55
6/17/2022 8:56:23 AM

DRAWN BY: CHECKED BY:
ISSUE No.____ DATE____ DESCRIPTION____ REVISION No.____ DATE____ DESCRIPTION____
ISSUE No.____ DATE____ DESCRIPTION____ REVISION No.____ DATE____ DESCRIPTION____
ISSUE No.____ DATE____ DESCRIPTION____ REVISION No.____ DATE____ DESCRIPTION____
ISSUE No.____ DATE____ DESCRIPTION____ REVISION No.____ DATE____ DESCRIPTION____

STAMPS

IDENTIFICATION STAMP
DIV. OF THE STATE ARCHITECT
APP: 04-120895 INC:
REVIEWED FOR
SS ☑ FLS ☑ ACS ☑
DATE: 06/27/2022

ORNESS DESIGN GROUP INC
FOODSERVICE DESIGN
5955 MIRA MESA BLVD.
SUITE H
SAN DIEGO, CA, 92121
(858) 457-5955

CONSULTANT BRANDING

RUHNAU CLARKE ARCHITECTS

MODEL NO. ZS1-02Z-CT3-AST OUTDOOR AIR COOLED REFRIGERATION SYSTEM
ITEM NO. 12

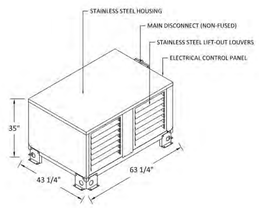

NOTE:
- CRANKCASE HEATERS
- FAN CYCLING SWITCHES
- COATED CONDENSERS
- ENAMEL COATED ROTO-LOCK SERVICE VALVES

RACK WEIGHT: 535 LBS.

ENGINEERING SUMMARY

POWER SUPPLY: 208-230/60/3
CONNECTED LOAD: 30.6 AMPS

MOPD: 50 AMP
MINIMUM CIRCUIT AMPACITY: 36.0

SYSTEM	ITEM #	DESCRIPTION	FIXTURES TEMP °F FIXT.	FIXTURES TEMP °F SUCT.	FIXTURES REQ'D FIXTURE BTU/H	FIXTURES REFRIG.	CONDENSING UNIT MODEL NO.	H.P.	COMPRESSOR RATING @ 60 HZ RLA	V	PH	BTU CAP @ AMB °F 100	TYPE	REC. CAP. (lbs)	CONDENSER
A	12	WALK-IN FREEZER	-10	-20	16558	448A	ZF13E4E	6.0	21.5	208	3	18100	Z	10.0	L4R
B	12	WALK-IN COOLER	35	25	10549	448A	ZS09K4E	1.3	9.1	208	3	10800	Z	10.0	L1R

SYSTEM	ITEM #	EVAPORATOR COILS MODEL NO.	QTY	FAN MOTORS @ 60 HZ RLA	V	PH	HEATERS @ 60 HZ RLA	V	PH	DEFR. TYPE	DEFROST CONTROLLER TYPE	CONTROLLER QTY	ACCESSORIES T/STAT	SOL. VALVE	EXP. V.V.	REFRIGERANT LINE SIZES (IN) SUCT.	SUCT. RISER	LIQUID	LINE FLOW (TONS)	TYPE	TOTAL SYSTEM LOAD
A	8	BELG155	1	1.5	208	1	13.7	208	1	ELEC.	ECOSMART	1	F	F	EF	1-3/8	1-1/8	3/8	100	M	21.5
B	11	BELG095	1	1.8	115	1				O.C.	ECOSMART	1	F	F	EF	7/8	5/8	3/8	100	M	9.1

ALL EVAPORATOR COILS WILL REQUIRE A HOUSE POWER SUPPLY

c UL us LISTED

NOTE:
IT IS THE INSTALLING CONTRACTORS RESPONSIBILITY TO FOLLOW ALL APPLICABLE CODES AND CURRENT REFRIGERATION INDUSTRY STANDARDS AND PRACTICES WHEN DETERMINING LINE SIZES, AND INSTALLING AND STARTING UP RDT EQUIPMENT.

COMPRESSOR TYPE
Z SCROLL

DEFROST TYPE
O.C. OFF CYCLE
ELEC ELECTRIC

LINE TYPE
M MAIN - UP TO 100'

EVAPORATOR ACCESSORIES
EF EEV FACTORY EQUIPPED ON EVAP
F FACTORY EQUIPPED ON EVAP

PLANVIEW/ CLEARANCE REQUIREMENTS

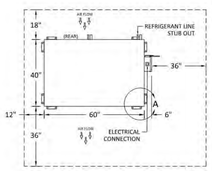

NOTE: MINIMUM CLEARANCE REQUIRED FOR PROPER OPERATION

NOTE: ROOF CURB OR GROUND PAD CAN BE SAME SIZE AS OUTDOOR UNIT

SUCTION LINE VERTICAL RISE DETAIL

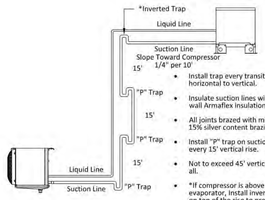

- Install trap every transition from horizontal to vertical.
- Insulate suction lines with 3/4" wall Armaflex insulation.
- All joints brazed with minimum 15% silver content brazing rod.
- Install "P" trap on suction line every 15' vertical rise.
- Not to exceed 45' vertically over all.
- *If compressor is above the evaporator, Install inverted trap on top of the rise to prevent oil from seeping down when fixture(s) is turned off.

EVAPORATOR DETAILS - MODEL BEL

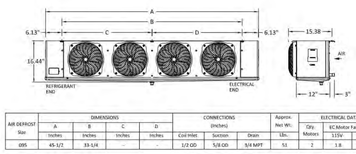

AIR DEFROST Size	DIMENSIONS A	B	C	D	CONNECTIONS (inches) Cold Inlet	Suction	Drain	Approx. Net Wt. Lbs.	ELECTRICAL DATA Qty. Motors	EC Motor Fan Amps 115V	208V
	Inches	Inches	Inches	Inches							
095	45-1/2	33-1/4	-	-	1/2 OD	5/8 OD	3/4 MPT	51	2	1.8	1.0

ELECTRIC DEFROST	DIMENSIONS A	B	C	D	CONNECTIONS (inches) Cold Inlet	Suction	Drain	Approx. Net Wt. Lbs.	ELECTRICAL DATA Qty. Motors	EC Motor Fan Amps	Heater Amps as wired for: 208-230/60/1	208-230/60/3	460/60/3
	Inches	Inches	Inches	Inches									
155	61-1/2	49-1/4	-	-	1/2 OD	1-1/8 OD	3/4 MPT	78	3	1.5	13.7	8.5	6.8

ZS SERIES ENGINEERING SPECIFICATIONS

Multi compressor, outdoor, air cooled. The refrigeration package shall be a pre-engineered and factory-assembled unit, trade name "ZS", as manufactured by Refrigeration Design Technologies, 1808 FM Road 66, P.O. Box 622, Waxahachie, Texas 75168. Phone: (972) 937-3215; Fax: (972) 937-0970.

1. Air-Cooled Refrigeration System
The RDT UL Listed "Air-Cooled" Refrigeration system shall be housed in a weather-protected compact powder-coated steel frame. The entire housing shall be brushed stainless steel. The unit shall include an air-cooled aluminum fin copper tube condenser designed to operate at 15 degrees TD. The exterior housing shall feature stainless steel one piece louvers. Lifting points shall be integrated in the framing component. Condenser fan motors shall be mounted within the enclosure. The condenser intake surface shall be protected with stainless steel expanded metal guard to protect against vandalism and hail damage.

Each unit shall be equipped with a ball-bearing fan motor, suction filter, sight glass, liquid filter/drier, liquid line inlet and outlet valve, defrost cycle and high pressure super-hose connections. Each unit shall be equipped with fan cycling controls and/or head pressure regulator where required for low ambient conditions.

Condensing unit shall contain scroll, hermetic, semi-hermetic, and/or discus type compressor(s) assembled to operate with the refrigerant specified for both medium and low temperature applications.

2. Evaporator Coils
A. Evaporator coils shall be direct expansion type fabricated of copper tubes with aluminum fins.
B. All evaporator coils shall be provided with solenoid valve, thermostatic or electronic expansion valve and thermostat.

3. Pre-Piping
All refrigerant lines shall be extended to outside of the housing in a neat and orderly manner. All tubing shall be securely supported and anchored with non-corrosive coated clamps.

All joints must be brazed, not soldered.

All piping and controls shall be factory pressure-tested with dry nitrogen.

4. Control Panel
The package shall have a factory-mounted and pre-wired control panel, with main disconnect (non fused) where required, circuit breakers, contactors wired for single point power connection.

General Information
Contractors shall verify all dimensions onsite and coordinate with other trades.

General contractor shall prepare the platform, curbed openings and weatherproofing the unit after installation.

Refrigeration Contractor.
All copper tubing to be refrigerant grade. A.C.R. or type "L".

Brazing should be used for all refrigerant piping. Silver solder or soft solder is not acceptable.

All piping to be pressure tested with nitrogen at 300 psi. After the condensing unit and coil have been connected the balance of the system shall be leak tested with the valves open at 200 psi.

The complete system shall be evacuated with a vacuum pump. Each unit should be charged tested and adjusted to assure operation.

Contractor should provide and install the drain-line heater in freezer. Heater shall be connected by electrical contractor. Seal all penetrations through the walk-in units with foam.

Electrical Contractor
Electrical contractor to provide power for refrigeration package and connect control and defrost system as called for in the wiring diagram.

Electrical contractor to connect drain-line heater in the freezer.

All electrical wiring and installation shall be in accordance with the wiring diagram and local codes. Seal all penetrations through the walk-in units with foam.

Plumbing Contractor
Plumbing contractor to provide copper drain lines for walk-in refrigerator and freezer, pitched 1/4" per foot of run. Trap drain-line outside of refrigerated space to avoid entrance of warm, moist air.

All plumbing installation shall be in accordance with local codes..

EVAPORATOR MOUNTING DETAIL (TYPICAL)

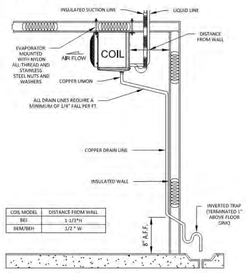

COIL MODEL	DISTANCE FROM WALL
BEL	1-1/2"H
WM/BEH	1/2" W

EVAPORATOR PLACEMENT & CLEARANCE REQUIREMENTS LOW PROFILE EVAPORATOR COILS (I.E. - BEL)

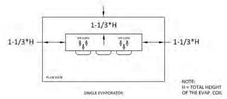

NOTE:
H = TOTAL HEIGHT OF THE EVAP. COIL

WIRING DIAGRAM - ECO-SMART - AKOA1AE DEMAND DEFROST CONTROLLER FOR WALK-IN COOLER WITH ONE COIL 115/60/1

*REFERENCE ENGINEERING SUMMARY FOR COIL AMP DRAWS.

ITEM	DESCRIPTION	VOLTAGE
12	WALK-IN COOLER	115/1

Note: Controller provided pre-mounted to housing of evaporator assembly.

Wiring Schedule for Electrical Contractor Requirements:

PRIMARY COIL
(2) 115V 12AWG MIN. TO PROVIDE HOUSE POWER TO THE COIL (HOT, NEUTRAL, GROUND)

FACTORY WIRING _____
FIELD WIRING - - - - - - - - -

WIRING DIAGRAM - ECO-SMART - AKOB1EE DEMAND DEFROST CONTROLLER FOR WALK-IN FREEZER WITH ONE COIL 208-230/60/1

*REFERENCE ENGINEERING SUMMARY FOR COIL AMP DRAWS.

ITEM	DESCRIPTION	VOLTAGE
8	WALK-IN FREEZER	208/1

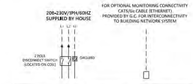

Note: Controller provided pre-mounted to housing of evaporator assembly.

Wiring Schedule for Electrical Contractor Requirements:

PRIMARY COIL
(3) 208V (AWG SIZE ACCORDING TO HEATER LOAD AND LOCAL CODE) TO PROVIDE HOUSE POWER TO THE COIL (L1, L2 AND GROUND)

FACTORY WIRING _____
FIELD WIRING - - - - - - - - -

APPROVAL STATUS

THIS DRAWING REPRESENTS OUR UNDERSTANDING OF THE SPECIFICATIONS. PLEASE REVIEW IT CAREFULLY FOR ACCURACY. CLEARLY AND IN DETAIL NOTE CHANGES REQUIRED.

MARK APPROPRIATE BOX, SIGN, AND DATE BELOW.

- ☐ APPROVED FOR FABRICATION NO CHANGES
- ☐ APPROVED FOR FABRICATION WITH CHANGES NOTED
- ☐ REVISE AND RE-SUBMIT DRAWING

BY: _____ DATE: _____

NOTICE

THIS DRAWING BEING AN INSTRUMENT OF SERVICE IS AND WILL REMAIN PROPERTY OF REFRIGERATION DESIGN TECHNOLOGIES AND CANNOT BE USED WITHOUT WRITTEN AUTHORIZATION.

No.	Revision/Issue	Date
0	ORIGINAL ISSUE	11-19-21

REFRIGERATION DESIGN TECHNOLOGIES
1808 FM Road 66 / P.O. Box 622
Waxahachie, Texas
(800) 736-6518
www.rdtonline.com

Consultant:
Orness Design Group Inc.
San Diego, CA

Dealer
-
-

Grossmont High School
El Cajon, CA

Project No: 26628
Designed By: M. Willert
Drawn By: M. Willert
Sheet 1.1 of sheets

GHS KITCHEN & WEIGHTROOM MOD: MARCH 1st DSA Submittal:

PROJECT No. :1-30-55
6/13/2022 7:48:00 AM

DRAWN BY: _____ CHECKED BY: _____

ISSUE No.____	DATE_____	DESCRIPTION_____		REVISION No.____	DATE_____	DESCRIPTION_____	
ISSUE No.____	DATE_____	DESCRIPTION_____		REVISION No.____	DATE_____	DESCRIPTION_____	
ISSUE No.____	DATE_____	DESCRIPTION_____		REVISION No.____	DATE_____	DESCRIPTION_____	
ISSUE No.____	DATE_____	DESCRIPTION_____		REVISION No.____	DATE_____	DESCRIPTION_____	